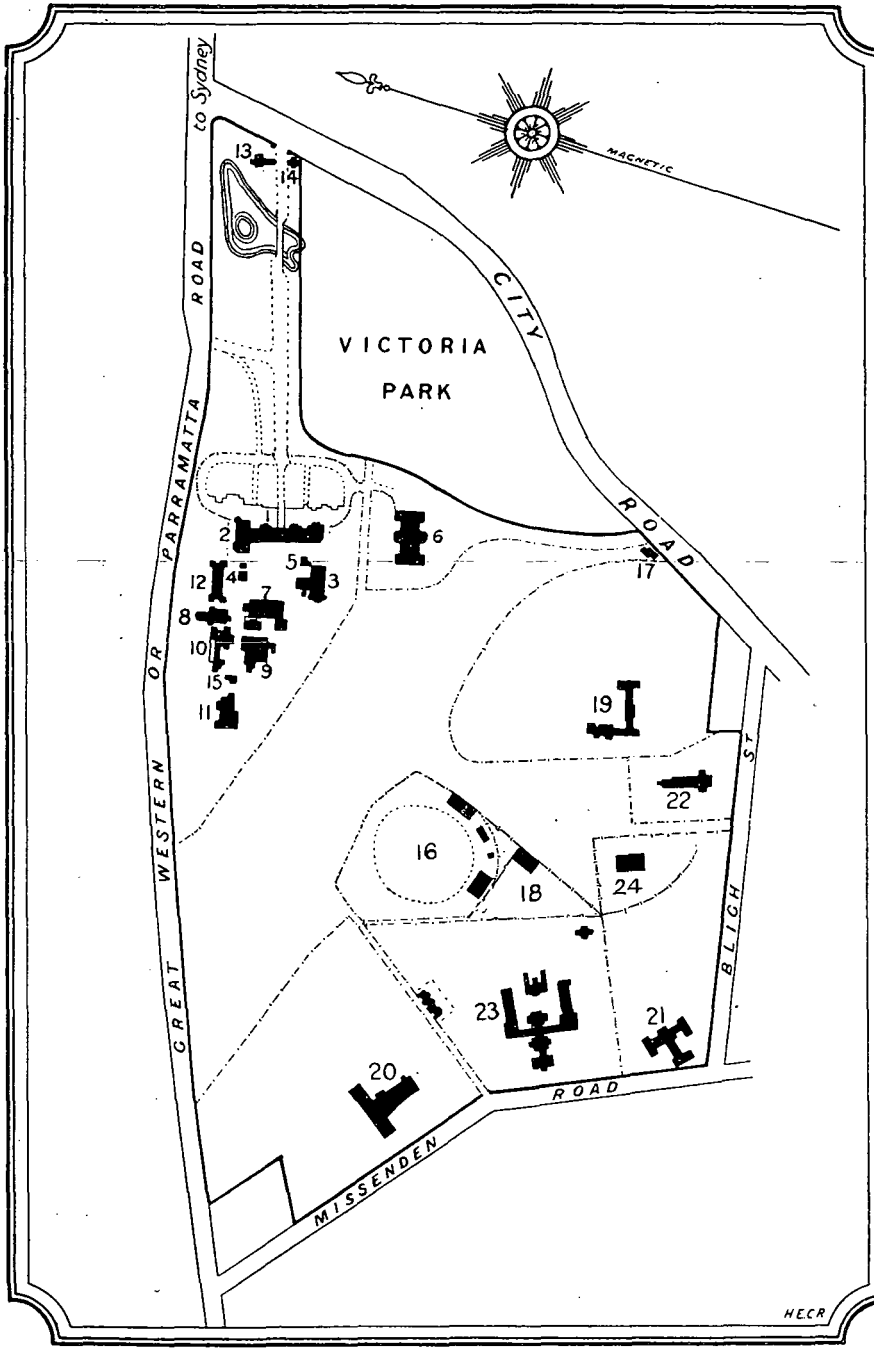
to Sydney
MAGNETIC
VICTORIA
PARK
CITY
ROAD
GREAT WESTERN OR PARRAMATTA ROAD
BLIGH ST
MISSENDEN ROAD
1
2
3
4
5
6
7
8
9
10
11
12
13
14
15
16
17
18
19
20
21
22
23
24
H.E.C.R

KEY TO THE PLAN OF THE SYDNEY UNIVERSITY AND GROUNDS.

1. University Main Building
2. Great Hall
3. Fisher Library
4. Men's Common Room
5. Women's Common Room
6. Medical School
7. Department of Chemistry, Metallurgy, Assaying and Mining
8. Department of Geology and School of Mines
9. Department of Physics
10. Department of Engineering
11. Department of Biology
12. Macleay Museum
13. Gardener's Lodge
14. Messenger's Lodge
15. Caretaker's Lodge
16. University Oval
17. Attendant's Lodge
18. Tennis Courts
19. St. Paul's College
20. St. John's College
21. St. Andrew's College
22. Women's College
23. Royal Prince Alfred Hospital
24. Principal's Residence, St Andrew's College

CALENDAR

OF THE

UNIVERSITY OF SYDNEY

FOR THE YEAR

1906

SYDNEY
ANGUS AND ROBERTSON
PUBLISHERS TO THE UNIVERSITY
1906

TABLE OF CONTENTS.

INDEX.

PREFACE.

THE UNIVERSITY OF SYDNEY was incorporated by an Act of the Legislature of New South Wales, which received the Royal Assent on the 1st of October, 1850. The objects set forth in the preamble are—"The advancement of religion and morality and the promotion of useful knowledge." By this Act it is empowered to confer, after examination, Degrees in Arts, Law and Medicine, and is endowed with an annual income of £5000. By the University and University Colleges Amendment Act, 1902, the statutory annual endowment was increased to £10,000.

By the University Extension Act of 1884 the Senate is empowered to give instruction, and to grant such Degrees and Certificates in the nature of Degrees, as it shall think fit, in all branches of knowledge, except Theology and Divinity. The same Act admits women to all University privileges equally with men.

The various Acts of Parliament relating to the University and Colleges have been superseded by the University and University Colleges Act, 1900.

By a Royal Charter issued 7th February, 1858, the same rank, style, and precedence are granted to Graduates of the University of Sydney as are enjoyed by Graduates of Universities within the United Kingdom.

The government of the University is vested in a Senate, consisting of sixteen elective Fellows, and not fewer than three nor more than six "*ex officio*" members, being professors of the University, in such branches of learning as the Senate may from time to time select. Under this power the Professors of Modern Literature, Geology, Physiology, and Law have been constituted "*ex officio*" members of the Senate for the time being. A Chancellor and Vice-Chancellor are elected by the Senate from their own body.

Vacancies in the Senate are filled by means of a convocation of electors, consisting of the Fellows of the Senate for the time being, Professors, Public Teachers and Examiners in the Schools of the University, Principals of Incorporated Colleges within the University, Superior Officers declared to be such by By-law, Masters and Doctors in any Faculty, and Bachelors of three years' standing.

There are four Faculties in the University, viz., Arts, Law, Medicine and Science.

In the Faculty of Arts two Degrees are given—namely, Bachelor of Arts and Master of Arts. The curriculum of study for the Degree of B.A. extends over a period of three years, during which students are required to attend lectures and pass examinations. The subjects of study are the English, Latin, Greek, French and German Languages, Ancient and Modern History, Mental Philosophy and Logic, Mathematics, Chemistry, Physics, Geology and Palæontology, Biology, Physiology, &c.

In the Faculty of Law theDegrees of LL.B. and LL.D. are given. The curriculum of study for the Degree of LL.B. extends over five years. The Degree of Bachelor of Law is recognised under certain conditions by the Board for the admission of Barristers in New South Wales as a qualification for admission to the Bar.

In the Faculty of Medicine three Degrees are granted, viz., Bachelor of Medicine, Doctor of Medicine, and Master of Surgery. The course of study for the Degrees of M.B. and Ch.M. extends over a period of five years.

The colony of New South Wales has been declared to be one of the British possessions to which the Imperial Medical Act of 1886 applies, and the Degrees in Medicine and Surgery granted by the University of Sydney are registered upon the Colonial List of the British Medical Register, under section 13 of that Act.

The University of Sydney is recognised as one of the Institutions from which the University of London is authorised to receive certificates for Degrees in Medicine. The University of Edinburgh accepts certificates of attendance on Medical Classes in this University to the extent of three years of professional study, and the Royal College of Surgeons extends a similar recognition to attendance on the classes of the whole course, in the case of Graduates in Medicine who present themselves for examination for the Diploma of Member of the College.

In the Faculty of Science the Degrees of Bachelor of Science and Doctor of Science are given, and Degrees are also given in the several branches of Engineering, viz., Civil Engineering, Mechanical and Electrical Engineering, and Mining and Metallurgy. The course for the Degree of B.Sc. extends over a period of three years, during which the subjects of study are Mathematics, Chemistry (theoretical and practical), Physics (theoretical and practical), Mineralogy, Geology and Palæontology, Biology, etc. The curriculum in Civil Engineering covers three years, and in the other two departments four years.

This University has been placed upon the list of institutions recognised by the Institute of Chemistry of Great Britain for the training of candidates for the examinations of the Institute.

In the School of Dentistry the curriculum extends over a period of four years, leading to the Degree of Bachelor of Dental Surgery.

The Universities of Oxford and Cambridge extend certain privileges to students who have completed two years' study in the University of Sydney and who desire to compete in the Examinations for Honours. Graduates of the University of Sydney who comply with certain requirements may be admitted as "advanced students" in the University of Cambridge. "Advanced students" may, under special conditions, proceed to the Degree of Bachelor of Arts or Bachelor of Law in that University, or obtain a certificate testifying to their proficiency in research.

Courses of Lectures in connection with the scheme for University Extension are delivered in Sydney and other places upon application. Each course consists of six or ten lectures, and concludes with an examination. Those persons who have attended any course regularly, and passed the concluding examination, receive University Certificates to that effect. The subjects of the lectures have hitherto been English Literature, Modern History, Ancient History, Political Economy, Logic and Mental Philosophy, Commercial Law, etc.

Senior and Junior Public Examinations are held annually in Sydney, and at other places where persons approved by the Senate can be found to superintend the examinations.

The lectures of the Professors are open to persons not members of the University, upon payment of the fee prescribed for each course.

Undergraduates and Graduates of other Universities are admitted *ad eundem statum* and *gradum* under certain regulations prescribed by the By-laws.

The object of the Sydney University is to supply the means of a liberal education to "all orders and denominations, without any distinction whatever."

An Act to provide for the establishment of Colleges in connection with different religious denominations was passed by the Legislature during the Session of 1854. Ample assistance was offered towards their endowment; and the maintenance of the fundamental principles of the University—*the association of students without respect of religious creeds, in the cultivation of secular knowledge*—is secured consistently with the most perfect independence of the College authorities within their own walls. Colleges in connection with the Church of England, the Roman Catholic and Presbyterian Churches, and a College for Women, have been established.

An account of the several Scholarships and other Prizes for proficiency which have been established out of the funds of the University, or have been founded by private benefactions, will be found in this Calendar.

Graduates in Arts of this University enjoy certain privileges granted by Act of Parliament, exempting them from all examinations other than an Examination in Law before admission as Barristers of the Supreme Court. The Rules of the Supreme Court also provide for a shortening of the period of Studentship-at-Law, in the case of Graduates in Arts, from three years to two, one of which may be concurrent with the final year of studentship at the University. Graduates who enter into articles of clerkship with attorneys and solicitors are only required to serve for three years instead of five.

At the yearly Examinations of 1882, women were first admitted to Matriculation in pursuance of a resolution passed to that effect by the Senate on the 1st of June, 1881. The University Extension Act of 1884 provides that "the benefits and advantages of the University, and the provisions of the Acts relating thereto, shall be deemed to extend in all respects to women equally with men."

SYDNEY UNIVERSITY CALENDAR.

1906-1907.

Sydney University Calendar.

1906.

MARCH XXXI.

1	Th	
2	F	
3	S	
4	**S**	First Sunday in Lent.
5	M	LENT TERM begins. Senate meets. University Examinations
6	Tu	[begin, viz., MATRICULATION PASS Examination, ENTRANCE
7	W	[Examination for LAW, MEDICINE and SCIENCE, DEFERRED
8	Th	[ANNUAL PASS Examinations, HONOUR Examinations in the
9	F	[Faculty of Arts, and DEPARTMENT OF ENGINEERING. P. N.
10	S	[RUSSELL SCHOLARSHIP Examination. Latest date for receiving
11	**S**	[Competitive Prize Compositions.
12	M	Second Sunday in Lent.
13	Tu	Examinations for Higher Degrees begin.
14	W	
15	Th	
16	F	
17	S	
18	**S**	Third Sunday in Lent.
19	M	Lectures begin.
20	Tu	
21	W	
22	Th	
23	F	[LATION Examination on April 2nd.
24	S	Latest date for receiving entries for the LAW MATRICU-
25	**S**	Fourth Sunday in Lent.
26	M	
27	Tu	
28	W	
29	Th	
30	F	
31	S	

Sydney University Calendar.

1906.

APRIL XXX.

1	**S**	Fifth Sunday in Lent.
2	M	Senate meets. LAW MATRICULATION Examination.
3	Tu	
4	W	
5	Th	
6	F	
7	S	
8	**S**	Palm Sunday.
9	M	
10	Tu	
11	W	
12	Th	
13	F	Good Friday.
14	S	
15	**S**	Easter Day.
16	M	
17	Tu	
18	W	
19	Th	
20	F	
21	S	
22	**S**	First Sunday after Easter.
23	M	
24	Tu	
25	W	
26	Th	
27	F	[Examination on June 5th.
28	S	Last day for receiving applications for LOCAL JUNIOR
29	**S**	Second Sunday after Easter.
30	M	

Sydney University Calendar.

1906.

MAY XXXI.

1	Tu	
2	W	
3	Th	
4	F	
5	S	
6	**S**	Third Sunday after Easter.
7	M	Senate meets.
8	Tu	
9	W	
10	Th	
11	F	Last day for receiving entries for the JUNIOR PUBLIC
12	S	[Examination on June 5th.
13	**S**	Fourth Sunday after Easter.
14	M	
15	Tu	
16	W	
17	Th	
18	F	
19	S	
20	**S**	Rogation Sunday.
21	M	
22	Tu	
23	W	
24	Th	Ascension Day.
25	F	
26	S	LENT TERM ends.
27	**S**	Sunday after Ascension.
28	M	
29	Tu	
30	W	
31	T	

Sydney University Calendar.

1906.

JUNE XXX.

1	F	
2	S	
3	**S**	Whit Sunday
4	M	Senate meets.
5	Tu	JUNIOR PUBLIC Examination begins.
6	W	
7	Th	
8	F	
9	S	
10	**S**	Trinity Sunday.
11	M	TRINITY TERM begins.
12	Tu	
13	W	
14	Th	
15	F	
16	S	
17	**S**	First Sunday after Trinity.
18	M	
19	Tu	
20	W	
21	Th	
22	F	
23	S	
24	**S**	Second Sunday after Trinity.
25	M	
26	Tu	
27	W	
28	Th	
29	F	
30	S	

Sydney University Calendar.

1906.

JULY XXXI.

1	**S**	Third Sunday after Trinity.
2	M	Senate meets.
3	Tu	
4	W	
5	Th	
6	F	
7	S	
8	**S**	Fourth Sunday after Trinity.
9	M	
10	Tu	
11	W	
12	Th	
13	F	
14	S	
15	**S**	Fifth Sunday after Trinity.
16	M	
17	Tu	
18	W	
19	Th	
20	F	
21	S	
22	**S**	Sixth Sunday after Trinity.
23	M	
24	Tu	
25	W	
26	Th	
27	F	
28	S	
29	**S**	Seventh Sunday after Trinity.
30	M	
31	Tu	

Sydney University Calendar.

1906.

AUGUST XXXI.

1	W	
2	Th	
3	F	
4	S	
5	**S**	Eighth Sunday after Trinity.
6	M	Senate meets.
7	Tu	
8	W	
9	Th	
10	F	
11	S	
12	**S**	Ninth Sunday after Trinity.
13	M	
14	Tu	
15	W	
16	Th	
17	F	Second Degree Examination in MEDICINE.
18	S	TRINITY TERM ends.
19	**S**	Tenth Sunday after Trinity.
20	M	
21	Tu	
22	W	
23	Th	
24	F	
25	S	
26	**S**	Eleventh Sunday after Trinity.
27	M	
28	Tu	
29	W	
30	Th	
31	F	

Sydney University Calendar.

1906.

SEPTEMBER XXX.

1	S	
2	**S**	Twelfth Sunday after Trinity.
3	M	Senate meets.
4	Tu	
5	W	
6	Th	
7	F	
8	S	
9	**S**	Thirteenth Sunday after Trinity.
10	M	
11	Tu	
12	W	
13	Th	
14	F	
15	S	
16	**S**	Fourteenth Sunday after Trinity.
17	M	
18	Tu	
19	W	
20	Th	
21	F	
22	S	
23	**S**	Fifteenth Sunday after Trinity.
24	M	MICHAELMAS TERM begins.
25	Tu	
26	W	
27	Th	[Examinations on November 13th.
28	F	[and MATRICULATION HONOUR and SCHOLARSHIP
29	S	Latest date for receiving applications for Local SENIOR
30	**S**	Sixteenth Sunday after Trinity.

Sydney University Calendar.

1906.

OCTOBER XXXI.

1	M	
2	Tu	
3	W	
4	Th	
5	F	
6	S	
7	**S**	Seventeenth Sunday after Trinity.
8	M	Senate meets.
9	Tu	
10	W	
11	Th	
12	F	
13	S	
14	**S**	Eighteenth Sunday after Trinity.
15	M	
16	Tu	
17	W	
18	Th	[Examinations on November 13th.
19	F	[nation, and MATRICULATION HONOUR and SCHOLARSHIP
20	S	Latest date for receiving entries for the SENIOR PUBLIC Exami-
21	**S**	Nineteenth Sunday after Trinity.
22	M	
23	Tu	
24	W	
25	Th	
26	F	
27	S	
28	**S**	Twentieth Sunday after Trinity.
29	M	
30	Tu	[Examinations in December.
31	W	Latest date for receiving entries for the ANNUAL UNIVERSITY

Sydney University Calendar.

1906.

NOVEMBER XXX.

1	Th	
2	F	[MATRICULATION Examination on November 13th.
3	S	Last day for receiving applications for the LAW
4	**S**	Twenty-first Sunday after Trinity.
5	M	Senate meets.
6	Tu	
7	W	
8	Th	
9	F	King's Birthday.
10	S	
11	**S**	Twenty-second Sunday after Trinity.
12	M	
13	Tu	SENIOR PUBLIC Examination and MATRICULATION
14	W	[HONOUR and SCHOLARSHIP Examinations begin.
15	Th	[LAW MATRICULATION Examination.
16	F	
17	S	
18	**S**	Twenty-third Sunday after Trinity.
19	M	
20	Tu	
21	W	
22	Th	
23	F	
24	S	
25	**S**	Twenty-fourth Sunday after Trinity.
26	M	
27	Tu	
28	W	
29	Th	
30	F	

Sydney University Calendar.

1906.

DECEMBER XXXI.

1	S	Lectures cease.
2	**S**	First Sunday in Advent.
3	M	Senate meets. ANNUAL Examinations begin.
4	Tu	
5	W	
6	Th	
7	F	
8	S	
9	**S**	Second Sunday in Advent.
10	M	
11	Tu	
12	W	
13	Th	
14	F	
15	S	MICHAELMAS TERM ends.
16	**S**	Third Sunday in Advent.
17	M	
18	Tu	
19	W	
20	Th	
21	F	
22	S	
23	**S**	Fourth Sunday in Advent.
24	M	
25	Tu	Christmas Day.
26	W	
27	Th	
28	F	
29	S	
30	**S**	First Sunday after Christmas.
31	M	

Sydney University Calendar.

1907.

JANUARY XXXI.

1	Tu	Federation of Australia, 1901.
2	W	
3	Th	
4	F	
5	S	
6	**S**	Epiphany.
7	M	
8	Tu	
9	W	
10	Th	
11	F	
12	S	
13	**S**	First Sunday after Epiphany.
14	M	
15	Tu	
16	W	
17	Th	
18	F	
19	S	
20	**S**	Second Sunday after Epiphany.
21	M	
22	Tu	King's Accession, 1901.
23	W	
24	Th	
25	F	
26	S	Foundation of N.S.W., 1788.
27	**S**	Septuagesima Sunday.
28	M	
29	Tu	
30	W	
31	Th	

Sydney University Calendar.

1907.

FEBRUARY XXVIII.

1	F	
2	S	
3	**S**	Sexagesima Sunday.
4	M	Senate meets.
5	Tu	
6	W	
7	Th	
8	F	
9	S	
10	**S**	Quinquagesima Sunday.
11	M	
12	Tu	Last day for receiving entries for the University
13	W	[Examinations in March.
14	Th	
15	F	
16	S	
17	**S**	First Sunday in Lent.
18	M	
19	Tu	
20	W	
21	Th	
22	F	
23	S	
24	**S**	Second Sunday in Lent.
25	M	
26	Tu	Latest date for receiving applications for Post-
27	W	[Graduate Scholarships and also Bursaries.
28	Th	

Sydney University Calendar.

1907.

MARCH XXXI.

1	F	
2	S	
3	**S**	Third Sunday in Lent.
4	M	Senate meets.
5	Tu	
6	W	
7	Th	
8	F	
9	S	
10	**S**	Fourth Sunday in Lent.
11	M	LENT TERM begins. University Examinations begin, viz.,
12	Tu	[MATRICULATION Examination, DEFERRED ANNUAL Examina-
13	W	[tions, ANNUAL LAW Examinations, HONOUR Examinations
14	Th	[in the Faculty of Arts, and DEPARTMENT OF ENGINEERING.
15	F	[P. N. RUSSELL SCHOLARSHIP Examination. Latest date for
16	S	[receiving Competitive Prize Compositions.
17	**S**	Fifth Sunday in Lent.
18	M	Examinations for Higher Degrees begin.
19	Tu	
20	W	
21	Th	
22	F	[LATION Examination on April 1st.
23	S	Latest date for receiving entries for the LAW MATRICU-
24	**S**	Palm Sunday.
25	M	Lectures begin.
26	Tu	
27	W	
28	Th	
29	F	Good Friday.
30	S	
31	**S**	Easter Day.

Sydney University Calendar.

1907.

APRIL XXX.

1	M	Senate meets. LAW MATRICULATION Examination.
2	Tu	
3	W	
4	Th	
5	F	
6	S	
7	**S**	First Sunday after Easter.
8	M	
9	Tu	
10	W	
11	Th	
12	F	
13	S	
14	**S**	Second Sunday after Easter.
15	M	
16	Tu	
17	W	
18	Th	
19	F	
20	S	
21	**S**	Third Sunday after Easter.
22	M	
23	Tu	
24	W	
25	Th	
26	F	
27	S	
28	**S**	Fourth Sunday after Easter.
29	M	[PUBLIC Examinations on June 10th.
30	Tu	Last day for receiving applications for LOCAL JUNIOR

Sydney University Calendar.

1907.

MAY XXXI.

1	W	
2	Th	
3	F	
4	S	
5	**S**	Rogation Sunday.
6	M	Senate meets.
7	Tu	
8	W	
9	Th	Ascension Day.
10	F	
11	S	
12	**S**	Sunday after Ascension Day.
13	M	
14	Tu	
15	W	
16	Th	
17	F	Last day for receiving entries for the JUNIOR PUBLIC
18	S	[Examinations on June 10th.
19	**S**	Whit Sunday.
20	M	
21	Tu	
22	W	
23	Th	
24	F	
25	S	
26	**S**	Trinity Sunday.
27	M	
28	Tu	
29	W	
30	Th	
31	F	

Sydney University Calendar.

1907.

JUNE XXX.

1	S	LENT TERM ends.
2	**S**	First Sunday after Trinity
3	M	Prince of Wales Birthday.
4	Tu	
5	W	
6	Th	
7	F	
8	S	
9	**S**	Second Sunday after Trinity.
10	M	JUNIOR PUBLIC Examinations begin. Senate meets.
11	Tu	
12	W	
13	Th	
14	F	
15	S	Marseilles Orient
16	**S**	Third Sunday after Trinity.
17	M	TRINITY TERM begins. London (O)
18	Tu	
19	W	
20	Th	
21	F	
22	S	
23	**S**	Fourth Sunday after Trinity.
24	M	
25	Tu	
26	W	
27	Th	
28	F	
29	S	
30	**S**	Fifth Sunday after Trinity.

Sydney University Calendar.

1907.

JULY XXXI.

1	M	Senate meets.
2	Tu	Congress of Universities
3	W	
4	Th	
5	F	
6	S	
7	**S**	Sixth Sunday after Trinity.
8	M	
9	Tu	
10	W	
11	Th	
12	F	
13	S	
14	**S**	Seventh Sunday after Trinity.
15	M	
16	Tu	
17	W	
18	Th	
19	F	
20	S	
21	**S**	Eighth Sunday after Trinity.
22	M	
23	Tu	
24	W	
25	Th	
26	F	
27	S	
28	**S**	Ninth Sunday after Trinity.
29	M	
30	Tu	
31	W	Leave London (a)

Sydney University Calendar.

1907.

AUGUST XXXI.

1	Th	
2	F	
3	S	
4	**S**	Tenth Sunday after Trinity.
5	M	Public Holiday.
6	Tu	
7	W	Coronation of King Edward VII., 1902.
8	Th	
9	F	
10	S	
11	**S**	Eleventh Sunday after Trinity.
12	M	Senate meets.
13	Tu	
14	W	
15	Th	
16	F	
17	S	
18	**S**	Twelfth Sunday after Trinity.
19	M	
20	Tu	
21	W	
22	Th	
23	F	
24	S	TRINITY TERM ends.
25	**S**	Thirteenth Sunday after Trinity.
26	M	
27	Tu	
28	W	
29	Th	
30	F	
31	S	

Sydney University Calendar.

1907.

SEPTEMBER XXX.

1	**S**	Fourteenth Sunday after Trinity.
2	M	Senate meets.
3	Tu	
4	W	
5	Th	Sydney (O)
6	F	
7	S	
8	**S**	Fifteenth Sunday after Trinity.
9	M	
10	Tu	
11	W	
12	Th	
13	F	
14	S	
15	**S**	Sixteenth Sunday after Trinity.
16	M	
17	Tu	
18	W	
19	Th	
20	F	
21	S	
22	**S**	Seventeenth Sunday after Trinity.
23	M	
24	Tu	
25	W	
26	Th	[Examinations on November 18th.
27	F	[and MATRICULATION HONOUR and SCHOLARSHIP
28	S	Latest date for receiving applications for Local SENIOR
29	**S**	Eighteenth Sunday after Trinity.
30	M	MICHAELMAS TERM begins.

Sydney University Calendar.

1907.

OCTOBER XXXI.

1	Tu	
2	W	
3	Th	
4	F	
5	S	
6	**S**	Nineteenth Sunday after Trinity.
7	M	Senate meets.
8	Tu	
9	W	
10	Th	
11	F	
12	S	
13	**S**	Twentieth Sunday after Trinity.
14	M	
15	Tu	
16	W	
17	Th	
18	F	
19	S	
20	**S**	Twenty-first Sunday after Trinity.
21	M	
22	Tu	
23	W	
24	Th	[Examinations on November 18th.
25	F	[nation, and MATRICULATION HONOUR and SCHOLARSHIP
26	S	Latest date for receiving entries for the SENIOR PUBLIC Exami-
27	**S**	Twenty-second Sunday after Trinity.
28	M	
29	Tu	
30	W	[Examinations in December.
31	Th	Latest date for receiving entries for the ANNUAL UNIVERSITY

Sydney University Calendar.

1907.

NOVEMBER XXX.

1	F	
2	S	
3	**S**	Twenty-third Sunday after Trinity.
4	M	Senate meets.
5	Tu	
6	W	
7	Th	[MATRICULATION Examination on November 18th.
8	F	Last day for receiving applications for the LAW
9	S	King's Birthday.
10	**S**	Twenty-fourth Sunday after Trinity.
11	M	
12	Tu	
13	W	
14	Th	
15	F	
16	S	
17	**S**	Twenty-fifth Sunday after Trinity.
18	M	SENIOR PUBLIC Examination and MATRICULATION
19	Tu	[HONOUR and SCHOLARSHIP Examinations begin.
20	W	[LAW MATRICULATION Examination.
21	Th	
22	F	
23	S	
24	**S**	Twenty-sixth Sunday after Trinity.
25	M	
26	Tu	
27	W	
28	Th	
29	F	
30	S	

Sydney University Calendar.

1907.

DECEMBER XXXI.

1	**S**	First Sunday in Advent.
2	M	Senate meets.
3	Tu	
4	W	
5	Th	
6	F	
7	S	Lectures cease.
8	**S**	Second Sunday in Advent.
9	M	ANNUAL Examinations begin.
10	Tu	
11	W	
12	Th	
13	F	
14	S	
15	**S**	Third Sunday in Advent.
16	M	
17	Tu	
18	W	
19	Th	
20	F	
21	S	MICHAELMAS TERM ends.
22	**S**	Fourth Sunday in Advent.
23	M	
24	Tu	
25	W	Christmas Day.
26	Th	
27	F	
28	S	
29	**S**	First Sunday after Christmas.
30	M	
31	Tu	

ROYAL CHARTER

OF THE

UNIVERSITY OF SYDNEY.

FEBRUARY 27TH, 1858.

Recites Act of Incorporation.

Victoria, by the Grace of God, of the United Kingdom of Great Britain and Ireland, Queen, Defender of the Faith, to all to whom these presents shall come Greeting: WHEREAS under and by virtue of the provisions of an Act of the Governor and Legislative Council of our Colony of New South Wales, passed in the fourteenth year of our reign, No. 31, intituled "An Act to Incorporate and Endow the University of Sydney," and to which our Royal Assent was granted on the 9th day of December, One Thousand Eight Hundred and Fifty-one, a Senate, consisting of Sixteen Fellows, was incorporated and made a body politic with perpetual succession, under the name of the University of Sydney, with power to grant, after Examination, the several degrees of Bachelor of Arts, Master of Arts, Bachelor of Laws, Doctor of Laws, Bachelor of Medicine, and Doctor of Medicine, and to examine for Medical Degrees in the four Branches of Medicine, Surgery, Midwifery, and Pharmacy. AND whereas our trusty and well-beloved Sir William Thomas Denison, Knight Commander of our most honourable Order of the Bath, Lieutenant-Colonel in the Royal Engineers, our Captain-General and Governor-in-Chief

Petition of Senate.

in and over our said Colony, has transmitted to us the humble Petition of the Senate of the said University of Sydney under their common seal, dated the 9th of February One Thousand Eight Hundred and Fifty-seven, wherein is set forth a statement of the establishment of the said University, the appointment of learned Professors of the Faculty of Arts, and the provisions adopted and to be adopted in respect of the faculties of Laws and Medicine, and the course of Education and discipline for the Scholars, Undergraduates, and Graduates of the said University, and in which it is humbly submitted that the standard of acquirements which must be attained by Graduates in the University of Sydney is not below that prescribed by the most learned Universities of the United Kingdom, and the direction of the studies in the said University has been committed to Professors who have highly distinguished themselves in British Universities, that the rules under which the high standard in the University has been fixed cannot be altered without the approval of our representative in the Colony, and that there is invested in him the power of interference should the rules laid down be unduly relaxed in practice, and that, therefore, the Memorialists confidently hope that the Graduates of the University of Sydney will not be inferior in scholastic requirements to the majority of Graduates of British Universities, and that it is desirable to have the degrees of the University of Sydney generally recognised throughout our dominions; and it is also humbly submitted that although our Royal Assent to the Act of Legislature of New South Wales hereinbefore recited fully satisfies the principle of our law that the power of granting degrees should flow from the Crown, yet that as that assent was conveyed through an Act which has effect only in the territory of New South Wales, the *Memorialists believe that the degrees granted by the said University under the authority of the said Act, are not legally entitled to recognition beyond the limits of New South Wales;* and the Memorialists are in consequence most desirous to obtain a grant from us of Letters Patent requiring all our subjects to recognise the degrees given under the Act of the Local Legislature in the same manner as if the said University of Sydney had been an

Soliciting recognition of Degrees conferred by the University.

University established within the United Kingdom under a Royal Charter or an Imperial enactment; and the Memorialists therefore hereby most humbly pray that we will be pleased to take the premises into our gracious consideration and grant to the University of Sydney Letters Patent effective of the object therein set forth. Now KNOW YE that we, taking the premises into consideration, and deeming it to be the duty of our Royal office, for the advancement of religion and morality and the promotion of useful knowledge, to hold forth to all classes and denominations of our faithful subjects, without any distinction whatsoever, throughout our dominions *encouragement for pursuing a regular and liberal course of education*, and considering that many persons do prosecute and complete their studies in the Colony of New South Wales, on whom it is just to confer such distinctions and rewards as may induce them to persevere in their laudable pursuits; do, by virtue of our Prerogative Royal and our especial Grace and certain knowledge and mere motion, by these presents of us, our heirs and successors, will, grant, and declare that the Degrees of Bachelor of Arts, Master of Arts, Bachelor of Laws, Doctor of Laws, Bachelor of Medicine, and Doctor of Medicine, already granted or conferred or hereafter to be granted or conferred by the Senate of the said University of Sydney shall be recognised as Academic distinctions and rewards of merit, *and be entitled to rank, precedence, and consideration* in our United Kingdom and in our Colonies and possessions throughout the world *as fully as if the said Degree had been granted by any University of our said United Kingdom.* And we further will and ordain that *any variation of the Constitution of the said University* which may at any time or from time to time be made by an Act of the said Governor and Legislature shall not, *so long as the same or a like standard of knowledge is in the opinion of the said Governor preserved as a necessary condition for obtaining the aforesaid degrees therein*, in any manner annul, abrogate, circumscribe, or diminish the privileges conferred on the said University by these our Royal Letters Patent, nor the ranks, rights, privileges, and consideration conferred by such degrees. And, lastly, we do hereby for us, our

Such recognition granted.

heirs, and successors, grant and declare that these our Letters Patent or the enrolment or exemplification thereof shall be in and by all things valid and effectual in law according to the true intent and meaning of the same, and shall be construed and adjudged in the most favourable and beneficial sense to the best advantage of the said University, as well in all our courts as elsewhere, notwithstanding any non-recital, uncertainty, or imperfection in these our Letters Patent. IN WITNESS whereof we have caused these our Letters to be made Patent.

Witness ourself at Westminster, the Twenty-seventh day of February, in the Twenty-first year of our Reign.

By WARRANT under the Queen's sign manual.

C. ROMILLY.

THE UNIVERSITY

AND

UNIVERSITY COLLEGES ACT, 1900.

An Act to consolidate the Acts relating to the University of Sydney and Colleges within the University of Sydney.

[Assented to 22nd September, 1900.]

WHEREAS it is expedient for the better advancement of religion and morality and the promotion of useful knowledge, to hold forth to all classes and denominations of Her Majesty's subjects resident in New South Wales, without any distinction whatsoever, an encouragement for pursuing a regular and liberal course of education; and to ascertain by means of examination the persons who acquire proficiency in literature, science, and art, and to reward them by academical degrees as evidence of their respective attainments and by marks of honour proportioned thereto; and to encourage and assist the establishment of colleges within the University of Sydney, in which colleges systematic religious instruction and domestic supervision, with efficient assistance in preparing for the University lectures and examinations, shall be provided for students of the University: Be it therefore enacted by the Queen's Most Excellent Majesty, by and with the advice and consent of the Legislative Council and Legislative Assembly of New South Wales in Parliament assembled, and by the authority of the same, as follows:—

PART I.

Preliminary.

1. This Act may be cited as the "University and University Colleges Act, 1900," and is divided into Parts and Divisions, as follows:—

PART I.—*Preliminary.*—*ss.* 1-5.

PART II.—*Incorporation and constitution of the University and provisions relating to the Senate.*—*ss.* 6-18.

PART III.—*Examinations and degrees.*—*ss.* 19-23.

PART IV.—*Endowment and finance.*—*ss.* 24-29.

PART V.—*Students, licensed masters, and privileged officers.*—*ss.* 30-32.

PART VI.—*Colleges within the University*—

Division 1.—*Interpretation.*—*s.* 33.

Division 2.—*Endowment and subscribed fund*—

(i.) *Conditions of endowment.*—*ss.* 34, 35.

(ii.) *Endowment for building.*—*s.* 36.

(iii.) *Endowment for principal.*—*ss.* 37-39.

(iv.) *Interest on subscribed fund.*—*s.* 40.

Division 3.—*Government of students.*—*s.* 41.

Repeal Schedule.

2. (1) The Acts mentioned in the Schedule to this Act are, to the extent therein expressed, hereby repealed.

Officers under Acts hereby repealed.

(2) All persons elected or appointed under the Acts hereby repealed, and holding office at the time of the passing of this Act, shall continue in office as if this Act had been in force at the time they were appointed, and they had been appointed hereunder.

Regulations or by-laws under Acts hereby repealed.

(3) All regulations or by-laws made under the authority of any Act hereby repealed, and being in force at the time of the passing of this Act, shall be deemed to have been made under the authority of this Act, and references in such regulations to the provisions of any Act hereby repealed shall be deemed to be references to the corresponding provisions of this Act.

Interpretation.

3. In this Act, unless the context or subject-matter otherwise indicates or requires,—

"Bachelor" means any person upon whom the degree of Bachelor has been conferred by the University.

"Doctor" means any person upon whom the degree of Doctor has been conferred by the University.

"Fellow" means a member of the Senate.

"Master" means any person upon whom the degree of Master has been conferred by the University.

"University" means the University of Sydney.

Act not to interfere with rights of Her Majesty 14 Vic. No. 31, s. 24.

4. Nothing in this Act shall be deemed to affect or interfere with any right, title, or interest of Her Majesty, Her Heirs and Successors, or in any way to limit the Royal Prerogative.

Women to be admitted to University privileges. 47 Vic. No. 17, s. 3.

5. The benefits and advantages of the University, and the provisions of this and any other Act relating thereto, shall be deemed to extend in all respects to women equally with men.

Part II.

Incorporation and constitution of the University and provisions relating to the Senate.

The University of Sydney 14 Vic. No. 31, s. 1.

6. The University of Sydney is the body politic and corporate incorporated by that name under the Act fourteenth Victoria number thirty-one, and shall, by that name, have a perpetual succession and a common seal and power to sue and be sued, and to take, purchase, and hold all real and personal property whatsoever, whether the same is situate in New South Wales or elsewhere, and to grant, demise, alien, or otherwise dispose of the same, and also to do all other matters and things incidental or appertaining to a body politic.

Proviso. *Ibid.* s. 2.

Provided that the University shall not, unless with the approval of the Governor, alienate, mortgage, charge, or demise any of its lands, except by way of lease for any term not exceeding thirty-one years from the making thereof, by which lease there shall be reserved and made payable during the whole of the term the best yearly rent that can reasonably be obtained without any fine or foregift.

University to consist of a Senate. *Ibid.* s. 4. 24 Vic. No. 13, s. 2.

7. The said body politic and corporate shall consist of a Senate which shall be constituted by—

(*a*) sixteen elective fellows, who shall be elected as hereinafter provided, and of whom at least twelve shall be laymen; and

(*b*) not fewer than three nor more than six *ex officio* Fellows, who shall be Professors of the said University in such branches of learning as the Senate shall from time to time by any by-law select.

Elections of Fellows. *Ibid.* s. 4. 44 Vic. No. 22, s. 3.

8. Every vacancy occurring by death, resignation, or otherwise among the elective Fellows shall be filled up as it occurs by the election, at a meeting duly convened for the purpose, of such other fit and proper person as may be elected to fill such vacancy by the majority of the following persons present at such meetings, that is to say,—

(*a*) Fellows;

(*b*) Officials declared by this Act to have the same rights and privileges within the University as Masters and Doctors;

(*c*) Graduates keeping their names in accordance with any by-law in that behalf on the register of the University who have taken within the University the degree of Master or of Doctor;

(*d*) Bachelors and all other persons who obtain any certificate which the Senate by by-law declares to be equivalent to the degree of Bachelor, if such Bachelors or other persons are of three years standing in the University, after obtaining such degree or certificate, and are of the age of twenty-one years.

Vacancies. 24 Vic. No. 13, s. 4.

9. Unless by death or resignation no vacancy among the elective Fellows shall occur for any cause not previously specified in some by-law of the University.

Chancellor. 14 Vic. No. 31, s. 4. 24 Vic. No. 13, s. 5.

10. (1) The Senate shall elect out of their own body, by a majority of votes, a Chancellor of the University, who shall hold office for such period as the Senate shall from time to time appoint.

(2) Whenever a vacancy occurs in the said office by death, resignation, or otherwise, the Senate shall, in like manner, elect out of their own body, a person to fill that office.

Vacancies in office of Chancellor.

11. (1) The Senate shall annually, on a day of which due notice has been given, elect out of their own body a Vice-Chancellor of the University, who shall hold office for one year.

Vice-Chancellor. 14 Vic. No. 31, s. 6. 24 Vic. No. 13, s. 5.

(2) Whenever a vacancy occurs in the said office by death, resignation, or otherwise before the expiration of the year of office, the Senate shall, as soon as conveniently may be, hold a meeting of which due notice has been given, and at such meeting elect out of their own body some other person to be Vice-Chancellor for the remainder of the year.

Vacancies in office of Vice-Chancellor.

(3) Any Vice-Chancellor shall be capable of re-election as often as is deemed meet.

Vice-Chancellor eligible for re-election.

12. (1) At every meeting of the Senate the Chancellor or, in his absence, the Vice-Chancellor shall preside as chairman, but if the Chancellor and Vice-Chancellor are both absent, the Fellows present shall elect a chairman.

Chairman. 14 Vic. No. 31, s. 10. 24 Vic. No. 13, s. 5.

13. (1) All questions which come before the Senate shall be decided at any meeting duly convened, at which a quorum is present, by a majority of the votes of the Fellows present.

Questions how decided 14 Vic. No. 31, s. 9.

(2) The chairman at any such meeting shall have a vote, and in case of an equality of votes a second or casting vote

Chairman.

(3) At any such meeting—

(*a*) five Fellows of whom the Chancellor or Vice-Chancellor shall be one; or

(*b*) in the absence of both the Chancellor and Vice-Chancellor, eight Fellows

shall form a quorum.

Quorum. *Ibid.* 16 Vic. No. 28, s. 1.

14. (1) The Senate shall have full power to appoint and dismiss all professors, tutors, officers, and servants of the University.

Senate may appoint and dismiss officers. 14 Vic. No. 31, s. 8.

(2) The Senate shall have the entire management of and superintendence over the affairs, concerns, and

And to have entire management.

property of the University, and in all cases unprovided for by this Act the Senate may act in such manner as appears to them to be best calculated to promote the purposes of the University.

By-laws. *Ibid.* ss. 8, 15, 21. 44 Vic. No. 22, s. 2.

15. (1) The Senate may make by-laws and regulations relating to—

(*a*) the discipline of the University; and

(*b*) examinations for and the granting of scholarships, exhibitions, degrees, certificates or honours; and

(*c*) the conferring of *ad eundem* degrees;

(*d*) the mode and time of convening meetings of the Senate; and

(*e*) all other matters whatsoever regarding the University;

Provided that no such by-law or regulation shall be repugnant to any existing law or to the general objects and provisions of this Act.

Approval of Governor.

(2) All such by-laws and regulations shall be reduced to writing and submitted for the consideration and approval of the Governor, and when approved shall be countersigned by him, and when so countersigned and sealed with the seal of the University shall be of full force and effect.

To be laid before the Legislative Council and Legislative Assembly.

(3) The Colonial Secretary shall lay every such by-law and regulation before the Legislative Council and Legislative Assembly during the session of Parliament in which it becomes in force or within six weeks after the beginning of the next ensuing session.

Evidence.

(4) Any such by-law or regulation may be proved in any Court by the production of a verified copy under the seal of the University.

University to report their proceedings to the Governor. 14 Vic. No. 31, s. 22.

16. (1) The University shall once at least in every year, and also whenever the pleasure of the Governor may be signified in that behalf, report their proceedings to the Governor.

Copy of report to be laid before Legislative Council or Legislative Assembly.

(2) A copy of such report shall be laid before the Legislative Council and Legislative Assembly within six weeks after it is made if Parliament is then in session, or, if not, then within six weeks after the beginning of the next ensuing session.

17. The Governor of New South Wales shall be the visitor of the University, with authority to do all things that pertain to visitors as often as he deems meet. Visitor. *Ibid.* s. 16.

18. No religious test shall be administered to any person in order to entitle him to be admitted as a student of the University, or to hold any office therein, or to partake of any advantage or privilege thereof. Religious tests. *Ibid.* s. 20.

Provided that this enactment shall not be deemed to prevent the making of regulations for securing the due attendance of the students for divine worship at such church or chapel as their parents or guardians may approve.

PART III.

Examinations and degrees.

19. (1) The Senate may give such instruction as it thinks fit, and may, after examination, confer the several degrees of Bachelor, Master, and Doctor, and such other degrees and such certificates in the nature of degrees as it thinks fit in all branches of knowledge, except theology and divinity. Degrees. 14 Vic. No. 31, s. 13. 47 Vic. No. 17, s. 1.

Provided that no student in the University shall be compelled to attend lectures upon or pass examinations in any of the following subjects, namely:—Ethics, metaphysics, and modern history.

(2) All persons who obtain any certificate or qualification which the Senate by by-law declares to be of equivalent rank to the degree of Bachelor shall have the same rights and privileges within the University as Bachelors. Status of holders of certificates. *Ibid.* s. 2.

20. (1) At the conclusion of every examination of candidates the examiners shall declare the name of every candidate whom they deem entitled to any degree, and also— Examiners to declare results of examinations. 14 Vic. No. 31, s. 14.

(*a*) the departments of knowledge in which his proficiency has been evinced; and

(*b*) his proficiency in relation to that of other candidates.

Certificates.

(2) The Chancellor shall give every such candidate a certificate under the seal of the University and signed by such Chancellor, in which the particulars so declared shall be stated.

Ad eundem degrees. 44 Vic. No. 22, s. 1.

21. (1) When any person has obtained in any University, recognised by the by-laws of the University in force for the time being, any degree corresponding or equivalent to any degree which the Senate is now or may hereafter be empowered to confer after examination, the Senate may confer such latter degree upon such persons without examination.

Rights of holders.

(2) The persons upon whom degrees are conferred, under the provisions of the preceding subsection, shall be entitled to the same rights and privileges as appertain to those who have taken the same degrees in the ordinary course in the University.

Senate may authorise educational establishments to issue certificates. 4 Vic. No. 31, s. 11.

22. (1) The Senate may authorise any college or educational establishment, whether incorporated or not, instituted for the promotion of literature, science, or art, to issue to candidates for the degrees of Bachelor of Arts, Master of Arts, Bachelor of Laws, and Doctor of Laws certificates to the effect that the candidate for any such degree has completed such course of instruction therefor as the Senate by regulation prescribes.

Upon which degrees may be granted.

(2) Any person who presents to the Senate any such certificate may be admitted as a candidate for the degree to which it has reference.

Report on medical establishments by Senate. 14 Vic. No. 31, s. 12.

23. (1) For the purpose of granting the degrees of Bachelor of Medicine and Doctor of Medicine, and for the improvement of medical education in all its branches, as well in medicine as in surgery, midwifery, and pharmacy, the Senate may report to the Governor the medical institutions and schools, whether incorporated or not, in the city of Sydney, from which, either singly or jointly with other medical institutions and schools in New South Wales or in foreign parts, it appears to the Senate fit and expedient to admit candidates for medical degrees.

Candidates from such establishments may be admitted to degrees.

(2) On approval of such report by the Governor, the Senate shall admit as a candidate for the degree of Bachelor of Medicine or Doctor of Medicine any person

who presents to the Senate a certificate from any such institution or school to the effect that such person has completed the course of instruction therefor which the Senate by regulation prescribes.

PART IV.

Endowment and finance.

Permanent endowment. *Ibid.* s. 3.

24. (1) By way of permanent endowment for the University the Governor is hereby empowered by warrant, under his hand, to direct to be issued and paid out of the Consolidated Revenue Fund the sum of five thousand pounds in every year as a fund for building, and for defraying the several stipends appointed to be paid to the several professors or teachers of literature, science, and art, and to such necessary officers and servants as are from time to time appointed by the Senate, and for defraying the expense of such prizes, scholarships, and exhibitions as are awarded for the encouragement of students in the University, and for providing gradually a library for the same, and for discharging all incidental and necessary charges connected with the current expenditure thereof.

Proviso. *Ibid.* s. 11.

Provided that the Senate may apply any portion of the said endowment fund to the establishment and maintenance of a college in connection with and under the provisions of the University.

To be paid in quarterly instalments.

(2) The said sum shall be paid in four equal quarterly instalments, on the first day of January, the first day of April, the first day of July, and the first day of October, in every year.

Fees for degrees. 14 Vic. No. 31, s. 13.

25. The Senate may charge such reasonable fees for the respective degrees conferred as they with the approbation of the Governor direct. Such fees shall be carried to one general fee fund for the payment of the expenses of the University.

Fees to Professors and teachers. *Ibid.* s.

26. The Senate may by any by-laws or regulations provide for payment by the students of the University of reasonable fees to the professors or teachers for

attendance on their lectures. Such professors or teachers may, in addition to their stipends, demand and receive such fees from the students.

Fees for entrance, &c. *Ibid.* s. 17.

27. The Senate may in like manner provide for payment by such students of reasonable fees for entrance, degrees, certificates, and other University charges. The Treasurer of the University shall, on behalf of the University, collect such fees from the students.

Powers of the Senate in respect of Levey's legacy. 17 Vic. No. 18, s. 5.

28. The securities representing the investments of the sum of money bequeathed by the late Solomon Levey, Esquire, to the Sydney College, with the interest thereon, shall be held by the Senate upon trust to continue to hold the same, or to alter them from time to time in favour of other investments at interest upon such security and in such manner in all respects as the Senate in their absolute discretion think fit, and the clear or net interest or income arising therefrom shall be applied in or towards the endowment of a scholarship in the University under such regulations as the Senate, in their absolute and uncontrolled discretion in respect of making and altering the same, deem to be as nearly as circumstances permit in accordance with the intention of the said Solomon Levey in making the aforesaid bequest.

Accounts of annual income and expenditure to be laid before the Legislative Council and Assembly. 14 Vic. No. 31, s. 13.

29. The Senate shall once in every year transmit a full account of the whole income and expenditure of the University to the Colonial Secretary, who shall submit the same to the Legislative Council and Legislative Assembly to be subjected to such examination and audit as such Council and Assembly may direct.

PART V.

Students, licensed masters, and privileged officials.

Residence of students. *Ibid.* s. 18.

30. No student shall be allowed to attend the lectures or classes of the University unless he dwells—

(*a*) with his parents or guardian; or

(*b*) with some relative or friend selected by his parents or guardian and approved by the Chancellor or Vice-Chancellor; or

(*c*) in some collegiate or other educational establishment; or

(*d*) with a tutor or master of a boarding-house licensed by the Chancellor or Vice-Chancellor as hereinafter mentioned.

Licensing persons with whom students may reside. 14 Vic. No. 31, s. 19.

31. (1) Every person desirous of being licensed as a tutor or master of a boarding-house in connection with the University shall apply for his license to the Chancellor or Vice-Chancellor in writing under his hand specifying the house or houses belonging to or occupied by the applicant and intended by him for the reception of students, and the number of students who may be conveniently lodged and boarded therein.

Powers of Chancellor or Vice-Chancellor.

(2) Such Chancellor or Vice-Chancellor may require of any such applicant testimonials of character and fitness for the office, and thereupon may grant or withhold the license for the academical year then current or then next ensuing.

License to be registered.

(3) Every such license shall be registered in the archives of the University and shall lapse at the end of the academical year in which it was registered, but may be renewed by the Chancellor or Vice-Chancellor and re-registered.

Revocation of license.

(4) Every such license shall be revocable at any time, and the Chancellor or Vice-Chancellor may forthwith revoke the same in case of any misbehaviour of such tutor or master of a boarding-house or of the students under his care which, in the opinion of the Chancellor or Vice-Chancellor and a majority of the professors of the University, ought to be punished by immediate revocation of such license.

Members of the University. 24 Vic. No. 13, s. 3.

32. Each and every of the following officials, that is to say—

(*a*) every professor and other public teacher and examiner in the schools of the University; and

(*b*) every principal of any incorporated college within the University; and

(*c*) every superior officer of the University declared to be such by any by-law

shall, during his tenure of office, but no longer, have the same rights and privileges within the University as are enjoyed by Masters and Doctors.

PART VI.

Colleges within the University.

Division 1.—*Interpretation.*

Interpretation. 18 Vic. No. 37, s. 10.

33. In this part of this Act, unless the context or subject-matter otherwise indicates or requires,—

"College" means a college within the University.

"Principal" includes the master, warden, rector, or any other head of a college.

Division 2.—*Endowment and subscribed fund.*

(i) *Conditions of endowment.*

Endowment of Colleges. 18 Vic. No. 37, s. 1.

34. Whenever—

(*a*) any college has been established and incorporated by any Act; and

(*b*) the founders of or subscribers to such college have complied with the conditions mentioned in the next section,

such college shall be entitled to the endowments hereinafter severally mentioned, which said endowments shall be paid by the Treasurer under warrants signed by the Governor.

Conditions of endowment. *Ibid.* s 2

35. No such college although incorporated shall be entitled to such endowments unless and until the sum of ten thousand pounds at the least has been subscribed by its founders, and of that sum not less than four thousand pounds has been paid and invested in such manner as the Governor approves, and the residue has been to his satisfaction secured to be paid within three years next following; nor unless

(*a*) the whole of the said ten thousand pounds is to be devoted exclusively to the erection of college buildings on land granted for tha ipurpose by Her Majesty to the University in trust for such

college, if any is so granted, and if not then upon land otherwise conveyed to and accepted by the University in such trust; and

(*b*) it has been agreed by the founders that the entire amount shall be so expended, if the University so requires, within five years next after the first payment on account of either of such endowments.

(ii) *Endowment for building.*

Endowment for building. *Ibid.* s. 3.

36. There shall be paid out of the Consolidated Revenue, in aid of the building fund of every college so incorporated, a sum or sums not exceeding in the whole twenty thousand pounds, nor more than has been from time to time actually expended by the college out of its subscribed funds for the purpose of building.

(iii) *Endowment for principal.*

Endowment for principal's salary. *Ibid.* s. 4.

37. There shall be paid out of the said Consolidated Revenue annually, to such incorporated college in perpetuity, a sum of five hundred pounds for the use of and as a salary to the principal of such college or in aid of such salary.

Conditions as to such endowment *Ibid.* s. 5.

38. Every such principal shall be entitled to the annual salary hereby provided for on the production of his own certificate at the time of each payment that he has during the period to which it relates performed the duties of his office.

Provided that he shall transmit to the Colonial Secretary once in each year a certificate to the like effect under the hands of such persons as are for that purpose appointed by the constitution or rules of the particular college.

Provision where selected principal is out of New South Wales. 18 Vic. No. 37, s6.

39. Where any person selected to be the principal of any such college is out of New South Wales at the time of his appointment no such certificate shall be required until after he has actually entered on his duties, but he shall be entitled to the salary, and the college to which he has been appointed may receive the same accordingly for his use from the day of his embarkation for New South Wales.

Provided that every principal shall actually enter on his duties within six months after such embarkation unless the Governor, upon being satisfied that unavoidable obstacles have intervened, thinks fit to extend that term to nine months.

(iv) *Interest on subscribed fund.*

Accruing proceeds of subscribed fund until expended in building. *Ibid.* s. 7.

40. Until the subscribed fund is required for the erection of college buildings as aforesaid, the interest or other proceeds accruing from the investment thereof, or of the portion remaining unexpended from time to time, may be applied to the general purposes of the college as the governing body of such college may determine.

Division 3.—*Government of students.*

Students of Colleges to be members of University and attend lectures. *Ibid.* s. 8.

41. All students in any such college shall immediately upon entering therein matriculate in the University, and shall thereafter submit and be subject to the discipline thereof, and shall be required duly and regularly to attend the lectures of the University on those subjects an examination and proficiency in which are required for honours and degrees, with the exception, if thought fit by any such college, of lectures on ethics, metaphysics and modern history.

SCHEDULE.

Reference to Act.	Title or Short Title.	Extent of repeal.
14 Vic. No. 31..	An Act to incorporate and endow the University of Sydney.	The whole.
16 Vic. No. 28..	An Act to amend an Act intituled an Act to incorporate and endow the University of Sydney.	The whole.
17 Vic. No. 18..	An Act to enable the University of Sydney to purchase the Sydney College with the land attached thereto.	The whole.
18 Vic. No. 37..	An Act to provide for the establishment and endowment of colleges within the University of Sydney.	The whole.
22 Vic. No. 8..	An Act to amend an Act intituled an Act to provide for the establishment and endowment of colleges within the University of Sydney.	The whole.
24 Vic. No. 13..	An Act to amend the Sydney University Incorporation Act.	The whole.
44 Vic. No. 22..	"Ad eundem Degrees Act of 1881."	The whole.
47 Vic. No. 17..	"University Extension Act of 1884."	The whole.

THE UNIVERSITY AND UNIVERSITY COLLEGES (AMENDMENT) ACT, 1902.

[Assented to 4th December, 1902.]

An Act to amend the University and University Colleges Act 1902.

BE it enacted by the King's Most Excellent Majesty, by and with the advice and consent of the Legislative Assembly of New South Wales in Parliament assembled, and by the authority of the same, as follows:—

Short title.

1. This Act may be cited as the "University and University Colleges (Amendment) Act, 1902," and shall be construed with the University and University Colleges Act, 1900, hereinafter called the Principal Act.

Increase of endowment from £5000 to £10,000.

2. Subsection one of section twenty-four of the Principal Act is amended by the substitution of the word "ten" in place of the word "five" where it occurs in that subsection.

Students of training schools and others to attend lectures on arts or science free.

3. The Senate shall allow students of training schools established under the Public Instruction Act of 1880 and such other persons training for the position of teacher under the Department of Public Instruction as the Minister may approve to attend, for the purpose of graduating in Arts or Science, the University lectures for the period required for such graduation, without the payment of any fees, provided that such students and other persons shall previously have passed the entrance examination prescribed by the University by-laws.

BY-LAWS OF THE UNIVERSITY.

All By-laws heretofore passed by the Senate and now in force are hereby repealed, and in lieu thereof the following By-laws shall be and are hereby declared to be the By-laws under which the University of Sydney shall henceforth be governed. Provided always, that nothing herein contained shall be deemed to revive any By-law previously repealed, or to prejudice any matter already done or commenced under any By-law hitherto in force.

CHAPTER I.—THE CHANCELLOR AND VICE-CHANCELLOR.

1.—The election to the office of Chancellor shall take place 5-7-87
at a duly convened meeting of the Senate to be held in Lent Term.

2.—The Chancellor shall be elected for a period of three 5-7-87
years (except as hereinafter provided), to be computed from the date of election, but shall be eligible for re-election.

3.—In the event of the office of Chancellor becoming vacant 5-7-87
by death, resignation, or otherwise, before the expiration of the full term of office herein prescribed, the election of a successor shall be proceeded with at the next ensuing regular meeting of the Senate, and the Chancellor so appointed shall hold office unti lthe Lent Term next after the expiration of three years from the date of such election.

4.—The election of Vice-Chancellor shall take place annually 5-7-87
at a duly convened meeting of the Senate, to be held in Lent 64 V.
Term, except as in cases otherwise provided by the Act of s. 11.
Incorporation.

5.—The Chancellor and Vice-Chancellor shall be members 6-5-90
ex-officio of every Faculty, Board, or Committee appointed by any By-law or otherwise by the Senate; and at every meeting of any such Faculty, Board, or Committee, the Chancellor, or in his absence the Vice-Chancellor, or, in the absence of both, the Chairman shall preside, or in his absence a member elected for that sitting. The President at such meetings shall have a vote, and in case of an equality of votes, a second or casting vote.

NOTE.—The dates in the margin are the dates of the approval of the various By-laws by His Excellency the Governor in Council.

CHAPTER II.—SENATE.

MEETINGS AND RULES OF PROCEDURE.

7-11-93 1.—The Senate shall meet on the first Monday in every month, or on the nearest convenient day should such first Monday be a public holiday, and may adjourn from time to time to conclude any unfinished business.

5-7-87 2.—At any time in the interval between such meetings it shall be competent for the Chancellor, or in his absence the Vice-Chancellor, in any case of emergency, to call a special meeting of the Senate, to be held as soon as conveniently may be, for the consideration of any business which he may wish to submit to them.

5-7-87 3.—Upon the written requisition of any three members the Chancellor, or in his absence the Vice-Chancellor, or in the absence of both, the Registrar, shall convene a special meeting of the Senate, to be held as soon as conveniently may be after the expiration of seven days from the receipt of such requisition.

5-7-87 4.—Except in any case of emergency as aforesaid, no motion initiating a subject for discussion shall be made but in pursuance of notice given at the previous meeting, and every such notice shall be entered in a book to be kept by the Registrar for that purpose.

5-7-87 5.—The Registrar shall issue to each member of the Senate a summons with a written specification of the various matters to be considered at the next meeting of the Senate, whether such meeting be an ordinary or special one; and such summons, except in any case of emergency, as aforesaid, shall be issued at least three days previous to such meeting.

5-7-87 6.—In the event of a quorum* of the Senate not being present at any meeting within half an hour after the hour appointed, the members then present may appoint any convenient future day, of which at least three days' notice shall be given by the Registrar in the usual manner.

5-7-87 7.—All the proceedings of the Senate shall be entered in a journal, and at the opening of each meeting the minutes of the preceding meeting shall be read and confirmed, and the signature of the chairman then presiding shall be attached thereto.

18-7-93 8.—If any Fellow shall, without leave from the Senate, be absent from the aforesaid meetings for six consecutive calendar months his fellowship shall, *ipso facto*, become vacant; provided that, in computing the said six consecutive months, the month of January shall not be taken into account.

---

* See University and University Colleges Act, sec. 13, p. 9.

ELECTION TO VACANCIES.

9.—At the first meeting of the Senate after the occurrence of a vacancy among the Fellows, a day shall be fixed for a Convocation for the election of a successor, such day to be within sixty days from the date of such Senate meeting, and to be announced at least thirty days before such Convocation, by notice posted at the University and by advertisement in one or more of the daily newspapers. Due notice shall also be given of the day on which a ballot shall be taken, should such be required. Provided that no Convocation shall be held in the month of January. 5-7-87

10.—No person shall be eligible for election to fill any vacancy among the Fellows unless his candidature shall have been communicated to the Registrar under the hands of two qualified* voters ten clear days at least before the intended Convocation, and seven clear days at least after the fixing of the day for such Convocation; and it shall be the duty of that officer to cause the name of such person and the fact of his candidature to be forthwith advertised in one or more of the daily newspapers published in Sydney, and to be posted in a conspicuous place in the University for eight clear days at least before such Convocation. 5-7-87

11.—The Convocation for the election of a Fellow shall be held in the University,† and shall be presided over in the same manner as if it were a meeting of the Senate. Every candidate submitted for election must be proposed and seconded by legally qualified voters. If one candidate only or one only for each vacancy be so proposed and seconded, then such candidate or candidates shall be declared by the President to be duly elected. But if more candidates are proposed and seconded than there are vacancies in the Senate to be filled at such Convocation, a show of hands shall be taken; and unless a ballot be demanded by at least two members of Convocation then present, the President shall declare the candidate or candidates in whose favour there shall be the greatest show of hands to be duly elected. Should a ballot be demanded it shall be conducted in the following manner:— 5-7-87

(*a*) The voters then present shall choose two or more members of Convocation to act as scrutineers.

* The legally qualified voters are Fellows of the Senate for the time being, Professors, Public Teachers and Examiners in the Schools of the University, Principals of Incorporated Colleges within the University, Superior Officers of the University declared to be such by By-law, Graduates holding the Degree of Master or Doctor, and Graduates of three years' standing, who hold the Degree of Bachelor. University and University Colleges Act, secs. 8 and 32.

† By a resolution of the Senate, of date July 2, 1888, *ballots* for the election of Fellows may be held at the Royal Society's Rooms, or in some other central place within the city of Sydney, to be named by the Senate, or by the Chancellor, or by the Vice-Chancellor in his absence.

(*b*) The ballot shall not be held earlier than one week from the day of nomination at Convocation, and shall be notified by notice posted in the University and by advertisement in one or more of the daily newspapers.

(*c*) The ballot shall commence at 10 a.m., and close at 2 p.m., on the day appointed.

(*d*) At the expiration of the time allotted for the ballot the scrutineers shall proceed to the examination of the voting papers, and shall report the result to the President, who shall then declare the candidate or candidates having the majority of votes to be duly elected to the vacant seat or seats in the Senate.

(*e*) In the event of an equality of votes, the election shall be decided by the casting vote of the President.

5-7-87 12.—Before the time fixed for the Convocation for the election of a Fellow, the Registrar shall prepare for the President's use a complete list of all persons entitled to vote under the provisions of the law, and a copy of such list shall be posted in a conspicuous place in the University for two days at least before the time of Convocation.

5-7-87 13.—None but legally qualified voters shall be allowed to be present during the taking of a ballot.

EX-OFFICIO MEMBERS.

[University and University Colleges Act, 1900, Sec. 7 (*b*)]

1-11-04 14.—The Senate hereby makes and declares the following selections of branches of learning, the Professors in which shall be *ex-officio* members of the Senate—that is to say, Modern Literature, Law, Physiology and Geology and Physical Geography, such selections to take effect from the date of the Governor's assent hereto, and to endure until the thirtieth day of September, one thousand nine hundred and six, unless sooner revoked by the authority of the Senate, and with the approval of the Governor.

CHAPTER III.—MEETINGS OF CONVOCATION OTHER THAN FOR THE ELECTION OF FELLOWS.

25-11-87 1.—The Chancellor, or in his absence, the Vice-Chancellor, shall, in pursuance of a resolution of the Senate, or upon the receipt of a requisition signed by at least twenty members of

Convocation, summon a meeting of Convocation to be holden at such time and place as he shall direct. And such meeting shall be held accordingly within twenty-eight days from the date of the requisition. And notice of such meeting shall be given by public advertisement not less than fourteen days before the day appointed for the meeting. Provided that every such requisition shall specify the subjects which it is proposed to bring before Convocation. And if, in the opinion of the summoning officer, the subjects so specified, or any of them, are such as ought not to be discussed in Convocation, he shall refer the matter to the Senate, which shall decide whether the meeting shall be held or not. Provided that no such meeting shall be held in the month of January.

2.—At all meetings so summoned the Chancellor, or in his absence the Vice-Chancellor, shall preside. In the absence of the Chancellor and Vice-Chancellor, the members of Convocation present shall elect one of their number to be president of that meeting. 25-11-87

3.—The presence at any meeting of twenty-five members of Convocation shall be necessary to form a quorum. And if within half an hour from the time of meeting there shall be no quorum present, the meeting shall lapse. 25-11-87

4.—At all meetings of Convocation the Registrar shall act as Secretary, and keep the minutes of all proceedings. 25-11-87

5.—Every meeting may be adjourned by the President to such day and hour as may be fixed by resolution. 25-11-87

6.—All questions submitted to the Convocation shall be decided by a majority of members present. The President shall have a deliberative as well as a casting vote. 25-11-87

7.—All resolutions of Convocation shall be signed by the President, and shall be laid by the Registrar before the Senate at its next meeting. 25-11-87

8.—All members of Convocation attending any such meeting shall appear in the habit of their Degree. 25-11-87

Chapter IV.—SUPERIOR OFFICERS.

[University and University Colleges Act, 1900. Section 32 (c).]

1.—The Registrar and the Solicitor to the University are hereby declared to be Superior Officers of the University, entitled to the rights and privileges conferred by the "Sydney University Incorporation Act Amendment Act of 1861." 5-7-87

CHAPTER V.—THE REGISTRAR.

5-7-87 1.—The Registrar shall keep all necessary records of the proceedings of the University, conduct all necessary correspondence, and keep such registers and books of account as may be required.

5-7-87 2.—All fees, fines, or other sums received by the Registrar in his capacity as such shall be paid into the Bank of the University, in order that the same may be applied, accounted for, and audited in such manner as the Senate may from time to time appoint.

CHAPTER VI.—THE SEAL OF THE UNIVERSITY.

5-7-87 1.—The Seal of the University shall be placed in the charge of the Chancellor or Vice-Chancellor and Registrar, and shall not be affixed to any document except by order of the Senate.

CHAPTER VII.—THE FACULTIES.

5-7-87 1.—There shall be four Faculties in the University, viz.:—

1. Arts. 2. Law. 3. Medicine. 4. Science.

DEANS OF FACULTIES.

9-2-92 2.—A Dean for each of the Faculties in the University shall be appointed by the Senate from time to time for a term not exceeding two years.

6-9-92 3.—In the event of the office of Dean becoming vacant by death, resignation, or otherwise before the expiration of the full term of office herein prescribed, the appointment of a successor shall be proceeded with at the next ensuing regular meeting of the Senate; and the Dean so appointed shall hold office until the first regular meeting of the Senate in the term next after the expiration of two years from the date of such appointment.

CHAPTER VIII.—LIMITATION OF THE TITLE OF PROFESSOR.

5-7-87 1.—The title of Professor shall be distinctive of those Public Teachers of the University upon whom the Senate shall have conferred that title, and no person in or belonging to the University, or any College within it, shall be recognised as Professor without the express authority of the Senate.

CHAPTER IX.—PROFESSORIAL BOARD.

27-9-92 1.—The Professors in the four Faculties, with the Chancellor and Vice-Chancellor, shall form a Board to be called "The Professorial Board."

2.—Subject to the By-laws of the University, the Professorial Board shall manage and superintend the discipline of all students in the University, and shall have power to determine all matters concerning the studies and examinations which affect the students of more than one Faculty. 27-9-92

3.—For these purposes the Professorial Board shall make such rules as it may think fit, provided that these rules be not repugnant to any existing By-law; and shall have power to impose any penalties, in accordance with Academic usage, on any student for breach of such rule, or misconduct of any kind. All Public Teachers in the University shall be authorised to inflict a fine for breach of discipline, not exceeding two pounds, provided that every Public Teacher who inflicts any such fine shall immediately report the circumstances in writing to the Professorial Board. 10-7-94

4.—Any member of the University affected by any decision of the Board, or any member of the Board, may appeal therefrom to the Senate, and thereupon the Senate may review such decision, and either confirm, vary, or annul the same. 27-9-92

5.—It shall also be the duty of the Professorial Board from time to time to consider the By-laws which deal with the discipline of the University, and the By-laws which deal with the studies of students of more than one Faculty; and when the Board is of opinion that any such By-laws require amendment, it shall send up recommendations to the Senate to that effect. 27-9-92

6.—A *précis* of the proceedings of the Board shall be laid upon the table of the Senate once in each Term, or forthwith in matters of special importance, and the Senate shall have power of its own motion to review any decision of the said Board. 27-9-92

CHAIRMANSHIP OF BOARDS.

7.—The Chairman of the Professorial Board shall be elected by the members present at a duly convened meeting to be held in Michaelmas Term. He shall hold office for a period of three years, and shall enter upon his office on the first day of January next following the date of his election. In the event of the office becoming vacant by death, resignation, or otherwise before the expiration of the full term herein prescribed, the election of a successor shall be proceeded with at the next ensuing meeting of the Board, and the Chairman so elected shall hold office for three years from the first day of January preceding the date of his election. 7-1-02.

CONVENING AND QUORUM OF BOARDS.

18-7-93 8.—Every meeting of any Board or Faculty shall be convened by written notice from the Registrar, by direction of and on a day named by the Chancellor, Vice-Chancellor, or Chairman, and on the requisition of any two members, addressed to the Registrar, a meeting shall be convened in like manner. At any meeting of the Professorial Board five shall form a quorum, and at any other meeting three shall form a quorum, unless otherwise provided. In case of an equality of votes, that of the presiding Chairman included, such Chairman shall have a casting vote.

REGISTRAR TO ATTEND.

5-7-87 9.—It shall be the duty of the Registrar, if required, to attend the meetings of the several Boards and record their proceedings, to collect all fines imposed by the Professorial Board, and generally to assist in carrying out the directions and rules of every Board.

CHAPTER X.—MATRICULATION.

24-1-05 1.—Candidates for any of the Degrees granted by the University shall be required to matriculate before entering upon the prescribed course.

24-1-05 2.—Candidates before being admitted to matriculation shall have passed one of the examinations required by the By-laws for admission to the prescribed courses in the different Faculties, or shall have been admitted *ad eundem statum*.

24-1-05 3.—Undergraduates of other Universities may, at the discretion of the Professorial Board, be admitted *ad eundem statum* in this University without examination. Provided always that they shall give sufficient evidence of their alleged *status* and of good conduct.

24-1-05 4.—Any person desirous of attending University lectures may do so without matriculation upon payment of such fees as the Senate may from time to time direct.

12-6-05 5.—The examination for matriculation shall include the following subjects :—

DIVISION A.

I. English,

II. Latin,

III. Mathematics (Arithmetic, Algebra, Geometry),

IV. Greek or French or German.

at a lower standard. Candidates who have passed the Junior Public Examination, and have satisfied the examiners in these subjects, in accordance with regulations, will be considered to have satisfied the requirements of this division.

DIVISION B.

I. Higher Latin,
II. Higher English,
III. Higher Mathematics (Algebra, Geometry, Trigonometry),
IV. Higher Greek,
V. Higher French,
VI. Higher German,
VII. Mechanics,
VIII. One of the following subjects:—(*a*) Botany, (*b*) Chemistry (Inorganic), (*c*) Geology, (*d*) Physics Part I., (*e*) Physics, Part II. (*f*) Physiology, (*g*), Zoology,
IX. Modern History,

at a higher standard. Candidates who have passed the Senior Public Examination, and have satisfied the examiners in these subjects, will be considered to have satisfied the requirements of this division.

Candidates will be required to pass in the subjects of Division A, and in such subjects of Division B as are prescribed hereunder for admission to the respective Faculties or departments of study.

Candidates may present themselves for the subjects prescribed in divisions A and B of this examination successively or concurrently, but must pass in the total number of subjects required at not more than two examinations, one of which must include all the prescribed subjects at the higher standard, provided that the higher examination in any subject shall be held to include the lower.

6.—In addition to the examination at the lower standard 24-1-05
described in Division A, the requirements in respect of the subjects at the higher standard (Division B) for admission to the various Faculties, shall be as follows:—

* Under the existing regulations, a candidate must have obtained at least second classes in the three languages prescribed, or in the three Mathematical subjects, or not less than second classes in four of the six subjects.

(*a*) For the Faculty of Arts every candidate shall be required to pass in two subjects of Division B, of which one must be Higher Latin.

(*b*) For the Faculty of Law every candidate shall be required to pass in three subjects of Division B, one of which must be Higher Latin.

(*c*) For the Faculty of Medicine every candidate shall be required to pass in three subjects of Division B, one of which must be Higher Latin, Higher Greek, Higher French or Higher German.

(*d*) For the Faculty of Science every candidate shall be required to pass in three subjects of Division B, one of which must be Higher Latin, Higher Greek, Higher French or Higher German.

(*e*) For any of the departments in Engineering candidates shall be required to pass in three subjects of Division B, which must include Higher Mathematics and either Higher Latin, Higher Greek, Higher French or Higher German.

24-1-05 7.—A student who has passed the Matriculation Examination for the Faculty of Arts, has attended the lectures prescribed for students in the First Year of the Faculty of Arts, and has passed the First Year Examination in Arts, shall be qualified for admission to the curriculum in the Faculties of Law, Medicine and Science, and the Department of Engineering without further examination.

24-1-05 8.—The Matriculation Examination shall take place at the commencement of Lent Term, but the examiners in special cases, with the sanction of the Chancellor or Vice-Chancellor, are authorised to hold such examinations at such other times as may be deemed expedient.

24-1-05 9.—The examination shall be conducted by means of written or printed papers, but the examiners shall not be precluded from putting *vivâ voce* questions.

24-1-05 10.—The names of all candidates who have passed the Matriculation Examination shall be arranged and published in such order as the Board of Examiners shall determine.

24-1-05 11.—Any person who shall have passed an examination qualifying for admission to his faculty or department, and shall have paid a fee of two pounds to the Registrar, may be admitted as a matriculated student.

Chapter XI.—TERMS.

1.—The Academic year shall contain three terms, that is to say:— 5-7 87

Lent Term.—Commencing on the tenth Monday in the year and terminating with the Saturday before the twenty-second Monday in the year, with a recess at Easter not exceeding nine days.

Trinity Term.—Commencing on the twenty-fourth Monday in the year and terminating with the Saturday before the thirty-fourth Monday in the year.

Michaelmas Term—Commencing on the thirty-ninth Monday in the year and terminating with the Saturday before the fifty-first Monday in the year.

Chapter XII.—LECTURES.

1.—Lectures shall commence on the first day of Term, except in Lent Term, in which they shall commence on the third Monday of Term. In Michaelmas Term the lectures shall cease on the Saturday before the forty-ninth Monday in the year. 5-7-87

2.—Lectures of an hour each shall be given by the Professors and other teachers at such times and in such order as the Senate may from time to time direct. 5-7-87

3.—Before the admission of a student to any course of lectures he shall pay to the Registrar of the University the fee appointed by the Senate. 5-7-87

4.—Full and complete tables of lectures and subjects of examinations shall be printed annually in the Calendar, and posted at the University from time to time. 5-7-87

5.—Each Professor and Lecturer shall keep a daily record or class roll of the lectures delivered by him, showing the number and names of the students present at each lecture. These class rolls shall be laid on the table at the end of each Term. 18-7-93

6.—Any undergraduate not holding a scholarship in the University, nor being a member of a college established under the provisions of the Act 18 Victoria, No. 37, may be exempted from attendance upon any or all of the prescribed lectures, upon producing evidence which shall satisfy the Faculty to which he belongs that there are sufficient reasons for such exemption. Provided that no such exemption shall be granted for more than one year at any time. 27-9-92 Act 1900 Pt. vi.

27-9-92 7.—No such exemption shall be granted until the Examiners shall have specially certified to the Faculty that the abilities and attainments of the applicant are such as to enable him, in their opinion, to keep up with the usual course of study at the University without attendance upon lectures. Undergraduates admitted *ad eundem statum*, and who are not required to pass the Matriculation Examination, shall nevertheless be required to pass a special examination, to be certified by the Examiners as above, before obtaining exemption from attendance upon lectures.

1-10-88 8.—Notwithstanding the provisions of By-laws 6 and 7, matriculated students, who are students in a Training Institution for teachers organised under the Department of Public Instruction, may be admitted to the First Year Examination in the Faculty of Arts without having attended the University lectures, upon presenting a certificate from the Under Secretary for Public Instruction to the effect that they have attended the course of instruction in such training institution for one year after matriculating. Students of a Training Institution who have passed the First Year Examination may be admitted to the Second Year Examination in the Faculty of Arts without having attended the University lectures of the second year, upon presenting a similar certificate to the effect that they have attended a second course of instruction in such training institution for one year after passing their First Year Examination. All such students having passed the Second Year Examination shall have the status of students commencing the third year in the Faculty of Arts.

Chapter XIII.—YEARLY EXAMINATIONS.

24-1-05 1.—In the Faculties of Arts, Law and Science the yearly B.A. and B.Sc. Examinations shall be held during the last week of Michaelmas Term, with the exception of the Examinations for Honours and Distinctions, which may be held at the beginning of Lent Term.

24-1-05 2.—No undergraduate not exempted under Section 6, Chap. XII., from attendance upon lectures shall be admitted to these examinations who, without sufficient cause, shall have absented himself more than three times during any one term from any prescribed course of lectures. At every yearly examination students must pass the prescribed examinations in the subjects of lectures before they can proceed with their course.

3.—Students who fail to pass, or neglect to attend their annual examinations in any subject or subjects, may be required by their respective Faculties, upon the report of the examiners, to attend again the lectures on such subject or subjects before again presenting themselves for examination. 24-1-05

4.—Every undergraduate exempted from attendance upon lectures under Section 6, Chap. XII., shall, before being admitted to any yearly examination, pay to the Registrar a fee of two pounds. 24-1-05

5.—Undergraduates who have passed the yearly examinations may, at the discretion of the Dean, and upon application, receive certificates to that effect, signed by the Dean of the Faculty in which they are pursuing their studies, and by the Registrar. 24-1-05

6.—Students who show proficiency in the examinations at the termination of individual courses shall be classified as having passed with High Distinction, Distinction, or Credit. The term Honours shall be reserved to indicate special proficiency at graduation, and shall not be used in connection with the examinations at the termination of individual courses. 24-1-05

7.—At each examination additional papers shall be set where necessary for Honours and Distinctions, and a list of the subjects prescribed for Honours and Distinctions shall be published annually in the Calendar. 24-1-05

8.—The names of those candidates who obtain Honours or Distinctions shall be arranged in order of merit. 24-1-05

9.—Examiners shall be appointed from time to time by the Senate to conduct the examinations provided for under these by-laws. 24-1-05

Chapter XIV.—SCHOLARSHIPS.

1.—Scholarships shall be awarded after examination as the Senate may from time to time appoint. 5-7-87

2.—No Scholarship shall be awarded except to such candidates as exhibit a degree of proficiency which shall be satisfactory to the Examiners. Scholars shall be required to proceed with their studies in the respective Faculties in which their Scholarships are awarded. 18-7-93

3.—The examination for Scholarships shall be concurrent with the Matriculation and Yearly Examinations, additional papers and questions being set when required. 5-7-87

30-4-01 4.—No student of the University shall be allowed to hold more than two Scholarships at one time.

Chapter XV.—FACULTY OF ARTS.

24-1-05 1.—The Faculty of Arts shall consist of the Professors of Classics, Mathematics, Modern Literature, History, and Logic and Mental Philosophy, together with the Lecturers in the same subjects.

24-1-05 2.—The Faculty shall meet for the purpose of considering and reporting to the Senate upon such subjects as have relation to the studies, lectures, examinations, and degrees in Arts, and such questions as may be referred to it by the Senate, and shall have the general direction and superintendence over the teaching in Arts, subject to the By-laws, and to such resolutions as the Senate may pass in relation thereto.

24-1-05 3.—The Professors in the Faculty of Arts, together with such other persons as may from time to time be appointed by the Senate, shall form a Board of Examiners for conducting the examinations in the Faculty of Arts; and of this Board the Dean of the Faculty, or in his absence the Professor next in seniority, shall be Chairman.

24-1-05 4.—The Board of Examiners shall from time to time, and in accordance with the provisions of the By-laws for the time being, frame rules and appoint times and places for the several Examinations in the Faculty of Arts.

24-1-05 5.—At the conclusion of each Examination the Board shall transmit to the Senate a report of the result, signed by the Chairman and by at least two other members.

24-1-05 6.—Candidates for the degree of Bachelor of Arts shall be required at the commencement of their course to pass the Matriculation Examination for the Faculty of Arts prescribed in Chapter X., Sections 5 and 6.

24-1-05 7.—Candidates for the degree of Bachelor of Arts shall be required to attend the courses of lectures, covering a period of three years, and to pass the examinations prescribed in the following By-laws, subject to the following conditions:—

(*a*) Every candidate shall be required to attend one full science course with practical work at some time during his curriculum, but the student may take

such course in any of his years, and all other regulations notwithstanding, may, for this purpose, take a First Year course in his third year.

(*b*) Of the ten courses necessary for graduation, at least two continuous courses shall be taken in two subjects, provided that, for the purposes of this By-law, the courses in Law shall be held to be continuous with those in History and Philosophy.

8.—Candidates for the degree of Bachelor of Arts shall, 24-1-05
during their First Year, attend four of the following University courses, provided—(*a*) That two at least be taken from list A; (*b*) that one of them be a Language; and (*c*) that one be Mathematics, unless the student has complied with one of the following conditions, viz.: (i.) Has passed in Higher Mathematics at the Matriculation Examination; (ii.) has gained a first-class in three Higher Language subjects. Students who claim exemption under (ii.) must attend two Language courses, and obtain Distinction in the subjects of these courses at the First Year Examination, otherwise they will be required to take Mathematics I. in their Second Year.

List A.

I. Latin I.
II. Greek I.
III. English I.
IV. French I.
V. German I.
VI. History I.
VII. Philosophy I.

List B.

VIII. Mathematics I.
IX. Chemistry I., including laboratory practice.
X. Physics I., ,, ,,
XI. Geology I., ,, ,,
XII. Biology I., ,, ,,

9. Students of the First Year shall be required to pass an 24-1-05
examination in the subjects in which they have attended lectures under Section 8.

24-1-05 10. Candidates for the degree of Bachelor of Arts shall, during their Second Year, attend three University courses from either of the following lists (A and B), provided—(*a*) That one be a Language; (*b*) that one at least be taken from list A; and (*c*) that any selected from list B have not already been taken.

List A.

I. Latin II.
II. Greek II.
III. Mathematics II.
IV. English II.
V. French II.
VI. German II.
VII. History II.
VIII. Philosophy II.
IX. Chemistry II., including laboratory practice.
X. Physics II., ,, ,,
XI. Geology II., ,, ,,
XII. Biology II., ,, ,,
XIII. Physiology I., ,, ,,
XIV. One of the following—(*a*) Roman Law, (*b*) Constitutional Law, (*c*) Jurisprudence and International Law.

List B.

The courses prescribed in Section 8 for the First Year.

24-1-05 11.—Students of the Second Year shall be required to pass an examination in the subjects of the lectures which they have attended under Section 10.

24-1-05 12.—Candidates for the degree of Bachelor of Arts shall, during their Third Year, attend three University courses from either of the following lists (A and B), provided—(*a*) That one of them be a Language, unless three Language courses have already been taken; (*b*) that one at least be taken from list A; and (*c*) that none of the three have already been taken.

List A.

I. Latin III.
II. Greek III.
III. Mathematics III.

IV. English III.
V. French III.
VI. German III.
VII. History III.
VIII. Philosophy III.
IX. Chemistry III., including laboratory practice.
X. Physics III., ,, ,,
XI. Geology III., ,, ,,
XII. Biology III., A and B, ,, ,,
XIII. Physiology II., ,, ,
XIV. Roman Law.
XV. Constitutional Law.
XVI. Jurisprudence and International Law.
XVII. Introductory Anatomy, Practical Histology, and Biology III, A.

List B.

The Courses in Section 10 prescribed in List A for the Second Year.

13.—Students of the Third Year shall be required to pass an examination in the subjects of the lectures which they have attended under Section 12. 24-1-05

14.—The work of students attending lectures shall be tested by means of written and oral class examinations, class exercises, or essays, and the results of such tests shall be reported to the Senate. 24-1-05

15.—In determining the results of the Annual Examinations, the Examiners shall take into account the results of the tests described in Section 14. 24-1-05

16.—The fee for the degree of Bachelor of Arts shall be three pounds. No candidate shall be admitted to the examination unless he have previously paid this fee to the Registrar. If a candidate fail to pass the examination the fee shall not be returned to him. For any re-examination for the same degree he shall pay a fee of two pounds. 24-1-05

17.—The examination shall be conducted in the first instance by means of printed papers, and at the termination of such examination each candidate shall undergo a *vivâ voce* examination if the Examiners think fit. 24-1-05

24-1-05 18.—The degree of Bachelor of Arts with Honours in any given subject shall be awarded only to candidates who have attended a course of not less than two years' study in that subject, who have obtained Credit or Distinction at the Annual Examinations, and have satisfied the examiners as to their general proficiency.

24-1-05 19.—Students proceeding to the Degree of Bachelor of Arts who have passed the Second Year Examination with Distinction either in Classics (Latin and Greek) or in Mathematics, may elect to attend lectures during their third year in that subject only in which they have so passed; and if they obtain First or Second Class Honours in that subject they shall be held to have passed their Third Year Examination.

24-1-05 20.—The candidate for Honours who shall have most distinguished himself at the B.A. Examination in Classics, Mathematics, or Logic and Mental Philosophy, shall, if he possess sufficient merit, receive a bronze medal.

MASTER OF ARTS.

5-7-87 21.—There shall be a yearly examination for the Degree of M.A. during Lent Term, or at such other times as the Examiners, with the sanction of the Chancellor or Vice-Chancellor, may appoint.

5-7-87 22.—Every candidate for this Degree must have previously obtained the Degree of B.A., and two years must have elapsed since the time of his examination for such Degree. He will also be required to furnish evidence of having completed his twenty-first year.

23.—The fee for the Degree of M.A. shall be five pounds. No candidate shall be admitted to the examination unless he have previously paid this fee to the Registrar. If a candidate fail to pass the examination the fee shall not be returned to him. For any re-examination for the same Degree he shall pay a fee of two pounds.

11-9-93 24.—Candidates for the Degree of M.A. shall elect to be examined in one or more of the following branches of knowledge :—

I. Classical Philology and History.
II. Mathematics and Natural Philosophy.
III. Logic, Moral, Mental and Political Philosophy.
IV. Modern Literature and Language.
V. Modern History.

The candidate most distinguished in each branch at the examination shall, if he possess sufficient merit, receive a bronze medal.

25.—The Senate may, at its discretion, admit to examination for the Degree of Master of Arts any person who shall have obtained at least two years previously the Degree of Bachelor of Arts, or equivalent first Degree in Arts, in any other University approved by the Senate. Every candidate for admission under this By-law must make application in writing to the Registrar and supply satisfactory evidence of his qualification as aforesaid, and that he is a person of good fame and character; and upon the approval of his application shall pay to the Registrar a fee of two pounds for the entry of his name in the University books, in addition to the prescribed fee for his Degree. Every candidate before he is admitted to this Degree shall be required to furnish evidence of having completed his twenty-first year. 5-7-87

CHAPTER XVI.—FACULTY OF LAW.

1.—The Professor or Professors and Lecturers in the subjects of the curriculum in Law, together with such Fellows of the Senate as are members of the Legal Profession, shall constitute the Faculty of Law. 20-1-03

2.—The Faculty shall meet for the purpose of considering and reporting to the Senate upon such subjects as have relation to the studies, lectures, examinations, and degrees in Law, and such questions as may be referred to it by the Senate. 20-1-03

3.—The Dean of the Faculty of Law shall act as Chairman at all meetings of the Faculty, but in his absence the members then present shall elect a Chairman from amongst themselves. The Chairman at such meetings shall have a vote, and in case of an equality of votes, a second or casting vote. 20-1-03

4.—It shall be the duty of the Registrar to summon meetings of the Faculty at such times as may be required by the Dean; provided that upon a written requisition by three members of the Faculty, the Dean, or, in his absence, the Registrar, shall convene a special meeting. No question shall be decided at any meeting of the Faculty unless there be present at least five members. 20-1-03

5.—The Dean of the Faculty of Law shall exercise a general direction and superintendence over the teaching in law, subject to such resolutions in relation thereto as may be passed by the Senate or by the Faculty of Law. 20-1-03

20-1-03 6.—There shall be two degrees granted in the Faculty of Law, viz.:—Bachelor of Laws (LL.B.) and Doctor of Laws (LL.D.)

24-1-05 7.—Candidates for the degree of Bachelor of Laws (LL.B.) shall, before admission to the Law School, produce evidence either, (i.) of having graduated in Arts; or (ii.) of having completed two years in the Faculty of Arts and passed the Second Year Examination in Arts; or (iii.) of having completed the First Year in the Faculty of Arts in accordance with the provisions of Chapter X., Section 7; or (iv.) of having passed the Entrance Examination prescribed in Chapter X., Sections 5 and 6.

20-1-03 8.—Thereafter candidates for the Degree of LL.B. shall attend such courses of instruction as may be prescribed by the Faculty in the following subjects, that is to say:—

I. In the First Year—

Constitutional Law;

Roman Law; and

The Law relating to Contracts (including Mercantile Law), Torts, Crimes and Domestic Relations.†

II. In the Second Year—

Jurisprudence, Legal History and the Elements of Political Science;

International Law (Public and Private);

The Law of Property and the Elements of Conveyancing; and

The Rules of Legal Interpretation.

III. In the Third Year—

Procedure in Civil and Criminal Cases, both before the Supreme Court in its common law jurisdiction, and before courts of inferior jurisdiction; together with the Law of Evidence and Pleading; and

Equity and Company Law; the Law relating to Bankruptcy, Probate and Divorce; together with procedure in those jurisdictions.

Provided that candidates who have already graduated in Arts shall be at liberty to take this course in two years; whilst candidates who have not completed two years in Arts shall be

†In this and all other professional subjects the law referred to is the law in force in New South Wales.

required to extend this course over a period of not less than four years: Provided also that the order in which these courses of instruction are taken, may, in the case of any individual candidate, be varied with the written consent of the Dean of the Faculty.

9.—Candidates for the degree of Bachelor of Laws shall also be required to pass two examinations, which shall be called respectively "the Intermediate LL.B." and "the Final LL.B." Examinations, and which shall be held at the commencement of Lent Term in each year. Candidates who have not acquitted themselves satisfactorily in such class or term examinations, or other exercises (including participation in moots and attendance in court) as may be prescibed by the Faculty, may be refused admission to these examinations. 20-1-03

10.—At the Intermediate LL.B. Examination candidates shall be examined in:—(1) Constitutional Law; (2) Roman Law; (3) Jurisprudence, Legal History, and the Elements of Political Science; and (4) International Law (Public and Private). Provided that candidates shall be at liberty to take this examination in two sections, of which Section I. shall include Constitutional Law and Roman Law; and Section II. Jurisprudence, Legal History, the Elements of Political Science, and International Law (Public and Private). 20-1-03

11.—At the Final LL.B. Examination candidates shall be examined in:—(1) The Law relating to Contracts (including Mercantile Law), Torts, Crimes, and Domestic Relations; (2) the Law of Property, and the Elements of Conveyancing; (3) Procedure in Civil and Criminal Cases, both before the Supreme Court in its common law jurisdiction and before courts of inferior jurisdiction, together with the Law of Evidence and Pleading, and the Rules of Legal Interpretation; and (4) Equity and Company Law, the Law relating to Bankruptcy, Probate and Divorce, together with procedure in those jurisdictions. 20-1-03

12.—The names of candidates who pass the Intermediate LL.B. Examination shall be published in order of merit. The names of the candidates who pass the Final LL.B. Examination shall be published in three groups, comprising respectively (1) those who have obtained First Class Honours; (2) those who have obtained Second Class Honours; and (3) those who have passed. Provided that a candidate who does not pass the Intermediate LL.B. Examination within two years of his commencing his course 20-1-03

in Law shall not be eligible for any Prize or Scholarship awarded for proficiency in that Examination; and provided also that a candidate who does not pass the Final LL.B. Examination within three years of passing the Intermediate LL.B. Examination, shall not be eligible for any Prize or Scholarship awarded for proficiency in the subjects of that Examination.

20-1-03 13.—Candidates shall be exempt from attending lectures and passing examinations in any of the prescribed subjects which may have formed part of their course for the degree of Bachelor of Arts, but from no others.

20-1-03 14.—The degree of LL.D. shall not be conferred until after the expiration of two years from the granting of the degree of LL.B.

20-1-03 15.—Candidates for the degree of Doctor of Laws shall be required to pass one examination, which shall be called "the LL.D. Examination," and which shall be held in Trinity Term in each year.

20-1-03 16.—At the LL.D. Examination candidates shall be examined in (1) Legal History; (2) Roman Law (including a special subject from the Digest to be indicated from time to time); (3) One of the following special subjects:—(*a*) Common Law, including Mercantile Law, Criminal Law, the Law of Evidence, and Procedure; (*b*) Equity and Company Law, the Law relating to Bankruptcy, Probate and Divorce, together with procedure in those jurisdictions; (*c*) the Law of Property, and the Practice of Conveyancing; or (*d*) Constitutional Law; and (4) International Law (Public and Private).

20-1-03 17.—The candidates who distinguish themselves most highly at the Degree Examinations respectively shall, if of sufficient merit, receive a bronze medal.

18.—The fees for the Degrees of Bachelor of Laws and Doctor of Laws shall be ten pounds respectively. These fees shall be paid to the Registrar before the examination, and shall not in any case be returned to the candidate.

19.—Candidates who fail to pass the examination for either degree shall be required, upon presenting themselves for any further examination for the same degree, to pay a fee of five pounds.

20.—Students at Law and Articled Clerks and other persons may be admitted to such lectures and examinations in Law as they may desire, and in the event of their passing in the subjects of any course, they shall be entitled to receive certificates to that effect. 20-1-03

CHAPTER XVII.—FACULTY OF MEDICINE.

1.—The Chancellor and Vice-Chancellor, the Fellows of the Senate who are legally qualified members of the Medical Profession, and the Professors and Lecturers in the subjects of the Medical Curriculum shall constitute the Faculty of Medicine. 20-1-03

2.—The Dean shall exercise a general superintendence over the administrative business connected with the Faculty, and it shall be the duty of the Registrar to summon meetings of the Faculty at such times as may be required by the Dean, provided that upon the written requisition of any three members of the Faculty, the Dean, or in his absence the Registrar, shall convene a special meeting. No question shall be decided at any meeting of the Faculty unless there be present at least five members. In the absence of the Chancellor and Vice-Chancellor the Dean shall act as Chairman at all meetings of the Faculty, but in his absence the members then present shall elect a Chairman from among themselves. The Chairman at any such meeting shall have a vote, and in case of an equality of votes, a second or casting vote. It shall be the duty of the Registrar to attend all meetings and to record the proceedings. 20-1-03

3.—The Faculty shall meet for the purpose of considering and reporting to the Senate upon such subjects as have relation to the studies, lectures, examinations and degrees in Medicine, and such questions as may be referred to it by the Senate. 20-1-03

4.—Class Examinations shall be held during each course of instruction in each term, unless such term immediately precedes the annual examination in the subject of the course. Students shall not absent themselves from these examinations except upon a medical certificate, and at the end of each course a report of the result, signed by the responsible teacher, shall be presented to the Senate by the Dean. The results of these examinations may be taken into account by the examiners at the annual examinations. 20-1-03

5.—There shall be three Degrees granted in the Faculty of Medicine, viz.: Doctor of Medicine (M.D.), Bachelor of Medicine (M.B.), and Master of Surgery (Ch.M.). 20-1-03

24-1-05 6.—Candidates for the degree of Bachelor of Medicine (M.B.) shall, before admission to the Medical School, produce evidence either (i.) of having graduated in Arts or in Science; or (ii.) of having completed the First Year in the Faculty of Arts, in accordance with the provisions of Chapter X., Section 7; or (iii.) of having passed the Matriculation Examination for the Faculty of Medicine prescribed in Chapter X., Sections 5 and 6.

20-1-03 7.—Candidates for the Degrees of Bachelor of Medicine and Master of Surgery shall attend the following courses of instruction:—

I. In the First Year—

Biology and Practical Biology—Lent and Trinity Terms.
Inorganic Chemistry—Lent and Trinity Terms.
Practical Chemistry—Trinity and Michaelmas Terms.
Physics—Trinity and Michaelmas Terms.
Practical Physics—Lent or Michaelmas Term.
Human Anatomy—Michaelmas Term.
Practical Histology—Michaelmas Term.

II. In the Second Year—

Descriptive Anatomy—Lent and Trinity Terms.
Dissections—Lent, Trinity and Michaelmas Terms.
Chemistry, Organic—Lent Term.
Physiological Chemistry—Lent Term.
Experimental Physiology—Trinity Term.
Physiology—Trinity and Michaelmas Terms.
Applied Logic—Lent Term (20 lectures).

III. In the Third Year—

Physiology—Lent Term.
Pharmacology—Trinity Term.
Regional Anatomy—Lent and Trinity Terms.
Dissections—Lent and Trinity Terms.
General Pathology—Michaelmas Term.
Practical Pathology—Michaelmas Term.
Tutorial Surgery—Michaelmas Term.

IV. In the Fourth Year—

Special Pathology—Lent Term.
Surgery—Lent and Trinity Terms.
Clinical Surgery—Lent, Trinity and Michaelmas Terms.

Operative Surgery—Trinity Term.
Medicine—Michaelmas Term.
Tutorial Medicine—Michaelmas Term.
Midwifery—Michaelmas Term.

V. In the Fifth Year—

Medicine—Lent Term.
Tutorial Medicine—Lent Term.
Gynæcology (30 lectures)—Lent Term.
Clinical Medicine—Lent, Trinity and Michaelmas Terms.
Medical Jurisprudence (25 lectures)—Lent and Trinity Terms.
Public Health (25 lectures)—Trinity Term.
Posology and Prescription Writing (10 lectures)—Michaelmas Term.

They shall also be required to attend during the Fifth Year the following courses:—

Diseases of the Mind (15 lectures), including Cliniques.
Diseases of the Eye (15 lectures), including Cliniques.

And two of the following elective courses:—

(*a*) Special Bacteriology (60 hours).
(*b*) Special Therapeutics (15 lectures).
(*c*) Diseases of Children (15 lectures, including Cliniques).
(*d*) Diseases of the Skin (15 lectures, including Cliniques).
(*e*) Diseases of the Ear, Nose and Throat (15 lectures, including Cliniques).

8.—For the Degrees of M.B. and Ch.M. the examinations shall be as follows:—(1) A First Degree Examination at the end of the First Year in Physics, Inorganic Chemistry, Biology and Anatomy; (2) a Term Examination at the beginning of Trinity Term of the Second Year in Organic Chemistry; (3) a Second Degree Examination at the end of Trinity Term of the Third Year in the entire subjects of Anatomy and Physiology. No candidate shall be admitted to this examination unless (*a*) he have previously passed the examination in Organic Chemistry and (*b*) completed the dissection of every part of the body at least once. (4) A Term Examination at the end of Michaelmas Term of the Third Year in General Pathology. (5) A Third or Final Degree Examination at the end of the Fifth Year in Medicine (including Clinical and Tutorial Medicine), Surgery (including Clinical Surgery, Operative Surgery 20-1-03

and Surgical Anatomy, and Tutorial Surgery), Special Pathology, Midwifery, Gynæcology, Public Health and Medical Jurisprudence. No candidate shall be admitted to this examination unless he have previously passed the examination in General Pathology.

20-1-03 9.—Before admission to the Final Examination, candidates shall also be required to present the following certificates at least ten clear days before the date of the examination:—

(i.) Of Hospital Practice during Michaelmas Term of the Third Year, and during the Fourth and Fifth Years, in accordance with an approved hospital time-table.

(ii.) Of having been engaged during at least 15 attendances of two hours each in compounding and dispensing drugs in a Laboratory or Dispensary, or other place for compounding medicines approved by the Faculty of Medicine.

(iii.) Of having acted during not less than nine months as Clinical Clerk in the Medical Wards, not less than six months as Dresser in the Surgical Wards, and not less than three months in each of the following capacities in a recognised hospital, viz., Clinical Clerk and Dresser in the Gynæcological In-patients Department, Student in attendance upon the Surgical Out-patients Department, Student in attendance upon the Medical Out-patients Department, Student in attendance upon the Gynæcological Out-patients Department.

(iv.) Of attendance at Post-mortem Examinations and Demonstrations during at least one term after passing the Second Degree Examination.

(v.) Of attendance on at least 12 cases of childbirth, under such supervision as may be approved by the Faculty of Medicine, after having attended the course of lectures upon Midwifery.

(vi.) Of proficiency in Vaccination, signed by a legally qualified Medical Practitioner.

(vii.) Of proficiency in the Administration of Anæsthetics from a recognised hospital.

(viii.) Of regular attendance and attention signed by the Lecturers in (*a*) Diseases of the Mind, (*b*) Diseases of the Eye, and (*c*) the two Elective Courses chosen by the Student.

10.—No candidate shall be admitted to the Final Examination until he shall have produced evidence of having completed his twenty-first year. Each candidate shall also furnish a certificate of "good fame and character," signed by two competent persons. 20-1-03

11.—At each examination candidates shall be required to give proof of their knowledge by written answers to the questions set, to be followed by a practical or a *vivâ voce* examination in all subjects whatsoever. 20-1-03

12.—Students who fail to pass, or neglect to attend their examinations in any subject or subjects, may be required by the Faculty, on the report of the Examiners, to attend again the Courses of Instruction or Hospital Practice in such subject or subjects before again presenting themselves for examination. 20-1-03

13.—Candidates who have passed all the examinations to the satisfaction of the Examiners shall be recommended to the Senate for admission to the Degree of Bachelor of Medicine, and to the Degree of Master of Surgery if they so elect. 20-1-03

14.—Honours at graduation shall depend upon the proficiency shown in the examinations, in accordance with regulations adopted by the Senate from time to time, and the candidate who shall have been most distinguished shall receive a bronze medal, provided that he shall have obtained First Class Honours. 20-1-03

15.—Accredited certificates of attendance on courses of instruction from other Universities and Schools of Medicine recognised by the University of Sydney may, on the report of the Dean, be accepted by the Senate as proof of the attendance on courses of instruction *pro tanto* required by these By-laws. Provided always that no person shall be recommended to the Senate for admission to the Degrees of Bachelor of Medicine or of Master of Surgery by examination unless he shall present certificates of having attended within the University of Sydney, during each of at least nine Terms, not less than two courses of instruction in subjects included in the Medical Curriculum of the University. In all such cases a Degree in Arts or in Science, or some certificate of general education satisfactory to the Senate, will be 20-1-03

required. Every candidate making application under this By-law must present a certificate of good fame and character, signed by two competent persons.

20-1-03 16.—Bachelors of Medicine and Masters of Surgery of this University shall not possess any right to assume the title of Doctor of Medicine.

20-1-03 17.—The Degree of Doctor of Medicine shall not be conferred until after the expiration of two Academic years from the granting of the Degree of Bachelor of Medicine.

20-1-03 18.—Candidates for the Degree of Doctor of Medicine must produce evidence that, after having obtained the Degree of Bachelor of Medicine, they have spent at least two years in Medical or Surgical practice, or that they have been engaged in a manner approved by the Faculty for a like period in the study of any subject or subjects included in the Medical Curriculum of the University of Sydney.

20-1-03 19.—Candidates for the Degree of Doctor of Medicine shall be required to pass an examination conducted by means of set papers and by *vivâ voce* interrogations in any one of the following departments of Medical Science and Practice, viz., (i.) Medicine, (ii.) Medical Jurisprudence and Public Health, (iii.) Surgery, (iv.) Midwifery and Gynæcology; or in any one of the scientific subjects included in the Medical Curriculum. They shall further be required to present, and if called upon to defend, to the satisfaction of the Examiners, a previously unpublished thesis on some subject included in the Medical Curriculum of the University. Three printed or type written copies of the thesis on paper eight inches wide and ten inches deep must be transmitted to the Registrar at least two months before the date fixed for the examination.

20-1-03 20.—Bronze medals may be awarded for special excellence or originality of the theses presented.

20-1-03 21.—The Degree of Master of Surgery shall not be conferred on any person who has not already been admitted a Bachelor of Medicine.

20-1-03 22.—The fees for the Degrees of Doctor of Medicine, Bachelor of Medicine, and Master of Surgery shall be ten pounds respectively. The fees shall be paid to the Registrar before the examination, and shall not in any case be returned to the candidate.

23.—Candidates who fail to pass the examination for any Degree shall be required upon presenting themselves for any further examination for the same Degree to pay a fee of five pounds. 3-11-03

24.—Undergraduates in Medicine who have passed the First and Second Degree Examinations in Medicine, and the Term Examination in Organic Chemistry, and have, in addition, attended an advanced course of and passed an advanced examination in accordance with the requirements of the Faculty of Science in one of the following divisions, viz.—(*a*) Chemistry, (*b*) Physics, (*c*) Biology, (*d*) Geology—may, on the report of the Dean of the Faculty of Science, be admitted by the Senate to the Degree of Bachelor of Science. 20-1-03

CHAPTER XVIII.—FACULTY OF SCIENCE.

1.—The Faculty of Science shall consist of the Professors of Biology, Chemistry, Engineering, Geology, Mathematics, Physics and Physiology, and other Professors and independent Lecturers in the subjects required for the Degrees in Science. 24-1-05

2.—The Dean shall exercise a general superintendence over the administrative business connected with the Faculty, and it shall be the duty of the Registrar to summon meetings of the Faculty at such times as may be required by the Dean, provided that upon the written requisition of any three members of the Faculty, the Dean, or in his absence the Registrar, shall convene a special meeting. No question shall be decided at any meeting of the Faculty unless there be present at least five members. The Dean shall act as Chairman at all meetings of the Faculty, but in his absence the members then present shall elect a Chairman from amongst themselves. The Chairman at any such meeting shall have a vote, and in case of an equality of votes, a second or casting vote. It shall be the duty of the Registrar to attend all meetings and record the proceedings. 24-1-05

3.—The Faculty shall meet for the purpose of considering and reporting to the Senate upon such subjects as have relation to the studies, lectures, examinations and degrees in Science, and such questions as may be referred to it by the Senate. 24-1-05

4.—There shall be four degrees in Science, viz.: Bachelor of Science (B.Sc.), Doctor of Science (D.Sc.), Bachelor of Engineering (B.E.), and Master of Engineering (M.E.). 24-1-05

24-1-05 5.—Candidates for the degree of Bachelor of Science (B.Sc.) shall, before admission to the curriculum in Science, produce evidence either (i.) of having graduated in Arts; or (ii.) of having completed the First Year in the Faculty of Arts in accordance with the provisions of Chapter X., Section 7; or (iii.) of having passed the Matriculation Examination for the Faculty of Science, prescribed in Chapter X., Sections 5 and 6.

24-1-05 6.—Candidates for the degree of Bachelor of Science shall, during the First Year, attend the courses of instruction upon and pass the examinations in the following subjects:—

I. Chemistry I., including laboratory practice.
II. Physics I., including laboratory practice.
III. and IV. Two of the following:—
Biology I., including laboratory practice.
Geology I., ,, ,, ,,
Mathematics I.

24-1-05 7.—Candidates for the degree of Bachelor of Science shall, during the Second Year, attend the courses of instruction upon and pass the examinations in three of the following subjects:—

I. Biology II., including laboratory practice.
II. Chemistry II., ,, ,, ,,
III. Geology II., ,, ,, ,,
V. Mathematics II.
IV. Physics II., including laboratory practice.
VI. Physiology I., ,, ,, ,,

24-1-05 8. Candidates for the degree of Bachelor of Science shall, during the Third Year, attend the courses of instruction upon, and pass the examinations in two of the following subjects:—

I. Biology III., includiug laboratory practice.
II. Chemistry III., ,, ,, ,,
III. Geology III., ,, ,, ,,
IV. Mathematics III.
V. Physics III., including laboratory practice.
VI. Physiology II., ,, ,, ,,

9. Honours at graduation in any subject of the Science, 24-1-05 curriculum shall be awarded only to such students as have passed through courses I., II., and III. of such subject.

10.—The candidate for Honours who shall have most distinguished himself at the Bachelor of Science examination shall, if he possess sufficient merit, receive a bronze medal. 24-1-05

11.—The examination for the degree of Bachelor of Science shall take place once a year. 24-1-05

12.—No candidate shall be admitted to this examination unless he produce a certificate from the Dean of the Faculty of Science that he is of nine Terms' standing, and that he has passed all the examinations required since his admission to the University. 24-1-05

13.—The fee for the degree of Bachelor of Science shall be three pounds. No candidate shall be admitted to the examination unless he have previously paid this fee to the Registrar. If a candidate fail to pass the examination the fee shall not be returned to him. For any re-examination for the same degree he shall pay a fee of two pounds. 24-1-05

14.—The Annual Examinations shall be conducted in the first instance by means of printed papers, practical exercises, and reference to specimens when necessary; and at the termination of such examinations each candidate shall undergo a *vivâ voce* examination if the Examiners think fit. At least one written Class Examination shall be held during each Term of the first two years except in the mathematical subjects. Students shall not absent themselves from these examinations except upon a medical certificate. Students who fail to pass the Class Examinations may, at the discretion of the Board of Examiners, be refused admission to the Annual Examinations. 24-1-05

15.—The Examination for the degree of Doctor of Science (D.Sc.) shall take place once a year. 24-1-05

16.—Every candidate for the degree of Doctor of Science must have held the degree of Bachelor of Science for at least two years. He shall be required to pass an examination in one of the following branches of Science:—Botany, Chemistry, Geology, Mathematics, Palæontology, Physics, Physiology, Zoology. He shall also be required to present, and if called upon, to defend, a thesis not previously published, embodying the results of an original investigation in the branch of science selected. Five printed or type-written copies of this thesis must be in the hands of the Registrar at least two months before the date fixed for the examination. The candidate may also present, for the 24-1-05

consideration of the examiners, any original contribution or contributions to the branch of Science selected, which he may desire to submit in support of his candidature.

24-1-05 17.—Any candidate for this degree whose qualifications shall be of sufficient merit shall receive a bronze medal.

24-1-05 18.—The fee for the degree of Doctor of Science shall be ten pounds. No candidate shall be admitted to the examination unless he have previously paid this fee to the Registrar. If a candidate fail to pass the examination the fee shall not be returned to him, but he shall be admissible to one further examination for the same degree without the payment of an additional fee. For each subsequent examination that may be required he shall pay the sum of five pounds.

DEPARTMENT OF ENGINEERING.

24-1-05 19. The degree of Bachelor of Engineering shall be given in the three branches of (i.) Civil Engineering, (ii.) Mining and Metallurgy, (iii.) Mechanical and Electrical Engineering.

24-1-05 20.—Candidates for the degree of Bachelor of Engineering shall, before admission to the curriculum in Engineering, produce evidence either (i.) of having graduated in Arts or in Science; or (ii.) of having completed the first year in the Faculty of Arts in accordance with the provisions of Chapter X, Section 7, or (iii.) of having passed the Matriculation Examination for the Department of Engineering prescribed in Chapter X, Sections 5 and 6.

24-1-05 21.—Candidates for the degree of Bachelor of Engineering in any branch shall, during the First Year, attend the courses of instruction upon, and pass the examinations in, the following subjects:—

I. Chemistry I., including laboratory practice.
II. Descriptive Geometry.
III. Mathematics.
IV. Applied Mechanics, including laboratory practice.
V. Physics I., including laboratory practice.
VI. Engineering Drawing.

CIVIL ENGINEERING.

22.—Candidates for the degree of Bachelor of Engineering in Civil Engineering shall, during the Second Year, attend the courses of instruction upon, and pass the examinations in, the following subjects :— 24-1-05

I. Mathematics.
II. Mechanical Engineering I., including laboratory practice.
III. Civil Engineering I.
IV. Physics II., including laboratory practice.
V. Surveying I., including field work.
VI. Engineering Drawing and Design.

23.—Candidates for the degree of Bachelor of Engineering in Civil Engineering shall, during the Third Year, attend the courses of instruction upon, and pass the examinations in, the following subjects :— 24-1-05

I. Civil Engineering II., including laboratory practice.
II. Civil Engineering III., including laboratory practice.
III. Surveying II., including field work.
IV. Architecture and Building Construction.
V. Geology I., including laboratory practice.
VI. Engineering Drawing and Design.

Every candidate is required to prepare and submit to the Board of Examiners an original thesis or set of working drawings and pecifications for machinery or works.

MINING AND METALLURGY.

24.—Candidates for the degree of Bachelor of Engineering in Mining and Metallurgy shall, during the Second Year, attend the courses of instruction upon, and pass the examinations in, the following subjects :— 21-1-05

I. Mechanical Engineering I., A, including laboratory practice.
II. Physics II., including laboratory practice.
III. Geology I., including laboratory practice.
IV. Civil Engineering I.
V. Chemistry.
VI. Engineering Drawing and Design.

24-1-05 25.—Candidates for the degree of Bachelor of Engineering in Mining and Metallurgy shall, during the Third Year, attend the courses of instruction upon, and pass the examinations in, the following subjects :—

I. Geology II., including laboratory practice.
II. Mineralogy, including laboratory practice.
III. Civil Engineering III., A, including laboratory practice.
IV. Surveying I. and III., including field work.
V. Building Construction.
VI. Mechanical Engineering II., A, including laboratory practice.
VII. Electrical Engineering I., A, including laboratory practice.
VIII. Practical Metallurgy and Assaying I.
IX. Engineering Drawing and Design.

24-1-05 26.—Candidates for the degree of Bachelor of Engineering in Mining and Metallurgy shall, during the Fourth Year, attend the courses of instruction upon, and pass the examinations in, the following subjects :—

I. Mining.
II. Metallurgy.
III. Practical Metallurgy and Assaying II.
IV. Mining and Metallurgical Design.

Every candidate is required to prepare and submit to the Board of Examiners an original thesis or set of working drawings and specifications for machinery or works.

MECHANICAL AND ELECTRICAL ENGINEERING.

24-1-05 27.—Candidates for the degree of Bachelor of Engineering in Mechanical and Electrical Engineering shall, during the Second Year, attend the courses of instruction upon, and pass the examinations in, the following subjects :—

I. Mechanical Engineering I., including laboratory practice.
II. Mathematics.
III. Physics II., including laboratory practice.
IV. Surveying I., including field work.

V. Civil Engineering I.
VI. Engineering Drawing and Design.
VII. Mechanical Workshop Practice.

28.—Candidates for the degree of Bachelor of Engineering in Mechanical and Electrical Engineering shall, during the Third Year, attend the courses of instruction upon, and pass the examinations in, the following subjects:— 24-1-05

I. Mathematics.
II. Mechanical Engineering II., including laboratory practice.
III. Electrical Engineering I., including laboratory practice.
IV. Civil Engineering II., A and III., A, including laboratory practice.
V. Practical Chemistry.
VI. Engineering Drawing and Design.

The annual examination of Third Year Students shall be held at the end of Trinity Term. Before entering upon his Fourth Year each student shall be required to present a certificate showing that he has had six months' practical workshop experience in some approved engineering works.

29.—Candidates for the degree of Bachelor of Engineering in Mechanical and Electrical Engineering shall, during the Fourth Year, attend the courses of instruction upon, and pass the examinations in, the following subjects:— 24-1-05

I. Electrical Engineering II., including laboratory practice.
II. Mechanical Engineering III., including laboratory practice.
III. Mechanical and Electrical Design.

Every candidate is required to prepare and submit to the Board of Examiners an original thesis or set of working drawings and specifications for machinery or works.

30.—A candidate shall not be admitted to the Degree of Bachelor of Engineering unless he shall produce a certificate from the Dean of the Faculty of Science that he is of nine Terms' standing, that he has passed all the examinations, and has satisfactorily complied with all the other conditions required of him since his admission to the University. 8-10-89

11-9-93 31.—The candidate who shall most distinguish himself in the Honour Division of the Third Annual Examination shall, if of sufficient merit, receive a bronze medal.

8-10-89 32.—The examination for the Degree of Master of Engineering shall take place once a year. This degree shall not be conferred until after the expiration of three Academic years from the granting of the B.E. Degree.

9-2-92 33.—Every candidate shall be required to produce to the Board of Examiners satisfactory certificates or other evidence of having been engaged during three years in the practice of one of the four branches of Engineering specified in By-law 31, one year at least of which must have been spent in acquiring a practical knowledge of the branch or branches selected, under the direction of an Engineer or Architect practising the branch or branches in which he wishes to be examined.

13-12-92 34.—Candidates for the Degree of Master of Engineering shall have taken Honours in the Professional subjects of the examination for the Degree of B.E.; or must attain the standard for Honours at some subsequent B.E. Examination, and shall be required to pass examinations in one of the following divisions or branches:—

I. Engineering Construction in Iron, Steel, Timber, Masonry and Concrete.
II. Hydraulic and Sanitary Engineering.
III. Railway Engineering, including railway location, Permanent Way, Locomotives and Rolling Stock, and Railway Appliances.
IV. Architecture, Building Construction and Sanitation.
V. Mechanical Engineering and Machine Construction.
VI. Mining and Metallurgy.
VII. Electrical Engineering.

Candidates must give at least twelve months' notice of their intention to proceed to the Master's Degree.

Candidates shall be required to prepare a complete set of working drawings and specifications of such works or machinery as the Examiners may require in the particular division or branch of Engineering selected.

8-10-89 35.—The diplomas for the Degrees of Bachelor and Master of Engineering shall specify the branch or branches of Engineering for which they are granted.

36.—The fees for the degrees of Bachelor and Master of Engineering shall be ten pounds respectively. These fees shall be paid to the Registrar before the examination, and shall not in any case be returned to the candidate. Candidates who fail to pass the examination for either degree shall be required, upon presenting themselves for any further examination for the same degree, to pay a fee of five pounds.

37.—Graduates in Engineering in any branch may, upon 8-10-89
passing the Degree Examination in any other branch or branches, and producing satisfactory evidence of practical work therein, receive a certificate for such additional branch or branches.

38.—The fee for such additional examination for the Degrees 8-10-89
of Bachelor and of Master of Engineering shall be ten pounds.

39.—The candidate who shall most distinguish himself in 11-9-93
the examination for the Degree of Master of Engineering shall, if of sufficient merit, receive a bronze medal.

40.—Notwithstanding the provisions of sections 6, 7 and 8 of this chapter,—

1. Undergraduates who have completed two years of the course prescribed for students in the Department of Civil Engineering, and have passed the second year examination, may proceed to the degree of Bachelor of Science by attending the third year courses of instruction in Mathematics and Physics and passing the examinations in those subjects.
2. Undergraduates who have completed three years of the course prescribed for students in the Department of Mining and Metallurgy, and have passed the third year examination, may proceed to the degree of Bachelor of Science by attending the third year courses of instruction in Chemistry and Geology and passing the examinations in those subjects.
3. Undergraduates who have completed two years of the course prescribed for students in Mechanical and Electrical Engineering, and have passed the second year examination, may proceed to the degree of Bachelor of Science by attending the third year courses of instruction in Mathematics and Physics and passing the examinations in those subjects.

Provided that no student who takes advantage of this section shall be at liberty during the period towhich this section applies to take up any course except those prescribed by this section.

5-7-87 CHAPTER XIX.—ADMISSION *AD EUNDEM GRADUM.*

1.—Admission *ad eundem gradum* in the University may, at the discretion of the Senate, be granted without examination to Graduates of the following approved Universities—that is to say, the Universities of Oxford, Cambridge, London and Durham, the Victoria University, the University of St. Andrew's, Edinburgh, Glasgow, Aberdeen and Dublin, the Queen's University of Ireland, and the Royal University of Ireland, lately established in its place; and the Universities of Melbourne, New Zealand and Adelaide; and may also be granted to Graduates of such other Universities as the Senate may from time to time determine; provided always that they shall give to the Registrar, to be submitted to the Senate, sufficient evidence of their alleged Degrees respectively, and of their good fame and character. Upon the approval of his application each candidate shall pay to the Registrar a fee of two pounds for the entry of his name on the University books, in addition to the prescribed fee for his Degree.

CHAPTER XX.—REGISTER OF GRADUATES.

5-7-87 1.—A Register of Graduates of the University shall be kept by the Registrar in such manner as the Senate shall from time to time direct.

5-7-87 2.—A Register of the Members of Convocation shall be kept by the Registrar in such manner as the Senate shall from time to time direct, and such Register shall be conclusive evidence that any person whose name shall appear thereon at the time of his claiming a vote at a Convocation is so entitled to vote.

CHAPTER XXI.—SUBSTITUTES FOR OFFICERS.

5-7-87 1.—Any act required by the By-laws to be performed by any officer of the University may, during the absence or other incapacity of such officer, unless otherwise provided, be performed by a person appointed by the Senate to act in his place.

CHAPTER XXII.—ACADEMIC COSTUME.

12-9-92 1.—The Academic Costume shall be for—

The Chancellor and Vice-Chancellor—a robe and cap similar to those worn by the Chancellor of the University of Oxford. In undress, the silk gown worn by other members of the Senate, black velvet cap and gold tassel.

A Member of the Senate—the habit of his Degree, or a black silk gown of the description worn by Graduates holding the Degree of Doctor, with tippet of scarlet cloth, edged with white fur, and lined with blue silk, black velvet trencher cap.

Doctor of Laws, Medicine or Science—the gown worn by Graduates holding the Degree of Doctor in the Universities of Oxford or Cambridge, black cloth trencher cap.

Doctor of Laws—hood of scarlet cloth, lined with blue silk.

Doctor of Medicine—hood of scarlet cloth, lined with purple silk.

Doctor of Science—hood of scarlet cloth, lined with amber-coloured satin.

Master of Arts—the ordinary Master's gown of Oxford or Cambridge, of silk or bombazine with black silk hood lined with blue silk, black cloth trencher cap.

Master of Surgery—the ordinary Master's gown of Oxford or Cambridge, of silk or bombazine, with hood of scarlet cloth lined with French grey, black cloth trencher cap.

Master of Engineering—a Master of Arts gown, with black silk hood, lined with light maroon-coloured silk, black cloth trencher cap.

Bachelor of Laws or Medicine—the black gown worn by civilians in Oxford or Cambridge holding Degrees, black cloth trencher cap.

Bachelor of Laws—hood of black silk, edged with blue silk.

Bachelor of Medicine—hood of black silk, edged with purple silk.

Bachelor of Arts, Science or Engineering—a plain black stuff gown, black cloth trencher cap.

Bachelor of Arts—hood similar to that worn by the B.A. at Cambridge.

Bachelor of Science—hood of black stuff, edged with amber-coloured silk.

Bachelor of Engineering—hood of black stuff, edged with light maroon-coloured silk.

Bachelor of Dental Surgery—hood of black stuff, edged with purple and cream-coloured silk.

Licentiate in Dental Surgery—a gown similar to that worn by Bachelors of Arts, Science and Engineering, black cloth trencher cap, hood of black stuff, edged with cream-coloured silk.

An Officer not being a Graduate—a black silk gown of the description worn by civilians not holding Degrees, black cloth trencher cap.

Undergraduate—a plain black stuff gown, black cloth trencher cap.

Scholar—plain black stuff gown, with a velvet bar and shoulder strap, black cloth trencher cap.

5-7-87 2.—Members of the University shall on all public occasions, when convened for Academic purposes, appear in their Academic costume.

3.—The Undergraduates shall appear in Academic costume when attending lectures, and on all public occasions in the University; and, whenever they meet the Fellows, Professors, or other Superior Officers of the University, shall respectfully salute them. Provided that students in any Faculty shall be permitted, if deemed expedient by the Faculty, to dispense with Academic dress at such courses of instruction as the Faculty may determine.

CHAPTER XXIII.—PUBLIC EXAMINATIONS.

5-7-87 1.—Two public examinations shall be held every year, the one to be called the Junior Public Examination and the other to be called the Senior Public Examination, and shall be open to all candidates, male or female, who may present themselves.

5-7-87 2.—The Public Examinations shall be held at such times and at such places as the Senate may from time to time appoint.

5-7-87 3.—The subjects of the Junior Public Examination shall be the English Language and Literature, History, Geography, the Latin, Greek, French and German Languages, Arithmetic, Algebra, Geometry, Natural Science, and such other branches of learning as the Senate may from time to time determine.

5-7-87 4.—The subjects of the Senior Public Examination shall be those mentioned in the foregoing section, together with higher Mathematics, Drawing, Music, Natural Philosophy, and such other branches of learning as the Senate may from time to time determine.

5.—Every candidate who shall pass either of these examinations, or such portions of either of them as may be required by the Rules or Orders of the Senate in force for the time being, shall receive a certificate to that effect, specifying the subjects in which he shall have passed, signed by the Dean of the Faculty of Arts and by the Registrar. 5-7-87

6.—No person shall be admitted to either of the Public Examinations until he shall have paid such fees as may be required by the Rules or Orders of the Senate in force for the time being. 5-7-87

7.—The Professors and Assistant Professors not engaged in tuition except publicly within the University, together with such other persons as the Senate may from time to time appoint, shall form a Board for conducting the Public Examinations; and of this Board the Chairman shall be elected at its first meeting in the year. 18-7-93

8.—At the conclusion of each examination the Board shall publish the result and transmit to the Senate a copy of it, signed by the Chairman and at least one other member. 27-9-92

9.—Subject to these By-laws, the Public Examinations shall be conducted according to such Rules or Orders as the Senate may from time to time establish. 5-7-87

CHAPTER XXIV.—EVENING LECTURES.

1.—Courses of Evening Lectures, embracing all the subjects necessary for the Degree of Bachelor of Arts, shall be given at such times and in such order as the Senate may from time to time direct. 30-7-94

2.—Any person desirous of attending a course of Evening Lectures may be allowed to do so upon payment of such fees as the Senate may from time to time direct. 30-7-94

3.—Students who desire to qualify themselves for graduation by attendance upon Evening Lectures shall be required to attend the courses of instruction and pass the examinations prescribed in Chapter XV. for candidates for the degree of Bachelor of Arts, subject to the following provisons. 24-1-05

(*a*) Evening students shall be allowed to distribute the lectures and examinations prescribed for First and Second Year Students over a longer period, taking

the individual courses of instruction and corresponding examinations in any order they please. Provided that course I.[c] in any subject must be taken before course II., except with the permission of the Professor of such subject.

(*b*) The examinations in the whole of the subjects prescribed for students of the Third Year must be taken concurrently.

(*c*) Students must have completed the examinations prescribed for First and Second Year Students one Academic year before attending the Third Year Examination.

(*d*) An evening student may attend the courses prescribed for First Year Students with a view to graduation before he has completely passed the prescribed Matriculation Examination, but the attendance of such unmatriculated student on the courses in Latin, French or Mathematics shall not be allowed to count towards graduation unless he has previously passed the appropriate part of the matriculation or some equivalent examination.

(*e*) No evening student shall be admitted to the courses prescribed for Second Year Students until he has matriculated, nor to the degree of Bachelor of Arts until he is a matriculated student of nine terms standing.

30-7-94 4.—In all cases not provided for in the preceding By-laws of this Chapter, Evening Students shall be subject to the same By-laws, Rules and Regulations as other students.

Chapter XXV.—University Extension.

12-6-05 1.—There shall be a Board, consisting of not more than eighteen members, of whom four at least shall be members of the Senate, and four at least shall be members of the Teaching Staff, and not less than two shall be persons not being members of the Senate or of the Teaching Staff. The Board shall be appointed annually by the Senate, at its monthly meeting in November, and shall be held to be duly constituted upon the appointment of twelve persons to be members thereof, and the Senate may fill vacancies and appoint additional members from time to time if it shall think fit during the year, but so that the

total number of members of the Board shall not exceed eighteen at any time. Membership of the Board shall continue from the time of appointment until the next annual appointment of the Board, when all memberships shall lapse, but all retiring members shall be eligible for re-election.

2.—The Board shall at its first meeting after its appointment in each year elect a Chairman for the year, and may recommend to the Senate the appointment of a Secretary, the tenure of whose office and the amount of whose salary (if any) shall be determined by the Senate. The Chairman shall convene meetings of the Board, and three members shall form a quorum. 12-9-92

3.—All action taken by the Board shall be subject to the By-laws, and to any directions which may be given by the Senate. 12-9-92

4.—The Board shall from time to time recommend to the Senate the names of certain persons to be authorised for employment as University Extension Lecturers, and the Senate shall at its discretion authorise the employment of such persons to deliver lectures under the direction of the Board. 12-9-92

5.—The Board may appoint any person whose employment as Lecturers has been authorised by the Senate to deliver such courses of lectures, and to hold such classes and examinations on such subjects, and at such times and places as the Board may see fit. 12-9-92

6.—The Board shall determine the tenure of office of the Lecturers, the duties to be peformed by them, the fees and charges to be paid for the lectures, classes and examinations, and the mode and time of payment of the fees and charges. 12-9-92

7.—The payments to be made to the Lecturers shall be determined by the Board in accordance with regulations as to the rate of payment to be laid down by the Senate. 12-9-92

8.—The Board shall make all other arrangements requisite for the delivery of lectures and the holding of classes and examinations, and may award such certificates as it shall think fit. 12-9-92

9.—The fees received, together with any Government grant, donations, and such sums as may from time to time be assigned for the purpose by the Senate, shall be the fund for the payment of lecturers and other expenses.

10.—The Board shall, in the month of November in each year, lay before the Senate a report of its proceedings for that year.

CHAPTER XXVI.—TENURE OF OFFICE OF LECTURERS.

29-6-91 1.—All appointments of Public Teachers in the schools of the University, other than Professors, shall be terminable by a notice of not less than six calendar months, which may be given by the Senate at any time, but which, if given by the Teacher, must expire on the 31st December. This By-law shall not apply to any case in which the Senate shall direct that the appointment shall be for a limited period.

7-1-02 2.—All independent Lecturers or Public Teachers other than Professors and Assistant Lecturers and Demonstrators shall, unless specifically appointed for a shorter term, hold office for a period not exceeding seven years, which shall terminate on December 31st next preceding the expiration of seven years from the date of appointment. During such period the appointment shall be terminable at six months' notice, as provided in Section 1 of this chapter, and at the expiration of such period the appointment shall terminate; but the holder shall be eligible for re-appointment.

CHAPTER XXVII.—FINANCE.

11-9-93 1.—The general supervision of the financial affairs of the University shall, subject to the direction and control of the Senate, be entrusted to a Finance Committee, consisting of the Chancellor, the Vice-Chancellor, and four elected Fellows of the Senate, of which number three shall constitute a quorum.

7-6-92 2.—The elected members of the Committee shall be chosen annually by the Senate, and shall remain in office until their successors shall have been appointed. All casual vacancies shall be notified by the Registrar at the next meeting of the Senate, and shall be filled by the Senate as soon thereafter as conveniently may be.

7-6-92 3.—The Finance Committee shall meet once a month, and at such other times as the Senate shall have directed, or when it shall be summoned by the Registrar under the direction of the Chancellor or Vice-Chancellor.

7-6-92 4.—The Registrar shall attend all meetings of the Committee, and shall keep due records and minutes of their proceedings, and shall act generally as executive officer of the Committee. And the University Solicitor may be required by the Committee to attend any of its meetings with reference to the investments or other matters requiring legal advice or assistance.

5.—It shall be the duty of the Finance Committee to submit to the Senate, towards the end of each Academic year, an estimate of the expected revenue for the next ensuing year, together with a statement of the proposed expenditure as already authorised by the Senate or apprehended to be necessary, such estimates and expenditure to be arranged under as many heads as shall be convenient. And the Senate shall, as soon after as may be, consider such estimates and pass votes for expenditure during such coming year, which votes shall not be exceeded unless upon special grounds and on the report of the Finance Committee that sufficient funds are available for the expenditure. 7-6-92

6.—The Finance Committee shall, as soon as practicable after the close of each Academic year, submit to the Senate a report and a duly audited statement of the accounts and transactions during the past year. 7-6-92

7.—The Registrar and Accountant shall present to the Finance Committee in each month a statement showing, with such details and particulars as the Committee shall have required, the full state and condition of the University's financial affairs at that time, and the Registrar shall then inform the Committee of all financial matters proper to be considered at that meeting, and shall produce the Bank Pass Books of the University made up the preceding day. 7-6-92

8.—The Finance Committee shall once in each month present a report setting forth a pay sheet for the disbursements required for that or the next month, as occasion may arise, in accordance with the general estimates and votes for expenditure for the current year, or with any specific order previously made by the Senate, and also setting forth any other demands which the Committee shall, after enquiry and examination, see reason to submit for allowance and payment in that month. 7-6-92

9.—The Finance Committee shall also in each month present to the Senate a report showing the general state and condition of the University's financial affairs, and setting forth all receipts and disbursements since the last preceding report of like character, and shall therein distinguish all loans and repayment of loans from other disbursements and receipts, and the Committee shall, at such meeting and other meetings, promptly report any default in the payment of interest on any investment or in the payment of any principal money which may be due to the University. 7-6-92

7-6-92 10.—No expenditure of funds of the University, otherwise than by way of investment on loan upon the authority of the Finance Committee, with the approval of the Chancellor or Vice-Chancellor, shall be made unless the same shall have been authorised by the Senate.

7-6-92 11.—All moneys received on behalf of the University shall be forthwith paid by the Registrar to the credit of the University at its Bank of deposit, on General or Special Account, as the case may require.

20-9-98 12.—All disbursements of money belonging to the University, whether the same shall be by way of payment or of investment, shall be by cheque on the University Bank, signed by two members of the Senate and countersigned by the Registrar.

20-9-98 13.—The investment of moneys shall be confined within the following classes of securities :—

(*a*) Deposit with the Government of the State at interest, if allowed by the Government for the time being.

(*b*) Purchase of Debentures or Inscribed Stock, or Treasury Bills, or other form of security issued by the Government of any of the Australian States.

(*c*) Debentures or other Loan issues of Municipal or other public bodies within this State, having statutory powers to borrow moneys within limits then open, or of any incorporated body or society having such authority and within such limits.

(*d*) Mortgages of Land and Premises held in fee simple to the extent of two-thirds the estimated value, with sufficient insurance on destructible improvements or articles included in such estimates.

(*e*) Mortgages of Leasehold Lands and Premises held under leases which will not have less than thirty years to run at the date of expiration of such mortgages, to an extent not exceeding three-fifths of like approved estimates, and with like insurance on destructible improvements or articles.

(*f*) Deposits at interest in any Bank of the State.

(*g*) Purchase of Freehold or Leasehold Lands, with or without improvements, provided that no investment under this sub-section shall be made without the special authority after special notice of a meeting of the Senate.

CHAPTER XXVIII.—DEPARTMENT OF DENTAL STUDIES.

1.—The Chancellor and Vice-Chancellor, the Dean of the Faculty of Medicine, the Medical Members of the Senate, the Professors and Lecturers in the subjects of the Dental Curriculum, and a representative elected from among themselves by the Honorary Dental Officers of the Dental Hospital of Sydney shall constitute the Board of Dental Studies. 12-6-05

2.—The Dean of the Faculty of Medicine shall exercise a general superintendence over the administrative business connected with the Board, and it shall be the duty of the Registrar to summon meetings of the Board at such times as may be required by the Dean, provided that upon the written requisition of any three Members of the Board the Dean, or in his absence, the Registrar, shall convene a special meeting. No question shall be decided at any meeting of the Board unless there shall be present at least five members. In the absence of the Chancellor and Vice-Chancellor, the Dean of the Faculty shall preside at meetings of the Board, but in his absence the members then present shall elect a Chairman from amongst themselves. The Chairman at any such meeting shall have a vote, and in case of an equality of votes, a second or casting vote. It shall be the duty of the Registrar to attend all meetings of the Board and to record its proceedings. 12-6-05

3.—The Board shall meet for the purpose of considering and reporting to the Senate upon such subjects as have relation to the Studies, Lectures and Examinations in Dentistry, and upon such questions as may be referred to it by the Senate. 12-6-05

4.—The Degree of Bachelor in Dental Surgery shall be granted after examination in the subjects of the Curriculum in Dentistry. 12-6-05

5.—Candidates for the Degree of Bachelor in Dental Surgery, before commencing their studies, shall pass the Matriculation Examination for the Faculty of Medicine, or shall produce satisfactory evidence of having passed an equivalent examination elsewhere. 12-6-05

6.—Candidates for the Degree of Bachelor in Dental Surgery shall, during the First Year, attend the following courses of instruction:— 12-6-05

1. Physics and Practical Physics.
2. Chemistry, Introductory and Metals.

3. Practical Chemistry, and Metallurgy as applied to Dentistry.
4. Descriptive Anatomy, including Special Anatomy of the Teeth.
5. Dissection (two terms).
6. Practical Histology (Michaelmas).
7. Mechanical Dentistry.

12-6-05 7.—Candidates for the Degree of Bachelor in Dental Surgery shall, during the Second Year, attend the following courses of instruction :—

1. Physiology (Trinity and Michaelmas, two terms).
2. Physiology, Practical (Lent and Trinity, two terms).
3. Surgical Dentistry.
4. Mechanical Dentistry.
5. Dissections (equivalent to two terms).
6. Practice in Surgical and Mechanical Dentistry at the Dental Hospital.
7. Regional Anatomy.

12-6-05 8.—Candidates for the Degree of Bachelor in Dental Surgery shall, during the Third Year, attend the following courses of instruction :—

1. Physiology (one term, Lent).
2. Surgical Dentistry.
3. Mechanical Dentistry.
4. Materia Medica and Therapeutics.
5. Pathology and Bacteriology.
6. Practical Pathology and Bacteriology.
7. Practice in Surgical and Mechanical Dentistry at the Dental Hospital.

12-6-05 9.—Candidates for the Degree of Bachelor in Dental Surgery shall, during the Fourth Year, attend the following courses of instruction :—

1. Surgery and Special Dental Surgery.
2. Anæsthetics.
3. Practice in Surgical and Mechanical Dentistry at the Dental Hospital.

4. Special Clinical Courses.
   (*a*) Medicine.
   (*b*) Surgery.

10.—Candidates for the Degree of Bachelor in Dentistry shall be required to pass the following examinations :— 12-6-05.

At the end of the First Year, an examination in *Physics* and *Chemistry*.

At the end of Trinity Term of the Second Year, an examination in *Anatomy*.

At the end of Trinity Term of the Third Year, an examination in *Physiology*.

At the end of the Third Year, an examination in *Surgical Dentistry*, *Mechanical Dentistry*, *Materia Medica and Therapeutics*, *Pathology and Bacteriology*.

At the end of the Fourth Year, an examination in *Surgical Dentistry*, *Mechanical Dentistry*, *Surgery*.

11.—The fee for the Degree of Bachelor in Dental Surgery shall be ten pounds. This fee shall be paid to the Registrar before the final examination, and shall not, in any case, be returned to the Candidate. A Candidate who fails to pass the examination may be allowed to present himself for a further examination upon payment of the sum of five pounds. 12-6-05.

12.—At each Degree Examination the Candidates shall be required to give proof of their knowledge by written answers to the questions set, and also by a practical or *vivâ voce* examination in all the subjects. 12-6-05.

13.—Before admission to the final Degree Examination, each Candidate shall furnish evidence of having completed his twenty-first year, and also a certificate of good fame and character, to the satisfaction of the Senate. 12-6-05.

14.—Candidates who have passed all the examinations to the satisfaction of the Board may be recommended to the Senate for the Degree of Bachelor in Dental Surgery. 12-6-05.

15.—Accredited certificates of attendance on courses of instruction from other Universities or Schools of Medicine or of Dentistry may, on the report of the Dean, be accepted *pro tanto* by the Senate as proof of the attendance on courses of instruction required by these By-laws. Provided always that no person shall be recommended to the Senate for the Degree in Dental 12-6-05.

Surgery unless he shall have attended, within the University of Sydney, during each of at least six terms, not less than two courses of instruction in subjects included in the Dental Curriculum of the University. In all such cases some certificate of general education satisfactory to the Senate will be required. Any Student who has served or is serving an apprenticeship in Mechanical Dentistry with a registered dentist may, on the report of the Board of Dental Studies, be exempted from the whole or a part of the prescribed workshop practice in that subject.

12-6-05 16.—A Graduate in Medicine of the University may be admitted to examination for the Degree in Dental Surgery on presenting satisfactory evidence that after graduation in Medicine he has devoted at least four terms to the study of Dentistry, and that he has attended the following courses of instruction prescribed for Students in Dentistry, viz.:—1. The Special Course of Lectures on the Anatomy of the Teeth. 2. Practical Metallurgy. 3. The Lectures in Surgical and Mechanical Dentistry. 4. Attendance during one year at a Dental Hospital, with Practical Instruction in Surgical and in Mechanical Dentistry. The examination in such cases shall be confined to the Anatomy of the Teeth, to Practical Metallurgy, and to Surgical and Mechanical Dentistry.

12-6-05 17.—Any person who has been admitted to the Licence in Dental Surgery of the University of Sydney may proceed to the Degree of Bachelor of Dental Surgery, after attending for one year such special courses and passing such examinations as may be prescribed by the Senate.

REGULATIONS.

DISCIPLINE.

REGULATIONS PASSED BY THE PROFESSORIAL BOARD.

It shall be the duty of the Chairman of the Professorial Board to exercise a general supervision over the discipline of the University.

Every fine shall be paid to the Registrar within forty-eight hours from the time of its imposition. If not so paid, the fine shall be doubled; and if the double fine be not paid within one week from the time when the original fine was imposed, the Registrar shall report the fact to the Professorial Board, in order that suitable means may be taken against the offender for his contumacy.

The Dean of each Faculty shall call upon every student in his Faculty who shall have absented himself from more than ten per cent. of any prescribed course of lectures in any one term to show sufficient cause for such absence. The Dean shall at his discretion either decide that the cause shown is sufficient, or submit the matter to the Professorial Board for decision. Such students as fail to show sufficient cause for such absence are, under Section 2 of Chapter XIII. of the By-laws, excluded from admission to the Yearly Examinations.

No excuse for absence from lectures shall be received from any undergraduate unless tendered in writing to the Registrar within one week after he resumes attendance. Every written excuse for absence from lectures in any Faculty shall be submitted to the Dean of that Faculty, who may at once decide that such excuse shall be accepted, or in cases of doubt, may call a meeting of the Professorial Board to adjudicate thereon.

Matriculated students who have lost their places in their own proper year, either by non-attendance at the prescribed course of lectures or by failing to pass the required examinations, are not allowed to compete for honours, scholarships, or prizes at subsequent Yearly, Professional, or Degree Examinations unless by express permission of the Professorial Board.

No student in the Faculty of Medicine who has not been specially exempted shall receive a certificate of attendance upon any course of instruction who shall not have been present at sixty per cent. at least of the meetings of the course.

THE UNIVERSITY LIBRARY.

For books allowed to be taken out of the Library.

1.—No person shall be allowed to take books out of the Library but Fellows of the Senate, Professors and other Public Teachers in the University, Officers of the University or other persons who shall have obtained this privilege under a special resolution of the Senate, and graduates having their names on the books of the University, and being resident in Sydney or its suburbs.

2.—No books shall be taken out of the Library except with the sanction of the Librarian, who shall enter in the book kept for the purpose the name of the borrower, the title of the book borrowed, and the date of the loan, and this entry shall be signed at the time by the borrower.

3.—No person shall be allowed to have in his possession at one time more than ten volumes belonging to the Library, but the Library Committee may dispense with this order in any particular case if they shall be of opinion that sufficient reasons have been assigned for such dispensation; such dispensation, however, shall continue in force no longer than to the end of the current quarter, but upon fresh application may be renewed by the same authority.

4.—Every one who shall borrow or take any book out of the Library shall return it thither again on demand of the Librarian at any time after the expiration of seven days, and without such demand on or before the next of the four following Quarter Days, viz.:—March 31st, June 30th, September 30th, December 31st, under penalty of two shillings for every folio or quarto, and one shilling for every book of less size; all penalties to be repeated every fortnight till the book be returned, or others of the same edition and equal value be placed in their room, such fortnight being first reckoned from the day on which the Library is re-opened after the Quarter Day. If any of the

Quarter Days should fall on a Sunday, or on any other day on which the Library is closed by Rule 20, the day appointed for returning the books shall be the following day.

5.—No book shall be taken out of the Library on the days appointed for the return of books.

6.—Every Professor shall have the privilege of obtaining books for each student attending his lectures and being a member of the University. Each order for the volumes so obtained shall bear the titles of the books, and be dated and subscribed as follows:—

For M.N.,
C.D., Professor.

The books so obtained shall not be taken out of the Library till the day after that on which the Library is re-opened for the Quarter, and they shall be returned at any time after the expiration of seven days, if demanded by the Librarian, and, if not so demanded, not later than the day before the next Quarter Day. The Professor shall be responsible for the books so obtained, and for the penalties under Rule 4; and no student shall have in his possession at one time more than five volumes.

7.—A list of the books omitted to be returned at the end of any quarter, together with the names of the borrowers, shall be posted up in some conspicuous place in the Library.

8.—No person from whom any fine is due to the Library shall be allowed to take out books until such fine has been paid.

9.—If any book be injured or defaced by writing while in the possession of any person taking it out of the Library, he shall be required to replace it by another book of the same edition and of equal value. Persons taking books out of the Library are required to report, without delay, to the Librarian any injury which they may observe in them.

For books not to be taken out of the Library without a note countersigned by the Chancellor or Vice-Chancellor.

10.—Certain printed books, of which a list shall be prepared under the authority of the Library Committee, and kept by the Librarian, shall not be taken out except by a note countersigned by the Chancellor or Vice-Chancellor, nor until the day after that on which the note is presented; and no such note shall be given to any undergraduate member of the University, nor shall any

person have more than five volumes of such books out of the Library at one time. A register shall be kept of all such books taken out of the Library, and of the date on which they are returned; and after the books are returned the plates in them shall forthwith be collated, and the collation be registered; and until such collation shall have been made, the books shall not be accessible to persons using the Library, nor shall the counter-signed note be given up to the persons by whom the books are returned, but in lieu of it an acknowledgment signed by the Librarian or his deputy; and the name of the person by whom the acknowledgment is signed shall also be registered.

11.—The penalties for not returning such books at the Quarter Days shall be double of the penalties prescribed in Rule 4.

For MSS. and books not allowed to be taken out of the Library.

12.—The Library Committee may cause MSS., books containing collections of prints or drawings, and other documents and books of a nature or value to render such precaution expedient, to be locked up in cases or compartments by themselves. These shall not be taken out of the Library on any pretence whatever; and access to them shall not be allowed unless the Librarian or someone deputed by him be present. The Librarian himself shall have charge of the keys.

13.—The Library Committee may direct that certain printed books, of which a list shall be kept by the Librarian, shall not be removed from the Library.

14.—Persons desirous of referring to any particular MSS. or scarce printed books shall apply to the Librarian, who, if he see cause, may allow such MSS. or books to be consulted, but not in the compartment in which the MSS. or scarce printed books are kept.

15.—Parts of periodicals, works in progress, pamphlets, &c., until such time as is proper for binding them, shall be kept under such a system of management that they may be produced, if required, after a few minutes' notice, on application being made to the Librarian, by means of an ordinary Library note, so that persons in whose literary researches such works are necessary may consult them in the Library with the consent of the Librarian.

For admission to the Library.

16.—Except on the day when the Library is re-opened for any quarter, those Undergraduates who have obtained a Professor's order for books shall be admitted to the Library for the purpose of selecting their books, or otherwise consulting the Library, during the hour from one to two.

Admission of persons not Members of the University for the purpose of Study and Research.

17.—The Chancellor or Vice-Chancellor may grant an order of admission to the Library for the purpose of study and research to any person who shall produce to him a recommendation from any Fellow of the Senate, or Professor, or any member of the University who shall have been admitted to the Degree of M.A. or any higher Degree, stating "that the person recommended is well known to him," and "that he is a fit and proper person to obtain such order." The name of the member of the Senate or the Professor upon whose recommendation any such order of admission shall be granted shall be placed after the name of the person receiving the permission in a list to be suspended at the entrance of the Library.

18.—Such persons shall be permitted to use the Library whilst open, except on any days on which the Library is first open for the quarter. This admission order shall have effect only until the expiration of the quarter in which it shall have been granted, and it shall not entitle the holder to have access to lock-up cases.

For Opening and Closing the Library.

19.—For the purpose of allowing the Librarian sufficient time to inspect the books, the Library shall be closed for the first fortnight in the month of January, and also for the two days (excepting Sunday) next after each of the other Quarter Days.

20.—The Library shall be closed on Sundays and Public Holidays.

21.—The Library shall be open on Saturdays from ten till one, and other days from ten till three.

FISHER BEQUEST.

In 1885 the sum of £30,000, or thereabouts, was bequeathed to the University by Thomas Fisher, Esq., "to be applied and expended by the Senate for the time being of the University in establishing and maintaining a Library for the use of the University, for which purpose they may erect a building, and may purchase books, and do anything that may be thought desirable for effectuating the purposes aforesaid."

The Government of the State having decided in 1901 to defray the cost of the erection of a new building at the University, to be called the Fisher Library, the principal money of the Fisher Fund is, by direction of the Senate, to be kept as a perpetual endowment fund for keeping up and adding to the Library.

NICHOLSON MUSEUM OF ANTIQUITIES.

Committee of Management—Professor BUTLER, B.A.; Professor WOOD, M.A.; Professor WOODHOUSE, M.A.; JOSIAH MULLENS, Esq.

Honorary Curator—Professor WOODHOUSE, M.A.

REGULATIONS.

1.—The Bedell shall have charge of that portion of the building devoted to the Museum, and during the absence of the Curator shall be responsible for the due care of the collection.

2.—The Museum shall be open for the admission of visitors every Saturday from the 1st May to the 31st October, from two to five p.m.; and from the 1st November to the 30th April, from two to six p.m. Visitors may also be admitted at any other convenient time when accompanied by a Member of the Senate, or by any Professor or Superior Officer of the University, or by the Curator or the Bedell in charge of the Museum.

3.—All visitors to the Museum shall be required to give their names and addresses, which shall be entered in a book to be kept for that purpose.

4.—Children under 15 years of age shall not be admitted unless accompanied by older friends.

MACLEAY MUSEUM.

Committee of Management—The Challis Professor of Biology, the Professor of Geology and Physical Geography.

Curator—G. MASTERS.

In the year 1874 the Hon. Sir W. Macleay, M.L.C., undertook to present to the University of Sydney his collection of Natural History, together with an endowment for the stipend of a Curator, as soon as a suitable building should have been provided for its reception. The conditions attached to this donation were—

1. That the present Curator should be continued in office;
2. That the endowment of £6,000 for the salary of a Curator should be used for this and no other purpose; and
3. That the Museum should be made easily accessible to students of Natural History and members of the Linnean Society of New South Wales.

Under these conditions the Senate gratefully accepted Mr. Macleay's gift; and the Parliament having made liberal provision for the buildings required, the collection is now in the University.

MUSEUM OF NORMAL AND MORBID ANATOMY.

Committee of Management—The Dean of the Faculty of Medicine, The Challis Professor of Anatomy, the Professor of Pathology.

Honorary Curator—Professor D. A. WELSH, M.A., B.Sc., M.D.

REGULATIONS.

1.—The Museum shall be called the Museum of Normal and Morbid Anatomy, and shall be established for the benefit of all the Medical Departments of the University.

2.—The Museum shall be under the control of a Committee of Management, to be appointed by the Senate at its first meeting in Lent Term.

3.—The Committee shall consist of the Dean of the Faculty of Medicine for the time being, together with two members of the Medical Teaching Staff to be chosen by the Senate.

4.—The working Curator shall be under the control of the Committee of Management; and in the second Thursday of each

Term he shall transmit to the Dean, for the Senate, a report, to be written in a separate book kept for that purpose, of all the work he has done since the last report.

5.—Requisitions for the expenditure of money in connection with the Museum shall be submitted by the Committee of Management to the Finance Committee of the Senate for its approval.

UNIVERSITY EXTENSION LECTURES.

SEE ALSO BY-LAWS, CHAP. XXV. (PAGE 62).

UNIVERSITY EXTENSION BOARD, 1906.—Members of the Senate: His Honor Judge Backhouse, M.A.; H. C. L. Anderson, M.A.; the Hon. W. P. Cullen, M.A., LL.D.; R. Teece, F.I.A. Members of the Teaching Staff: Professors M. W. MacCallum, M.A.; T. W. E. David, B.A.; G. Arnold Wood, M.A.; F. Anderson, M.A.; Pitt Cobbett, M.A., D.C.L.; W. J. Woodhouse, M.A. Unofficial Members: E. B. Taylor, Rev. Andrew Harper, M.A., D.D.; Rev. J. Fordyce, M.A., D.D.; John Kent, G. S. Littlejohn, J. M. Taylor, M.A., LL.B.; R. F. Irvine, M.A.; J. P. Cochrane. Hon. Secretary: E. R. Holme, B.A.

REGULATIONS REFERRING TO LECTURE COURSES.

1.—The Board is prepared to receive and consider applications for courses of University Extension Lectures to be delivered in Sydney, or in any suburb of Sydney or country town.

Applications may be made either by a public institution, such as a School of Arts, or by a Home Reading Circle, or by a Committee specially formed for the purpose. They should be addressed to the Secretary of the University Extension Board, the University, Sydney, who will forward a list of available Lecturers and subjects, and give any other information that may be desired. The Board will, as far as possible, consult the wishes of the applicants in the selection of Lecturer and subject, and in fixing the dates of the lectures and the intervals between them. Courses have usually consisted of ten or six lectures, delivered at intervals of a week.

2.—Applicants must undertake to become responsible for the local management and local expenses of the lectures, and for the payment of the charges made by the Board.

The local management undertaken by the applicants will include providing a suitable lecture room, furnished, if possible, with desks or tables for the convenience of students taking notes; advertising the lectures; arranging for the sale of tickets; and providing a room with suitable appliances and supervision for the concluding examination.

The charge payable to the Board has been fixed at £30 for a course of ten lectures, and £18 for a course of six. But if the lectures are delivered in country towns the charge may be reduced to £20 for a course of ten lectures and £12 for a course of six. The arrangements for the sale of tickets for the course (including the fixing of their price) will be left in the hands of the Local Committee, who may use the proceeds to defray the expenses which have been incurred. It is left to the option of the Local Centre to raise the requisite amount by the sale of tickets, by subscription, or by a combination of these methods; but the amount payable, or a satisfactory guarantee for its payment, must be lodged with the Secretary of the Board before the course begins.

3.—Every person who attends the course will be supplied with a syllabus containing an analysis of each lecture and a list of books recommended for study and reference. The Board will issue to Local Secretaries all copies of syllabus. At each lecture the Lecturer will set questions to be answered in writing by the students. These written answers should reach the Lecturer at least a day before the following lecture. Each lecture will be of an hour's length, and will be followed by a conversation class, at which the Lecturer will comment on and return the written answers of students, invite and answer questions, and discuss and explain difficulties.

4.—Immediately after the last lecture of the course, the Lecturer will send to the Secretary of the Board a report of the attendance, together with a record (in the form of numerical marks or otherwise) of the written work of the students, and a list of those students who have regularly attended the lectures and conversation classes, and have satisfied him by their work during the course.

The course will conclude with an examination, to which those only who are included in the Lecturer's list will be admitted. The examination will be conducted, in consultation with the Lecturer, by a Professor or other Examiner appointed by the Board; and certificates will be awarded on the result of the examination.

MATRICULATION EXAMINATION.

MARCH, 1907, AND MARCH, 1908.

BY-LAWS, CHAPTER X., SECTIONS 5 AND 6.

5.—The examination for matriculation shall include the following subjects:—

DIVISION A.

I. English,
II. Latin,
III. Mathematics (Arithmetic, Algebra, Geometry),
IV. Greek or French or German,

at a lower standard. Candidates who have passed the Junior Public Examination, and have satisfied the examiners in these subjects, in accordance with regulations,* will be considered to have satisfied the requirements of this division.

DIVISION B.

I. Higher Latin,
II. Higher English,
III. Higher Mathematics (Algebra, Geometry, Trigonometry),
IV. Higher Greek,
V. Higher French,
VI. Higher German,
VII. Mechanics,
VIII. One of the following subjects:—(*a*) Botany, (*b*) Chemistry (Inorganic), (*c*) Geology, (*d*) Physics, Part I., (*e*) Physics, Part II., (*f*) Physiology, (*g*) Zoology.
IX. Modern History,

at a higher standard. Candidates who have passed the Senior Public Examination, and have satisfied the Examiners in these subjects, will be considered to have satisfied the requirements of this division.

---

* Under the existing regulations, a candidate must have obtained at least second classes in the three languages prescribed, or in the three Mathematical subjects, or not less than second classes in four of the six subjects.

Candidates will be required to pass in the subjects of Division A, and in such subjects of Division B as are prescribed hereunder for admission to the respective Faculties or departments of study.

Candidates may present themselves for the subjects prescribed in Divisions A and B of this examination successively or concurrently, but must pass in the total number of subjects required at not more than two examinations, one of which must include all the prescribed subjects at the higher standard, provided that the higher examination in any subject shall be held to include the lower.

6.—In addition to the examination at the lower standard described in Division A, the requirements in respect of the subjects at the higher standard (Division B) for admission to the various Faculties, shall be as follows:—

(*a*) For the Faculty of Arts every candidate shall be required to pass in two subjects of Division B, of which one must be Higher Latin.

(*b*) For the Faculty of Law every candidate shall be required to pass in three subjects of Division B, one of which must be Higher Latin.

(*c*) For the Faculty of Medicine* every candidate shall be required to pass in three subjects of Division B, one of which must be Higher Latin, Higher Greek, Higher French or Higher German.

(*d*) For the Faculty of Science every candidate shall be required to pass in three subjects of Division B, one of which must be Higher Latin, Higher Greek, Higher French or Higher German.

(*e*) For any of the departments in Engineering candidates shall be required to pass in three subjects of Division B, which must include Higher Mathematics and either Higher Latin, Higher Greek, Higher French or Higher German.

DETAILS OF SUBJECTS.

The details of subjects for March, 1907, and March, 1908, are as follows:—

DIVISION A.

1. English—Questions on the language generally and on the set book.

* This includes the Department of Dentistry.

**Subject for March*, 1907—Scott, Lord of the Isles.

**Subject for March*, 1908—Ballads, Old and New (ed. *Cotterell*, Macmillan); and Coleridge, Ancient Mariner, (Temple Series for Schools, Dent.)

2. Latin—Translated from specified books, with questions on language and subject matter. Easy passages will also be given for translation at sight from Latin into English and from English into Latin.

**Subject for March*, 1907—Cicero, pro Archia (*Nall*, Macmillan); Cicero, pro Lege Manilia (*Wilkins*, Macmillan).

**Subject for March*, 1908—Cæsar, Gallic War, Book VII. *Compton*, Bell and Sons).

3. Mathematics—The examination will consist of two papers comprising questions in Arithmetic, Algebra and Geometry as described below. The examiners may reject a candidate who shows exceptional weakness in any one of the three sections of these papers.

(*a*) Arithmetic.—With respect to the English Tables of Weights and Measures, only those parts which are in general use will be required.

(*b*) Algebra.—Up to quadratic equations with two unknown quantities, ratio, proportion, surds, and simple questions in fractional and negative indices. Questions may be set involving the use of squared paper in simple equations and simple simultaneous equations.

(*c*) Geometry.—Alternative questions will be given in Geometry. For one set the subject of study will be the first three books of Euclid, and easy questions upon their subject matter. Proofs other than Euclid's will be admitted, but no proof of any proposition will be accepted which assumes the proof of anything not contained in preceding propositions in Euclid. In the other set of questions the regulations for the corresponding Geometry paper in the Junior Public Examination will be adhered to.

4. One of the following:—

(*a*) Greek.—An examination similar to that in Latin.

*Candidates may present one of the authors prescribed in Division B instead of this subject.

**Subject for March*, 1907—Lucian, Vera Historia (ed. *Yates*, in Bell's Illustrated Classics).

**Subject for March*, 1908—The Athenians in Sicily. Selections from Thucydides (ed. *W. C. Compton*, Bell and Sons). Prescribed part—Selections from Book V., pp. 1-60.

(*b*) French.—An examination similar to that in Latin.

**Subject for March*, 1907—Jules Verne, Le Tour du Monde (*Siepmann's Series*, Macmillan).

**Subject for March*, 1908—Desnoyers, Les Mésaventures de Jean-Paul Choppart (*Siepmann*, Macmillan).

(*c*) German.—An examination similar to that in Latin.

**Subject for March*, 1907—Goebel, Rübezahl (*Siepmann's Series*, Macmillan).

**Subject for March*, 1908—Goethe, Das Märchen (*Heath*).

DIVISION B.

1. Higher Latin.—Translation from specified books, with questions on language and subject matter. Translation at sight from Latin into English, and from English into Latin.

Subjects for March, 1907—Livy, Book XXI. (*Trayes*, Bell); Horace, Odes, Book III. (*Page*).

Subjects for March, 1908—Cicero pro Milone and pro Archia (*Reid*, Cambridge); Virgil, Æneid, Book VI. (*Sidgwick* or *Page*).

2. Higher English.—Questions on the structure and origin of the language; on the derivation and the meaning of words; on idioms and usages. Composition. Questions on a set subject.

Subjects for March, 1907—Shakespeare, Henry IV., Part I. (ed. *Deighton*, Macmillan); Gray, Poems (ed. *Watson*, Clarendon Press).

Subjects for March, 1908—Shakespeare, Julius Cæsar (Clarendon Press or Warwick); Milton, Lycidas and other poems (ed. *Verity*, Cambridge University Press).

* Candidates may present one of the authors prescribed in division B instead of this subject.

3. Higher Mathematics.—The examination will consist of two papers comprising questions in Algebra, Geometry and Trigonometry as described below. The examiners may reject a candidate who shows exceptional weakness in any one of the three sections of the papers.

(*a*) Algebra, including the three progressions, the binomial theorem for a positive index, and the properties and use of logarithms. Questions on arithmetic will also be included.

(*b*) Geometry, including Mensuration. The regulations for this subject are the same as those for the Geometry Paper in the Senior Public Examination of 1906, omitting Schedules C and D.

(*c*) Plane Trigonometry up to solution of triangles, properties of triangles, De Moivre's Theorem, limits and simple series.

4. Higher Greek.—An examination similar to that in Higher Latin.

Subjects for March, 1907—Homer, Odyssey, Books IX. and X. (ed. *Merry*, Clarendon Press); Plato, Meno (ed. *E. S. Thompson*, Macmillan).

Subjects for March, 1908—Lysias, the following orations:—Defence of Mantitheus; Against Eratosthenes: Reply to "The Overthrow of the Democracy"; About the Sacred Olive Trunk (best edition, Select Orations of Lysias, ed. *J. M. Whiton*, Ginn and Co., restricted to the above orations. Shuckburgh XVI. Orations, Macmillan, does not contain "the Reply"). Euripides, Medea (ed. *Heberden*, Clarendon Press).

5. Higher French.—An examination similar to that in Higher Latin.

Subjects for March, 1907—Dumas, La Tulipe Noire (*Heath*); Molière, Le Bourgeois Gentilhomme (Macmillan)

Subjects for March, 1908—About, Le Roi des Montagnes (*Siepmann*, Macmillan); Delavigne, Les Enfants d'Edouard (Cambridge University Press).

6. Higher German.—An examination similar to that in Higher Latin.

Subjects for March, 1907—Benedix, Doctor Wespe (Cambridge University Press); Uhland, Ballads and Romances (Macmillan).

Subjects for March, 1908—Goethe, Iphigenie auf Tauris (*Siepmann*, Macmillan); Klee, Die Deutschen Heldensagen (*Hagen und Hilde*, *Gudrun*, Cambridge University Press).

7. Mechanics.—The elements of Statics and Dynamics.

8. One of the following Science subjects—

(*a*) Botany.—General Structure and Physiology of Plants. Characteristic features of the following classes—Fungi, Algæ, Musci, Filices, Lycopodiaceæ, Phanerogamia.

Candidates will be expected to show a practical acquaintance with common examples of these classes, and to be able to distinguish members of the following orders of flowering plants—Ranunculaceæ, Cruciferæ, Rutaceæ, Malvaceæ, Leguminosæ, Labiatæ, Eyacrideæ, Casuarineæ, Myrtaceæ, Umbelliferæ, Proteaceæ, Compositæ, Liliaceæ, Orchideæ, Graminaceæ.

Books Recommended.—J. W. Oliver's Elementary Botany (*Blackie and Son*); Dendy and Lucas's Introduction to the Study of Botany (*Melville, Mullen and Slade*).

(*b*) Inorganic Chemistry.—The Non-Metals and their principal inorganic compounds.

Candidates in Chemistry should be taught the subject practically; where it is impossible for each candidate to perform the necessary experiments personally, lessons illustrated by experiments should be given by the teachers.

Book Recommended.—Tilden's Manual of Inorganic Chemistry (*Churchill and Co.*); or Thorpe's Inorganic Chemistry, 2 vols. (*Collins and Co.*).

(*c*) Geology.—Candidates will be expected to show a knowledge of the same divisions of this subject as those required for the Junior Examination, but at a higher standard. Stratigraphy and Palæontology, however, should be studied in greater detail than for the Junior Examination, and knowledge of a few characteristic fossils of the different geological systems will be required. Candidates will be asked to name and classify the specimens placed before them of common rocks, rock-forming minerals and fossils. Candidates should also be taught elementary field mapping.

BOOKS RECOMMENDED.—Elementary Physical Geography, Professor Davis; Geology for Beginners, W. W. Watts (or Students' Elements of Geology, by Lyell, second edition, by Judd, 1896: this is somewhat more comprehensive than Watts); Volcanoes, Professor Judd; Field Geology, Penning, 1894 edition, with omission of pp. 176-200 and 267-291.

(*d*) Physics, Part I.—Properties of Matter, Heat, Sound and Light.

Properties of Matter.—Properties of gases, liquids and solids, molecular phenomena in liquids.

Heat.—Thermometry and expansion, calorimetry, elementary phenomena connected with change of state, conduction, radiation, mechanical theory of heat.

Sound.—Wave motion, production and propagation of sound, pitch, musical scale, reflection, refraction and interference, vibrations of strings, rods, plates and columns of gas, resonance, audition, combination tones, consonance and vocal sounds.

Light.—Rectilinear propagation, reflection, refraction, lenses, photometry, velocity of light, dispersion, interference, emission and absorption of light, colour sensations, polarisation and double refraction.

BOOK RECOMMENDED.—Watson's Text-book of Physics, omitting those sections marked with an asterisk.

(*f*) Physiology.—The Elements of Animal Physiology.

BOOKS RECOMMENDED.—Foster and Shore's Physiology for Beginners (*Macmillan*); and Huxley's Lessons in Elementary Physiology (*Macmillan*).

(*g*) Zoology.—General Structure and Life History of Animals, with Outlines of their Classification.

BOOK RECOMMENDED.—Parker and Haswell's Manual of Zoology.

9. Modern History.—*Subject for March*, 1907, and March, 1908—The History of Europe, including the History of the British Empire, from 1789 to the present time.

For Books Recommended, see Manual of Public Examinations.

HONOURS AT MATRICULATION.

THE Examination for Matriculation Scholarships and Honours, for candidates intending to enter the University in March, takes place in the previous NOVEMBER, concurrently with the Senior Public Examination. All candidates for the Senior Public

Examination may compete for Matriculation Scholarships and Honours upon giving due notice of their desire to do so. Those who wish to compete for Scholarships and Honours in special subjects, without entering for the Senior Public Examination, may do so upon payment of the Matriculation fee of two pounds; and if they have not already passed an examination which qualifies for Matriculation, they may attend the Pass Matriculation Examination in the following March, without paying an additional fee. Candidates who gain Honours in any subject in November are exempt from taking the corresponding pass paper in the following March. Honours are awarded in Latin, Greek, French, German, and Mathematics.

Scholarship for General Proficiency.

The Scholarship for General Proficiency will be awarded to the candidate who shows the greatest proficiency in not more than ten of the following twelve subjects:—(i.) English, (ii.) Latin, (iii.) Greek, (iv.) French, (v.) German, (vi.) Algebra, (vii.) Geometry and Mensuration, (viii.) Trigonometry, (ix.) (*a*) Mechanics or (*b*) Conic Sections, (x.) Ancient History, (xi.) Modern History, (xii.) One Science subject.

CLASSICS.

Latin.—Translation from specified books, with questions on language and subject matter. Translation at sight from Latin into English, and from English into Latin. The Examination will include questions on Roman History; and questions may be asked on any subject included under the study of the Latin language and literature.

The specified books will be the same as those set for Division B of the Matriculation Examination of the following March.

History of Rome, from the Tribunate of Tiberius Gracchus to the Battle of Actium (B.C. 133 to 31).

Greek.—An Examination similar to that in Latin.

The specified books will be the same as those set for Division B of the Matriculation Examination of the following March.

History of Greece, from the Archonship of Solon to the end of the Peloponnesian War (B.C. 510 to 404).

FRENCH AND GERMAN.—Translation from specified books, with questions on language and subject matter. Translation at sight from French and German into English, and from English into French and German. The Examination will include questions on Grammar, Philology, Literature, or other subjects connected with the study of Modern Languages.

The specified books will be the same as those set for Division B of the Matriculation Examination of the following March.

MATHEMATICS.—The Honour papers in Mathematics will be—

(i.) Algebra, including the three progressions, the binomial theorem for a positive index, and the properties and use of logarithms. Questions on Arithmetic will also be included.

(ii.) *Geometry, including Mensuration.

(iii.) Plane Trigonometry up to solution of triangles, properties of triangles, De Moivre's Theorem, limits and simple series.

(iv.) Either (*a*) Mechanics, or (*b*) Geometrical Conics and the Analytical Geometry of the straight line and circle.

Candidates will be provided with Barraclough's Four Figure Trigonometrical Tables (Angus & Robertson, 6d.) for use in the Algebra and Trigonometry papers.

PRELIMINARY EXAMINATION FOR ARTICLED CLERKS.

Preliminary Examinations for Articled Clerks are held at the University in the months of April and November, commencing on the first Monday in April, and the second Monday in November. Fee, £5 10s. 6d., to be paid to the Prothonotary of the Supreme Court.

The subjects of examination are—(1) Latin; (2) Mathematics; (3) Greek or French or German as prescribed in Division A of the Matriculation Examination.

The stated subjects of the Examinations to be held in November, 1906, and April, 1907, will be the same as those prescribed for the Matriculation Examination of March, 1907.

* For the Geometry Paper see the regulations of the Senior Public Examination for 1906.

TIME TABLES OF LECTURES.

FACULTY
TIME TABLE

N.B.—The numbers in the left-hand column

Reference Number.	Subject.	Lent Term. Mon.	Tu.	W.	Th.	Fri.
	FIRST YEAR.					
7	French (A and B)	¶11	11	..	9A	11B
1	Latin (A and B)	9	¶9	9	..	9
4	Greek	..	9	..	9	..
14	Mathematics	10	10	10	10	10
9	German (Junior)	¶3	..	3	11	..
11	English	..	..	11	..	..
24	Chemistry	12	12	..	12	12
20	Physics	..	..	..	..	..
32	Physiography	..	..	..	..	..
31	*Chemistry (Practical) for Honours .	2-5	..	2-5	..	2-5
	SECOND YEAR.					
14	Mathematics	9	9	9	9	9
10	German (Senior)	¶2,3	..	9	11	..
21-23	Physics (with Laboratory Practice)	..	10	..	10	..
12	English	..	10	..	¶9,1	10
18	History	10	..	10	10	..
2	(*b*) Latin	11	¶11	11	..	11
5	Greek	..	11	..	11	..
33	‡Geology	..	11	..	11	..
38-44	Biology (with Laboratory Practice) ..	11	11	11	11	11
26, 31	Chemistry (Metals), with one term Practical	..	..	..	..	..
8	French (Senior)	12	..	12	¶2	12
15	Logic and Mental Philosophy	..	12	..	12	9
51	(*a*) Physiology	12	12	12	12	12
51	,, (Practical)	10–12	10–12	10–12	10–12	10–12
	THIRD YEAR.					
35A & B	‡Geology	..	9	..	9	..
10	German (Senior)	¶2,3	..	9	11	..
13	English	9	9	¶9	..	9
3	§Latin	10	..	10	10	10
6	Greek	..	10	9,12	..	12
16	Logic and Mental Philosophy	..	11	..	9	11
14	Mathematics	11	11	11	11	11
19	History	11	..	11	11	..
38-44	Biology (with Laboratory Practice) ..	11	11	11	11	11
26,28,31	Chemistry, with one term Practical ..	..	..	..	..	..
8	French (Senior)	12	..	12	¶2	12
22, 23	Physics (with Laboratory Practice) ..	..	12	..	12	..
51	(*a*) Physiology	12	12	12	12	12
51	,, (Practical)	10–12	10–12	10–12	10–12	10–12

* Or at times to be arranged. ‡ Practical work each week as arranged. Excursions every third or fourth Saturday as arranged. ¶ Honours Lecture. § Additional Honours lecture, 12 to 1 on Thursdays. (*a*) In addition, a special course (No. 46), at times to be arranged. (*b*) Composition lass, one hour a week additional.

OF ARTS.

OF LECTURES.

refer to the Synopses of Lectures on pp. 112-181.

Reference Number.	Trinity Term.					Michaelmas Term.				
	Mon.	Tues.	Wed.	Thur.	Fri.	Mon.	Tues.	Wed.	Thur.	Fri.
7	¶11	..	12	9A	11B	¶11	..	12	9A	11B
1	9	¶9	9	..	9	9	¶9	9	..	9
4	..	9	..	9	..	..	9	..	9	..
14	10	10	10	10	10	10	10	10	10	10
9	¶3	..	3	11	..	¶3	..	3	11	..
11	..	..	11	..	..	..	..	11	..	..
	..	..	..	..	..	..	..	..	..	..
20	12	12	..	12	12	..	..	..	.	..
32	..	..	..	..	..	12	12	..	12	12
	..	..	..	..	..	..	..	..	..	..
14	9	9	9	9	9	9	9	9	9	9
10	¶2, 3	..	9	11	..	¶2, 3	..	9	11	..
21-23	..	10	..	10	..	..	10	..	10	..
12	..	10	..	¶9,1	10	..	10	..	¶9,1	10
18	10	..	10	10	..	10	..	10	10	..
2	11	¶11	11	..	11	11	¶11	11	.	11
5	..	11	..	11	..	..	11	..	11	..
33	..	11	..	11	..	..	11	..	11	..
38-44	..	9	12	9	..	..	..	..	..	..
26, 31	11	11	11	11	11	..	..	..	..	..
8	12	..	12	¶2	12	12	..	12	¶2	12
15	.	12		12	9	..	12	..	12	9
51	12	12	12	12	12	..	..	..	..	..
51	..	..	..	.	..	10–12	10–12	10–12	10–12	10–12
35A & B	..	9	..	9	..	..	9	..	9	..
10	¶2, 3	..	9	11	..	¶2, 3	..	9	11	..
13	9	9	¶9	..	9	9	9	¶9	..	9
3	10	..	10	10	10	10	..	10	10	10
6	..	10	9,12	..	12	..	10	9,12	..	12
16	..	11	..	9	11	..	11	..	9	11
14	11	11	11	11	11	11	11	11	11	11
19	11	..	11	11	..	11	..	11	11	..
38–44	..	9	12	9	..	..	..	..	..	..
26, 28, 31	‡11	11	11	11	11	12	12	12	12	12
8	12	..	12	¶2	12	12	..	12	¶2	12
22, 23	..	12	..	12	..	..	12	..	12	..
51	12	12	12	12	12	..	..	..	..	..
51	10–12	10–12	10–12	10–12	10–12	10–12	10–12	10–12	10–12	10–12

‡ Students of the third year can take either the Trinity or Michaelmas Term Course.
¶ Honours Lecture.

FACULTY
TIME TABLE

N.B.—The numbers in the left-hand column

Reference Number.	Subject.	Lent Term.				
		M.	Tu.	W.	Th.	F.
	*** FIRST YEAR.**					
76	Constitutional Law	..	12–20	..	..	12–20
75	Roman Law	12–20	..	..	12–20	..
78	Status, Contracts, Torts and Crimes	5–5	..	..	..	5–5
	SECOND YEAR.					
74	Jurisprudence	..	11-20†	12	..	..
77	International Law	..	11-20†	12–45	..	..
79	The Law of Property, Conveyancing and Interpretation..	4–5	4–5	4–5	..	..
	THIRD YEAR.					
80	Procedure, Pleading & Evidence	4–5	..	4–5	4–5	..
81	Equity and Company Law, Bankruptcy, Probate and Divorce	5–5	5–5	5–5	..	

* The first two years of the course are the same as in the Faculty of Arts.
† In alternate weeks.
Note.—This time table is subject to revision.

OF LAW.

OF LECTURES.

refer to the Synopses of Lectures on pp. 112-181.

Reference Number.	Trinity Term.					Michaelmas Term.				
	M.	Tu.	W.	Th.	F.	M.	Tu.	W.	Th.	F.
76	..	12–20	..	..	12–20	..	12–20	..	..	12–20
75	12–20	..	..	12–20	..	12–20	..	..	12–20	..
78	5–5	..	5–5	..	5–5	5–5	..	5–5	..	5–5
74	..	11-20†	12	..	..	..	11-20†	12	..	..
77	..	11-20†	12–45	..	..	..	11-20†	12–45	..	..
79	4–5	4–5	4–5	..	..	4–5	4–5	4–5	..	..
80	4–5	..	4–5	..	..	4–5	..	4–5	..	4–5
81	5–5	5–5	5–5	..	..	5–5	..	5–5	..	..

FACULTY OF

TIME TABLE

N.B.—The numbers in the left-hand column

Reference Number.	Subject.	Lent Term.				
		M.	Tu.	W.	Th.	F.
	FIFTH YEAR.					
56	Midwifery..	9	9	9	9	9
57	Gynæcology (during first six weeks of Term)	..	..	..	..	..
60, 61	Medical Jurisprudence & Public Health (last four weeks of Trinity Term) ..	..	..	..	..	..
54	Medicine	12-15	12-15	12-15	12-15	12-15
63	§ Ophthalmic Medicine and Surgery ..	..	..	2	..	2
62	§ Psychological Medicine	..	..	..	..	..
17	§ Applied Logic	..	..	11	..	..
	Hospital, with Clinical and Tutorial Medicine	..	..	..	..	..

§ Until the course is completed.

MEDICINE—(Old By-laws).

OF LECTURES.

refer to the Synopses of Lectures on pp. 112-181.

Reference Number.	Trinity Term.					Michaelmas Term.				
	M.	Tu.	W.	Th.	F.	M.	Tu.	W.	Th.	F.
	..	..	..	..	..	..	..	..	..	..
57	9	9	9	9	9	..	..	..	..	..
60, 61	..	..	..	..	..	9	9	9	9	9
54	12–15	12–15	12–15	12–15	12–15	..	..	..	..	..
	..	..	..	..	..	..	..	..	..	..
62	..	..	..	..	..	..	2	..	2	..
	..	..	..	..	..	..	..	..	..	..
	..	..	..	..	..	..	..	..	..	..

FACULTY OF

TIME TABLE

N.B.—The numbers in the left-hand column

Reference Number.	Subject.	Lent Term.				
		M.	Tu.	W.	Th.	F.
	FIRST YEAR.					
38	Biology (Zoology)	11	11	11	11	11
39	Biology (Botany)	..	..	..	..	..
25, 26	Chemistry (Inorganic)	12	..	12	..	12
20	Physics	..	..	..	..	..
43, 44	*Practical Biology (A and B)	2-4	9-11	2-4	9-11	2-4
31	Practical Chemistry	..	..	..	..	..
23	*Practical Physics (A and B)	..	2-5	..	2-5	..
45	Human Anatomy (Introductory) ..	..	..	..	..	..
49	* Practical Histology (A and B) ..	..	..	..	..	..
	SECOND YEAR.					
45	Descriptive Anatomy	9	9	9	9	9
50	*Physiological Chemistry (A and B) ..	10-12	10-12	10-12	10-12	10-12
28	Organic Chemistry	..	..	..	..	..
17	Applied Logic	..	..	12	..	12
49	Physiology (Junior)	..	..	..	..	..
50	*Experimental Physiology (A and B) ..	..	..	..	..	..
48	Dissections	‡10-12	..	‡10-12	..	‡10-12
	THIRD YEAR.					
49	Physiology (Senior)	12	12	12	12	12
47	Regional Anatomy	11	11	11	11	11
52	*Pharmacology (A and B)	..	.	..	..	..
53	Pharmaceutical Chemistry and Botany (Optional for Medical Students) ..	..	..	..	..	..
48	Dissections	‡9-11	‡9-11	‡9-11	‡9-11	‡9-11
58	General Pathology	..	..	..	..	..
58	*Practical Pathology (A and B) ..	..	..	..	..	..
	*Hospital with Tutorial Surgery (B and A)	..	..	..	..	..

* Divided into two sections, A and B, which meet alternately.
‡ And afternoon.

MEDICINE—(New By-laws).

OF LECTURES.

refer to the Synopses of Lectures on pp. 112-181.

Reference Number.	Trinity Term.					Michaelmas Term.				
	M.	Tu.	W.	Th.	F.	M.	Tu.	W.	Th.	F.
	..	..	..	..	..	..	..	..	..	..
39	..	9	12	9	..	..	..	..	..	..
25, 26	11	..	11	..	11	..	..	..	..	..
20	12	12	..	12	12	..	11	..	11	..
43, 44	9-11	2-4	9-11	2-4	9-11	..	..	..	..	..
31	2-5	..	2-5	..	2-5	..	..	2-5	..	..
23	..	..	..	..	..	..	2-5	..	2-5	..
45	..	..	..	..	..	9	9	9	9	9
49	..	..	..	..	..	10-12	10-12	10-12	10-12	10-12
45	9	9	9	9	9	..	..	..	..	..
	..	..	..	..	..	..	..	..	..	..
28	..	..	..	..	..	12	..	12	..	12
	..	..	..	..	..	..	..	..	..	..
49	12	12	12	12	12	12	12	12	12	12
50	10-12	10-12	10-12	10-12	10-12	..	..	..	..	..
48	‡10-12	..	‡10-12	..	‡10-12	†	†	†	†	†
	..	..	..	..	..	..	..	..	..	..
47	12	12	12	12	12	..	..	..	..	..
52	2-4	2-4	2-4	2-4	2-4	..	..	..	..	..
53	9	..	9	..	9	..	9	..	9	..
48	‡9-12	..	‡9-12	..	‡9-12	..	..	..	..	..
58	..	..	..	..	..	2	2	2	2	2
58	..	..	..	..	..	11–1	11–1	11–1	11-1	11–1
	..	..	..	..	..	..	..	..	..	..

† Forenoon and afternoon. ‡ And afternoon.

For Fourth and Fifth Years see next page.

FACULTY OF

TIME TABLE

N.B.—The numbers in the left-hand column

Reference Number.	Subject.	Lent Term.				
		M.	Tu.	W.	Th.	F.
	FOURTH YEAR.					
58	Special Pathology	..	..	..	..	..
58	Special Bacteriology	11	11	11	11	11
55	Surgery	1.15	1.15	1.15	1.15	1.15
55	Operative Surgery	..	..	..	..	..
	Hospital, with Clinical Surgery, etc. ..	‡9-11	‡9-11	‡9-11	‡9-11	‡9-11
54	Medicine	..	..	..	..	..
56	Midwifery	..	..	..	..	..
	Hospital, with Tutorial Medicine and Out Patients	..	..	..	..	..
	FIFTH YEAR.					
54	Medicine	12	12	12	12	12
57	Gynæcology (first 6 weeks of term) ..	9	9	9	9	9
60, 61	Medical Jurisprudence and Public Health (last 4 weeks of Lent Term)	9	9	9	9	9
63	Diseases of the Eye	..	..	..	..	..
62	Diseases of the Mind	..	..	..	..	..
53	*Posology, etc. (10 lectures)	..	..	..	..	..
53	†*Special Therapeutics (15 lectures) ..	..	..	..	..	..
	Diseases of Children	..	..	..	..	..
	Diseases of the Skin	..	..	..	..	..
	Diseases of the Ear, Nose, and Throat	..	..	..	..	..
	Hospital, with Tutorial and Clinical Medicine	‡10-12	‡10-12	‡10-12	‡10-12	‡10-12

* Until the course is finished. † To commence after the course in Posology. ‡ And afternoon.

MEDICINE—(New By-laws.)

OF LECTURES.

refer to the Synopses of Lectures on pp. 112-181.

Reference Number.	Trinity Term.					Michaelmas Term.				
	M.	Tu.	W.	Th.	F.	M.	Tu.	W.	Th.	F.
58	11	11	11	11	11	..	..	..	..	..
	..	..	..	..	..	..	..	..	..	..
55	1.15	1.15	1.15	1.15	1.15	..	..	..	..	..
55	*2.15	2.15	2.15	..	2.15	..	..	..	..	..
	‡9-11	‡9-11	‡9-11	‡9-11	‡9-11	..	..	..	..	..
54	..	..	..	..	..	12	12	12	12	12
56	..	..	..	..	..	9	9	9	9	9
	..	..	..	..	..	‡10-12	‡10-12	‡10-12	‡10-12	‡10-12
	..	..	..	..	..	..	..	..	..	..
	..	..	..	..	..	..	..	..	..	..
60, 61	9	9	9	9	9	..	..	..	..	..
	..	..	..	..	..	..	..	..	..	..
	..	..	..	..	..	9	..	9	..	9
53	..	..	..	..	..	..	..	..	..	..
53	..	..	..	..	..	9	..	9	..	9
	..	..	..	..	..	..	..	..	..	..
	..	..	..	..	..	..	..	..	..	..
	..	..	..	..	..	..	..	..	..	..
	‡10-12	‡10-12	‡10-12	‡10-12	‡10-12	‡10-12	‡10-12	‡10-12	‡10-12	‡10-12

* Until the course is finished. ‡ And afternoon.

FACULTY

TIME TABLE

N.B.—The numbers in the left-hand column

Reference Number.	Subject.	Lent Term.				
		M.	Tu.	W.	Th.	F.
	FIRST YEAR.					
14	Mathematics	§9, 10	10	§9, 10	10	10
38	Biology (Zoology)	11	11	11	11	11
39	Biology (Botany)	..	..	..	..	..
25, 26	Chemistry (Inorganic) ..	12	12	12	12	12
20	Physics	..	..	..	..	..
43, 44	Practical Biology	2–4	9–11	2–4	9–11	2–4
31	Practical Chemistry	..	..	..	..	..
23	Practical Physics	..	..	..	..	..
32	Physiography..	..	..	..	..	..
	SECOND YEAR.					
14	Mathematics	9	9	9	9	9
21	Physics	..	10	..	10	..
40, 42	Biology	..	10	..	10	..
28	Chemistry (Organic)	..	..	..	..	..
33	* Geology	..	11	..	11	..
36	Practical Geology	12	..	12	..	..
51	Practical Physiology	10–12	10–12	10–12	10–12	10–12
51	‖ Physiology	12	12	12	12	12
40, 42	Practical Biology	..	2–5	..	2–5	..
23	Practical Physics	2–5	..	..	..	2–5
31	Practical Chemistry	2–5	..	2–5	..	2–5
	THIRD YEAR.					
35	†* Geology and Palæontology ..	..	9	..	9	..
41	Biology	10	..	10	..	10
51	Practical Physiology	10–12	10–12	10–12	10–12	10–12
14	Mathematics	11	11	11	11	11
34	Mineralogy	..	..	..	..	..
29	Chemistry	..	..	11	..	..
51	‖ Physiology	..	..	..	..	..
22, 23	† Physics	..	2	..	2	..
41	Practical Biology	2–5	..	2–5	..	2–5
31	† Practical Chemistry	2–5	..	2–5	..	2–5

* Excursions every third or fourth Saturday as arranged. † Practical work at times to be arranged, but with a minimum of 15 hours per week.

§ Tutorial Class.

‖ In addition, a special course (No. 46), at times to be arranged.

OF SCIENCE.

OF LECTURES.

refer to the Synopses of Lectures on pp. 112-181.

Reference Number.	Trinity Term.					Michaelmas Term.				
	M.	Tu.	W.	Th.	F.	M.	Tu.	W.	Th.	F.
14	§9, 10	10	§9, 10	10	10	10	10	10	10	10
38	..	..	..	..	..	..	..	..	..	..
39	..	9	12	9	..	..	..	..	..	..
25, 26	11	11	11	11	11	..	..	..	..	..
20	12	12	12	12	12	..	11	..	11	..
43, 44	..	..	..	..	..	2–5	..	2–5	..	2–5
31	2–5	..	2–5	..	2–5	..	..	..	..	..
23	..	2–5	..	2–5	..	..	..	..	..	..
32	..	..	..	..	..	12	12	..	12	12
14	9	9	9	9	9	9	9	9	9	9
21	..	10	..	10	..	..	10	..	10	..
40, 42	..	10	..	10	..	..	..	..	..	..
28	..	..	..	..	..	12	12	12	12	12
33	..	11	..	11	..	..	11	..	11	..
36	..	..	..	..	..	12	..	12	..	..
51	..	..	..	..	..	10–12	10–12	10–12	10–12	10–12
51	12	12	12	12	12	12	12	12	12	12
40, 42	..	2–5	..	2–5	..	..	2–5	..	2–5	..
23	..	..	..	..	..	2–5	..	..	..	2–5
31	2–5	..	2–5	..	2–5	..	..	..	..	..
35	..	9	..	9	..	..	9	..	9	..
41	10	..	10	..	10	10	..	10	..	10
51	10–12	10–12	10–12	10–12	10–12	10–12	10–12	10–12	10–12	10–12
14	11	11	11	11	11	11	11	11	11	11
34	..	12	..	12	..	‡9-11	..	‡9-11	..	‡9–11
29	..	..	11	..	..	..	..	..	..	..
51	..	..	..	..	..	12	12	12	12	12
22, 23	..	2	..	2	..	..	2	..	2	..
41	2–5	..	2–5	..	2–5	2–5	..	2–5	..	2–5
31	2–5	..	2–5	..	2–5	2–5	..	2–5	..	2–5

‡ Practical work. § Until the course is completed.

DEPARTMENT OF

CIVIL EN

TIME TABLE

N.B.—The numbers in the left-hand column refer to the Synopses of

Reference Number.	Subject.	Lent Term.				
		M.	Tu.	W.	Th.	F.
	FIRST YEAR.					
14	Mathematics	§9, 10	10	§9, 10	10	10
64	Descriptive Geometry	..	9, 11	..	9, 11	..
66	Applied Mechanics	..	..	..	..	..
25, 26, 31	Chemistry (Inorganic)	12, 2–5	12, 2–5	12	12, 2–5	12, 2–5
20, 23	Physics	..	..	..	..	..
69	Engineering Drawing	11	..	2–5	..	..
	SECOND YEAR.					
14	Mathematics	9	9	9	9	9
65	Mechanical Engineering I. ..	10	..	10	..	10–1
21, 23	Physics II...	2–5	10	..	10	2–5
70	Surveying I.	..	11	..	11	..
67	Civil Engineering I.	..	12	..	12	..
69	Engineering Drawing and Design	..	2–5	11	2–5	..
	THIRD YEAR.					
67	Civil Engineering II.	10	..	10	..	10
67	Civil Engineering III.	..	10, 2–5	..	10, 2–5	..
69	Engineering Drawing and Design	9, 2–5	..	9, 2–5	..	2–5
71	Architecture and Building Construction	..	..	..	..	..
33	Geology I.	12	11	12	11	..
70	Surveying II.	..	..	..	..	..

§ Tutorial Class.

ENGINEERING.

GINEERING.

OF LECTURES.

Lectures on pp. 112-181. The Laboratory Classes are in block type.

Reference Number.	Trinity Term.					Michaelmas Term.				
	M.	Tu.	W.	Th	F.	M.	Tu.	W.	Th.	F.
14	§9, 10	10	§9, 10	10	10	10	10	10	10	10
64	..	9	**12**	9	..	..	..	..	..	..
66	..	..	..	..	..	12	..	12, **2–5**	..	12
25, 26, 31	11	11	11	11	11	..	**2–5**	..	**2–5**	..
20, 23	12	12, **2–5**	..	12, **2–5**	12	..	11	..	11	..
69	**2–5**	..	**12**	..	**2–5**	**2–5**	..	..	..	**2–5**
					9					
14	9	9	9	9	9	9	9	9	9	9
65	10	..	10	..	**10–1**	10	..	10	..	**10–1**
21, 23	..	10	..	10	..	**2–5**	10	..	10	**2–5**
70	..	11	..	11	..	..	..	..	..	..
67	..	..	..	..	..	..	..	..	..	..
69	**2–5**	..	**11**	..	**2–5**	..	**2–5**	..	**2–5**	..
67	10, **2–5**	..	10	..	10, **2–5**	10	..	10	..	10
67	..	10	..	10	..	**12**	10	**12**	10	**12**
69	..	**2–5**	..	**2–5**	..	**2–5**	**2–5**	..	12, **2–5**	**2–5**
71	11	..	11	..	..	11	..	11	..	..
33	..	11	..	11	..	**12**	11	**12**	11	..
70	..	..	..	..	..	9	..	9	..	9

DEPARTMENT OF
MINING AND
TIME TABLE

N.B.—The numbers in the left-hand column

Reference Number.	Subject.	Lent Term.				
		M.	Tu.	W.	Th.	F.
	FIRST YEAR.					
14	Mathematics	§9, 10	10	§9, 10	10	10
64	Descriptive Geometry	..	9, 11	..	9, 11	..
66	Applied Mechanics	..	..	..	..	..
25, 26, 31	Chemistry I. (Inorganic)	12, 2–5	12, 2–5	12	12, 2–5	12, 2–5
20, 23	Physics	..	..	..	..	..
69	Engineering Drawing	11	..	2–5	..	..
	SECOND YEAR.					
21	Physics II.	..	10	..	10	..
33	Geology I.	12	11	12	11	..
65	Mechanical Engineering I.—A ..	10	..	10	..	10–1
69	Engineering Drawing and Design ..	11	..	2–5, 11	..	..
67	Civil Engineering I.	..	12	..	12	..
31	Chemistry (Quantitative Analysis) ..	2-5	2–5	..	2–5	2–5
	THIRD YEAR.					
	Geology II.—A	9	9	9	9	..
34	Mineralogy	..	..	..	..	..
31	Practical Metallurgy and Assaying I...	..	..	..	..	..
67	Civil Engineering III.—A	..	10, 2–5	..	10, 2-5	..
69	Engineering Drawing and Design ..	2–5, 10	..	..	..	2-5
70	Surveying I. and III.	..	11	..	11	..
71	Building Construction—A	..	..	..	..	..
65	Mechanical Engineering II.—A ..	12	12	12, 2-5	12	12
68	Electrical Engineering I.—A ..	..	..	11	..	11
	FOURTH YEAR.					
72	Mining	9	9	9	9	9
30	Metallurgy	10	..	10	..	10
31	Practical Metallurgy and Assaying II..	11–5	10-4	..	10-4	11–5
69	Mining and Metallurgical Design ..	..	..	11, 12 2-5	..	..

ENGINEERING.

METALLURGY.

OF LECTURES.

refer to the Synopses of Lectures on pp. 112-181.

Reference Number.	Trinity Term.					Michaelmas Term.				
	M.	Tu.	W.	Th.	F.	M.	Tu.	W.	Th.	F.
14	§9, 10	10	§9, 10	10	10	10	10	10	10	10
64	..	9	12	9	..	..	..	..	..	..
66	..	..	..	..	..	12	..	12, 2–5	..	12
25, 26, 31	11	11	11	11	11	..	2–5	..	2–5	..
20, 23	12	12, 2-5	..	12, 2–5	12	..	11	..	11	..
69	2-5	..	..	..	9, 2–5	2-5	..	..	..	2–5
21	2–5	10	..	10	2–5	..	10	..	10	..
33	..	11	..	11	..	12	11	..	11	..
65	10	..	10	..	10–1	..	..	..	..	..
69	11–1	..	11, 12	..	..	..	..	12, 2–5	..	9–1
67	..	..	..	..	..	..	..	..	..	..
31	..	2-5	2-5	2–5	..	2–5	2–5	..	2–5	2–5
	..	9	..	9	..	9	..	9	..	..
34	9-11	12	9–11	12	9–11	..	..	..	..	..
31	..	..	..	..	..	..	10–5	..	10–5	..
67	..	10	..	10	..	..	..	..	..	..
69	2-5	..	..	..	2–5	2–5	..	10 11-1	..	2–5
70	..	11	..	11	..	..	9	..	9	..
71	11	..	11	..	..	..	..	..	..	..
65	..	..	..	..	..	..	..	..	..	..
68	..	2-5	..	10, 2-5	..	..	..	..	..	..
72	9	9	9	9	9	..	..	..	..	..
30	10	..	10	..	10	..	..	..	..	..
31	11-5	10–4	..	10–4	11-5	9–4	9–4	..	9-4	9–4
69	..	..	11–12 2–5	..	..	..	..	9–1	..	..

DEPARTMENT OF
MECHANICAL AND
TIME TABLE OF

N.B.—The numbers in the left-hand column

Reference Number.	Subject.	Lent Term.				
		Mon.	Tues.	Wed.	Thur.	Fri.
	FIRST YEAR.					
14	Mathematics	§9, 10	10	§9, 10	10	10
64	Descriptive Geometry	..	9, 11	..	9, 11	..
66	Applied Mechanics	..	..	..	..	..
25,26,31	Chemistry	12, 2–5	12, 2–5	12	12, 2–5	12, 2-5
20, 23	Physics	..	..	..	..	..
69	Engineering Drawing	11	..	2–5	..	..
	SECOND YEAR.					
14	Mathematics	9	9	9	9	9
65	Mechanical Engineering I.	10	..	10	..	10–1
21, 23	Physics II.	2–5	10	..	10	2–5
70	Surveying I.	..	11	..	11	..
67	Civil Engineering I.	..	12	..	12	..
69	Engineering Drawing and Design ..	11–1	..	11–1	..	..
	Mechanical Workshop Practice ..	..	2–5	2–5	2–5	..
	THIRD YEAR.					
14	Mathematics	..	11	..	11	..
67	Civil Engineering II.—A	10	..	10	..	10
68	Electrical Engineering I.	11	..	11	..	11
65	Mechanical Engineering II.	12	12	12, 2-5	12	12
67	Civil Engineering III.—A	..	10	..	10	..
31	Chemistry	2–5	..	..	..	2–5
69	Engineering Drawing and Design ..	9	2–5	9	2–5	..
	FOURTH YEAR.					
68	Electrical Engineering II.	10	..	10	..	10
65	Mechanical Engineering III. ..	11–1	11	11-1 2-5	11	..
68	Electrical Engineering Laboratory ..	..	2–5	..	2–5	..
69	Mechanical and Electrical Design ..	2–5	12	..	12	11-1 2–5

§ Tutorial Class.

ENGINEERING.

ELECTRICAL.

LECTURES.

refer to the Synopses of Lectures on pp. 112-181

Reference Number.	Trinity Term.					Michaelmas Term.				
	Mon.	Tu.	Wed.	Th.	Fri.	Mon.	Tu.	Wed.	Th.	Fri.
14	§9, 10	10	§9. 10	10	10	10	10	10	10	10
64	..	9	12	9	..	..	..	..	..	..
66	..	..	..	..	..	12	..	12,2–5	..	12
25, 26, 31	11	11	11	11	11	..	2–5	..	2–5	..
20, 23	12	12,2-5	..	12,2–5	12	..	11	..	11	..
69	2–5	..	..	..	9 2–5	2–5	..	..	..	2–5
14	9	9	9	9	9	9	9	9	9	9
65	10	..	10	..	10–1	10	..	10	..	10–1
21, 23	..	10	..	10	..	2–5	10	..	10	2–5
70	..	11	..	11	..	..	..	..	..	..
67	..	..	..	..	..	..	..	..	..	..
69	2–5	..	11-1	..	2–5	11–1	11–1	11–1	11–1	..
	..	2–5	2–5	2–5	..	..	2–5	2–5	2–5	..
14	..	11	..	11	..					
67	..	..	..	..	..					
68	11	..	11	..	11					
65	12 2–5	12	12 2–5	12	12 2–5	WORKSHOP PRACTICE.				
67	..	10	..	10	..					
31	..	..	..	..	..					
69	9	2–5	9	2–5	..					
68	10	..	10	..	10	10	..	10	..	10
65	11-1	11	11–1 2-5	11	..	..	..	2–5	..	..
68	..	2–5	..	2–5	..	..	2–5	..	2–5	..
69	2-5	12	..	12	11-1 2–5	11–1 2–5	10–1	11–1	10-1	11–1 2–5

DEPARTMENT

TIME TABLE

N.B.—The numbers in the left-hand column

Reference Number.	Subject.	Lent Term. M.	Tu.	W.	Th.	F.
	FIRST YEAR.					
45, 46	Anatomy (Descriptive), including Anatomy of Teeth	9	9	9	9	9
20, 23	Physics and Practical Physics	..	2–5	..	2–5	..
25, 26	Chemistry and Practical Chemistry	12	12	12	12	12
31	Chemistry and Practical Chemistry	10–12	10–12	10–12	10–12	10–12
31	Practical Metallurgy	..	..	..	..	..
48	Dissections (2 terms)	..	..	..	..	..
50	Practical Histology	..	..	..	..	..
	Mechanical Laboratory	2–5	..	2–5	..	2–5
	SECOND YEAR.					
49	Physiology	..	..	..	..	..
50	Physiology—Practical	..	..	..	..	..
73	Surgical Dentistry	..	..	5	..	..
73	Clinical Dentistry	..	5	..	..	..
73	Mechanical Dentistry	5	..	..	5	..
48	Dissections (2 terms)	9–11	..	9–11	..	9–11
47	Regional Anatomy	11	..	11	..	11
	Dental Hospital	2–5	2–5	2–5	2–5	2–5
	THIRD YEAR.					
49	Physiology (Lent)	12	12	12	12	12
73*	Surgical Dentistry	..	..	..	..	..
73*	Clinical Dentistry	..	..	..	..	..
73*	Mechanical Dentistry	..	..	..	..	..
53	Materia Medica, &c.	..	9	..	9	..
59	Practical Pathology	..	..	..	..	..
59	General Pathology	..	..	..	..	..
	Dental Hospital	2–5	2–5	2–5	2–5	2–5
	FOURTH YEAR.					
55	Surgery and Special Dental Surgery	1–15	1–15	1–15	1–15	1–15
	Anæsthetics	..	..	5	..	..
	Special Clinical Courses—					
	(*a*) Medicine	..	3	..	..	..
	(*b*) Surgery	..	..	..	3	..
	Dental Hospital	10–12	..	10–12	..	10–12
	Dental Hospital	2–5	10–12	2–4	10–12	2–5
	Special Dental Clinics	..	..	4	..	..

TIME TABLE FOR

53	Materia Medica	..	..	..	..	..
31	Practical Chemistry	10–12	10–12	10–12	10–12	10–12
25	Chemistry (Introductory)	12	12	12	12	12
42	Botany	..	..	..	..	..
26	Chemistry (Metals)	..	..	..	..	..
28	Chemistry (Organic)	..	..	..	..	..

* Times to be arranged.

OF DENTISTRY.

OF LECTURES.

refer to the Synopses of Lectures on pp. 112-181.

Reference Number.	Trinity Term.					Michaelmas Term.				
	M.	Tu.	W.	Th.	F.	M.	Tu.	W.	Th.	F.
45, 46	..	..	..	..	..	..	..	12	..	..
20, 23	12	12	12	12	12	..	11	..	11	..
25, 26	11	11	11	11	11	..	..	..	..	..
31										
31	..	..	..	..	..	..	2–5	..	2–5	..
48	9–11	9–11	9–11	9–11	9–11	9	9	9	9	9
50	..	..	..	..	..	10–12	10–12	10–12	10–12	10–12
	2–5	2–5	2–5	2–5	2–5	2–5	..	2 5	..	2–5
49	12	12	12	12	12	12	12	12	12	12
50	10–12	10–12	10–12	10–12	10–12	..	..	..	..	..
73	..	..	5	..	..	..	..	5	..	..
73	..	5	..	..	..	..	5	..	..	..
73	5	..	..	5	..	5	..	..	5	..
48	2–5	..	..	..	2–5	..	..	..	..	..
47	..	..	..	..	..	..	..	..	..	..
	..	2–5	2–5	2–5	..	2–5	2–5	2–5	2–5	2-5
49	..	..	..	..	..	..	..	..	..	..
73*	..	..	..	..	..	..	..	..	..	..
73*	..	..	..	..	..	..	..	..	..	..
73*	..	..	..	..	..	..	..	..	..	..
53	..	..	..	..	..	.	..	..	..	..
59	..	..	..	..	..	11	11	11	11	11
59	..	..	..	..	..	2	2	2	2	2
	10–5	2–5	10–5	2–5	10–5	3–5	3–5	3–5	3–5	3–5
55	..	..	..	..	..	..	..	..	..	..
	..	..	..	..	..	..	..	..	..	..
	..	3	..	..	..	..	3	..	..	..
	..	..	..	3	..	..	..	..	3	..
	10–5	10–1	10–4	10–1	10–5	10–5	10–1	10–4	10–1	10–5
	..	..	4	..	..	..	..	4	..	..

PHARMACY STUDENTS.

53	9	..	9	..	9	9	..	9	..	..
31	..	..	..	..	..	..	..	..	..	..
25	..	..	..	..	..	..	..	..	..	..
42	..	9	12	9	..	..	..	..	..	..
26	11	11	11	11	11	..	..	..	..	..
28	..	..	..	..	..	12	..	12	..	12

* Times to be arranged.

FACULTY OF ARTS.—EVENING LECTURES.

* TIME TABLE.

N.B.—The numbers in the left-hand column refer to the Synopses of Lectures on pp. 112-181.

Reference Number.	Subject.	Monday.	Tuesday.	Wednesday.	Thursday.	Friday.
	FIRST YEAR.					
1	Latin	7	..	..	8	8
7	French (Junior)	..	8	8	..	..
14	Mathematics	..	7	7	..	7
11	English	9	..	..	..	..
24	† Chemistry	..	6	..	..	..
20	† Physics	..	6	..	..	..
32	† Physiography	..	..	..	6	..
	SECOND YEAR.					
15, 16	Logic and Mental Philosophy ..	..	7	8	7	..
2	Latin	8	..	..	..	7 & 9
18, 19	History	9	8	..	8	..
8	French (Senior)	..	9	7	..	8
14	Mathematics, as arranged	..	..	..	..	..
12	English	7	..	9	9	..
	THIRD YEAR.					
3	Latin	..	8	..	9	9
14	Mathematics, as arranged	..	..	..	..	..
8	French (Senior)	..	9	7	..	8
13	English	8	..	9	..	7
15, 16	Logic and Mental Philosophy ..	..	7	8	7	..
18, 19	History	9	8	..	8	..

* This time table is subject to alteration.

† Chemistry and Physics and Physiography are taken in alternate years. In 1906 Lectures are given in Physics and Physiography.

REGULATIONS FOR RESEARCH STUDENTS IN THE SCIENTIFIC LABORATORIES.

1. Research students may be admitted to the University laboratories from year to year on the recommendation of the head of the department in which they propose to work.

2. A research student in any University laboratory shall be under the control of the head of the department as regards the use of the laboratory apparatus and materials. The Professor, as director of the laboratory, shall have the right to make himself acquainted with the character and progress of the work done by any research student working in his laboratory.

3. Research students may work in the University laboratories during laboratory hours in Term time, and at such other times as may be arranged by the Professor in charge.

4. Each research student shall pay to the University a fee of five guineas per Term for the expense of material, etc.; such fee to be paid to the credit of the maintenance vote of the department. All expensive apparatus or material required for special investigations shall be purchased by the research student.

The Professor in charge shall be the sole judge of what apparatus and material should be provided by the University or purchased by the student.

The University should be provided with printed copies of all scientific papers published by research students.

LECTURE SUBJECTS FOR 1906-7.

LECTURES.

THE following regulations have been passed by the Senate:—

NON-MATRICULATED STUDENTS.

It shall be open to any non-matriculated student, who has attended the full courses of lectures upon any subject, to compete for Honours or Pass in the regular examinations upon his subject, and to have his name published and recorded in the regular class lists, with a distinguishing mark; but he shall be incapable of holding any scholarship or receiving any prize of those already established for students proceeding to a Degree.

Each such student shall be entitled to receive a certificate of attendance upon the lectures or laboratory practice in the subjects which he has selected, and proficiency therein, as ascertained by the regular and ordinary examinations within the University.

The above regulations do not apply to the lectures and examinations in the Faculty of Medicine.

The following regulation has been adopted by the Faculty of Science:—"There shall be only one standard for Honours in Scientific subjects, viz., that adopted in the Faculty of Science."

N.B.—The numbers refer to the Time Tables of Lectures on pages 90-110.

CLASSICS AND MODERN LANGUAGES.

Subjects selected for Lectures and Examinations:—

LATIN—1906.

First Year, Pass.—Livy, Book IX.; Virgil, Georgics (selections). *Add. for Honours.*—Cicero, Brutus; Virgil, Æneid VII., VIII., IX., X. Roman History to the Tribunate of Ti. Gracchus.

Second Year, Pass.—Watson's Select Letters of Cicero, parts 4 and 5; Horace, Odes. *Add. for Honours.*—Sallust, Jugurtha; Cicero, pro Lege Manilia; Catullus (selections); Terence, Phormio. *Pass and Honours.*—Roman History from the Tribunate of Ti. Gracchus to the battle of Actium.

Third Year, Pass.—Tacitus, Annals I. and II.; Cicero, de Finibus, III. and IV.; Martial, select Epigrams (*Stephenson*), Books IV. to XII. Roman History from the battle of Actium to the death of Marcus Aurelius. *Add. for Honours.*—Tacitus, Annals III. to VI.; Lucretius (selections); Horace, Epistles; Roman Literature.

LATIN—1907.

1. *First Year, Pass.*—Cicero, Philippics I., II. and V. Virgil, Æneid III and IV. *Add. for Honours.*—Quintilian X.; Virgil, Æneid I., II., V., VI. Roman History to the Tribunate of Ti. Gracchus.

2. *Second Year, Pass.*—Sallust, Catiline; Tacitus, Histories, III.; Horace, Epistles. *Add. for Honours.*—Watson's Select Letters of Cicero, Parts 1 and 2; Plautus, Captivi and Trinummus. *Pass and Honours.*—Roman History from the Tribunate of Ti. Gracchus to the battle of Actium.

3. *Third Year, Pass.*—As Second Year, Pass, with Lucretius (selections). Roman History from the battle of Actium to the death of Marcus Aurelius. *Add. for Honours.*—Lucan (selections); Tacitus, Histories I., II. and IV. Roman Literature.

GREEK.

In 1906 there will be three Pass classes in Greek. Students of the First Year reading for a Pass must attend the First Year class; but candidates for Honours in the First Year must attend the Second Year class, taking also the additional subjects prescribed for Honours.

Students of the Second Year reading for a Pass must attend the Second Year class; candidates for Honours in the Second Year must attend the Third Year class, taking the additional subjects prescribed for Honours. Those who, having read for Honours in the First Year, are not candidates for Honours in the Second Year, must attend the Third Year Pass class.

Students of the Third Year must attend the Third Year classes.

GREEK—1906.

4. *First Year, Pass.*—Demosthenes, Philippic I., Olynthiacs, I.-III.; Euripides, Orestes; Greek History to 404 B.C.; Greek Composition and Unseen Translation.

5. *Second Year, Pass.*—Thucydides, Books VII. and VIII.; Aristophanes, Birds; Sophocles, Trachiniae; Greek History to 404 B.C.; Unseen Translation.

6. *First Year, Honours.*—As *Second Year, Pass*, with Greek Lyric poetry (Tyler's selections), and Greek Composition.

Third Year, Pass.—Herodotus, Book V.; Homer, Iliad, Books 1, 3, 7-11; Æschylus, Seven against Thebes; Greek History, 404-323 B.C.; Unseen Translation.

Second Year, Honours.—As *Third Year, Pass*, with Lectures on the History of Federal Government in Greece (with History of the Achæan League—Polybius), and Greek Composition.

Additional for Third Year, Honours.—Theocritus; General Paper; Unseen Translation.

GREEK—1907.

Beginning in 1907, there will be two pass classes in Greek—Greek I. and Greek II. For the regulations concerning attendance at these classes, reference should be made to the By-laws (chap. xv., § 8 fol.). The Lectures and Examinations will embrace the following subjects:—

Greek I.—Greek Composition and Unseen Translation—Outlines of Greek History to the death of Demosthenes; Æschylus, Prometheus Vinctus; Demosthenes, Meidias.

Students seeking Honours in their First Year take Greek I., with the following additional subjects:—Thucydides, Book I.; Euripides, Bacchae; lectures on Greek Constitutional and Legal Antiquities (involving reference to the original authorities).

Greek II.—Unseen Translation — Aristophanes, Clouds; Demosthenes, De Corona; Sophocles, Œdipus at Colonus; Plato, Republic, Books I., II.

Students of the Third Year are required to take Greek II., with the following addition:—The History of Greek Tragic Drama (with special reference to the works of the great dramatists).

Students seeking Honours in their Second Year must take Greek II., with the following additions:—Greek Composition—Homer, Iliad, Books I., III., IV., VIII., IX., XI. (with special reference to the Higher Criticism of the Homeric Poems).

Students seeking Honours in their Third Year must take the same subjects as Second Year Honours men (with the exception of Greek Prose Composition), together with the following:—Advanced Unseen Translation; General Paper; Plato, Republic (the whole).

CLASSICS.

BOOKS RECOMMENDED*—

Lewis and Short's Latin Dictionary (Clarendon Press)
Roby's Latin Grammar (Macmillan).
Gildersleeve and Lodge's Latin Grammar.
Liddell and Scott's Greek Lexicon.
Goodwin's or Hadley and Allen's Greek Grammar.
Comparative Grammar of Greek and Latin, by Victor Henry, translated by R. T. Elliott; or, Giles' Manual of Comparative Philology for Classical Students (Macmillan).
Rutherford's First Greek Grammar.
Thompson, Syntax of Attic Greek.

ANCIENT HISTORY—

Mommsen's History of Rome, translated by Dickson (Bentley).
Mommsen, The Provinces under the Roman Empire.
Greenidge's Roman Public Life.
Greenidge's History of Rome (Methuen).
T. M. Taylor, Constitutional and Political History of Rome.
Pelham's Outlines of Roman History.
Bury's Student's Roman Empire (Murray).
Strachan-Davidson, Cicero. Warde Fowler, Julius Cæsar.
Grote's History of Greece.
Greenidge, A. H. J., Handbook of Greek Constitutional History (Macmillan).
Bury's History of Greece (Macmillan).

ANCIENT ATLAS—

Atlas Antiquus, *Kiepert* (Berlin).

GREEK AND ROMAN LITERATURE—

Teuffel's History of Roman Literature, translated by *Warre* (Bell).
History of Roman Literature, *Cruttwell.*
Roman Poets of the Republic, *Sellar.*
Roman Poets of the Augustan Age, *Sellar.*
Virgil, *Sellar.*
Mackail's Latin Literature.
History of Ancient Greek Literature, *Mahaffy.*

* Students are strongly recommended to order as early as possible all books that will be needed in the course of the year.

Editions of Latin Authors.

FOR PASS STUDENTS:

Cicero, 2nd Philippic, *J. E. B. Mayor* (Macmillan), or *Peskett* (Cambridge); pro Milone, *Reid* (Cambridge), or *Colson* (Macmillan); pro Sestio, *Holden* (Macmillan); pro Murena, *Heitland* (Cambridge); in Catilinam, *Wilkins* (Macmillan); pro Lege Manilia, *Wilkins* (Macmillan); Select Letters (*Text*, only), *Watson* (Oxford); pro Archia, *Reid* (Cambridge); Philippus I., II., V., King (Oxford); de Finibus (Baiter and Kayser). Tusculanæ Disputationes (Baiter and Kayser). Selected Letters, *Tyrrell* (Macmillan).

Horace, Odes, *Wickham* (Oxford), or *Page* (Macmillan); Satires, *Palmer* (Macmillan); Epistles, *Wilkins* (Macmillan).

Juvenal, *Pearson & Strong* (Oxford), or *Hardy* (Macmillan), or *Duff* (Cambridge).

Livy (text, in 8 parts, sold separately) *Madvig*; Book II., *Stephenson* (Macmillan); Books XXI., XXII. (text and notes), *Capes* (Macmillan); Book XXI. (Bell); Book XXVI., *Nicholls* (Angus & Robertson, Sydney); Book V., *Whibley* (Pitt Press); Book IX., *Stephenson* (Pitt Press), or *Woodhouse* (Clive).

Lucretius, Book I.-III., Lee (Macmillan).

Lucretius, Book V., *Duff* (Cambridge).

Pliny, Selected Letters, *Prichard & Bernard* (Clarendon Press).

Sallust, Jugurtha, *Summers*; Catiline, *Summers* (Pitt Press); Catilina, *Cook* (Macmillan).

Martial, Select Epigrams, *Stephenson* (Macmillan).

Tacitus, Annals, Books I. to IV., *Furneaux's* abridged edition; Histories, Books I., II., and Books III., IV., V., *Godley* (Macmillan).

Virgil, *Sidgwick* (each book sold separately, Cambridge), or Georgics, *Page* (Macmillan) and Æneid, *Page* (Macmillan).

FOR STUDENTS READING FOR HONOURS—

Cicero, de Finibus (Critical edition, Latin Notes), *Madvig*; Letters (select), *Watson* (Oxford); Letters, *Tyrrell* (Longmans); Philippics, *King* (Oxford); de Oratore, *Wilkins* (Oxford); de Claris Oratoribus (text and German Notes), *Jahn* or *Piderit*; or *Kellogg* (Ginn & Co.); Orator, *Sandys* (Cambridge).

Catullus, *Ellis* (Oxford), or *Simpson* (Macmillan).

Horace, Odes, Satires and Epistles, *Wickham* (Oxford); or Satires, *Palmer* (Macmillan); Epistles, *Wilkins* (Macmillan).

Juvenal, *Mayor* (Macmillan).

Lucan, *Haskins* (Bell).

Lucretius, *Munro* (Bell).

Plautus, Captivi, *Lindsay*, or *Halliddie* (Macmillan); Trinummus, *Grey* (Cambridge).

Quintilian, Book X., *Peterson* (Clarendon Press).

Tacitus, Annals, I.-VI., *Furneaux*, larger edition (Oxford); Histories, *Spooner* (Macmillan); Germania and Agricola, *Furneaux* (Oxford); Dialogus de Oratoribus, *Gudeman* (Ginn & Co.), or *Peterson* (Oxford).

Terence, *Wagner* (Bell); Phormio, *Bond & Walpole* (Macmillan).

Virgil, *Conington* (Bell).

Editions of Greek Authors.

Æschylus, Seven Against Thebes, ed. *A. W. Verrall* (Macmillan), 7/6.

Aristophanes, Clouds, Birds, Acharnians, Frogs, Knights, Peace, *Merry* (Oxford).

Aristotle, Athenaion Politeia, text and notes, *Kenyon*; translation, *Kenyon* (Bell); Poetics, text, notes and translation, ed. *Butcher*.

Demosthenes, Orations against Philip, *Abbott & Matheson* (Oxford); (Vol. I. contains Phil. I. and Olynth. I. to III. Vol. II. contains De Pace, Phil. II., De Chers., and Phil. III.), or *Sandys*, the same (Macmillan); De Corona, *Goodwin*; Meidias, the same.

Euripides, Orestes, ed. *Wedd* (Pitt Press).

Herodotus, translation by Rawlinson, with abridged notes, ed. Grant, 2 vols. (Murray); Book V., text and notes, ed. *Shuckburgh* (Pitt Press).

Homer, Iliad, *Leaf* (Macmillan), 2 vols., 2nd ed., or *Leaf & Bayfield* (Macmillan); Odyssey, *Merry* (Oxford); larger edition, Books I.-XII., *Merry and Riddell;* Books XII.-XXIV., *Monro* (Clarendon Press). Introduction to Homer, *Jebb* (Maclehose, Glasgow); Homer and the Epic, *A. Lang* (Longmans); Companion to the Iliad, *Leaf* (Macmillan); *H. Browne*, Handbook of Homeric Study; Homeric Grammar, *Monro* (Oxford); Iliad, trans. *Lang, Leaf & Myers* (Macmillan).

Polybius, History of Achæan League (selections), ed. *Capes* (Macmillan).

Sophocles, in single plays, *Jebb* (Rivington).

Theocritus, ed. *Cholmeley* (Bell); trans. *Lang* (Golden Treasury Series—Macmillan).

Thucydides, Book I., *Forbes* (Oxford); II., *Marchant* (Macmillan), or *Shilleto* (Bell); III., *Spratt* (Cambridge); IV. and V., *Graves* (Macmillan); VI., VII., *Marchant* (Macmillan); VIII., *Tucker* (Macmillan). (Translation and Notes), *Jowett* (Oxford).

Greek Lyric Poets, *Smyth* (Macmillan); Selections, ed. *H. M. Tyler* (Ginn & Co.).

FRENCH—1906.

Students in Arts may take the Junior French course in their First Year, and the Senior French course in their Second Year; but students who have already passed in the Senior course in

their Second Year may, if the time table permit, take a second Senior course in their Third Year, along with such additional work as may be prescribed.

7. *Junior Course, Pass.*—Composition: Passages for Translation (*Angus & Robertson*). Dictation. Sand, La Petite Fadette (*Rivingtons*); Racine, Britannicus (*Macmillan*); Beaumarchais, Barbier de Séville (*Clarendon Press*). *Add. for Honours.*—Rostand, L'Aiglon (*Charpentier et Fasquelle*); Voltaire, Extraits en Prose (*Hachette*); Historical Grammar (*Darmesteter*).

8. *Senior Course, Pass.*—Composition: Passages for Translation (*Angus & Robertson*). Dictation. History of Literature in the 18th Century; Rousseau, Extraits en Prose (*Hachette*); Voltaire, Extraits en Prose (*Hachette*); Lesage, Pages Choisies (*Colin*); Beaumarchais, Pages Choisies (*Colin*); Piron, La Métromanie (*Cam. University Press*). *Add. for Third Year Students.*—Choix de Lettres du XVIIIme Siècle (ed. Lanson, *Hachette*). *Add. for Honours.*—Hatzfeld et Darmesteter, Morceaux choisis des écrivains du XVIe Siècle (*Delagrave*); Rabelais, Pages Choisies (*Colin*); Literature of the 16th Century.

FRENCH—1907.

Course I., Pass.—Composition: Passages for Translation (*Angus & Robertson*). Dictation, and Lectures dealing with the authors treated. Prescribed Books: Labiche, Voyage de M. Perrichon (*Heath*); Feuillet, Un Jeune Homme Pauvre (*Heath*); Mérimée, Colomba (*Cam. Univ. Press*); Diderot, Extraits (*ed. Texte, Hachette*); La Fontaine, Choix de Fables (*ed. Geruzet et Thirion, Hachette*).

Add. for Distinction.—Historical Grammar (*Darmesteter*). Prescribed Books: Hugo, Chants du Crépuscule (*Hetzel & Cie*); George Sand, Pages Choisies (*Colin*); Boileau, Art Poétique (*Cam. Univ. Press*).

Course II. (for Second and Third Year Students).—Pass.—Composition: Passages for Translation (*Angus & Robertson*). Dictation, and Lectures on the Literature of the Romantic Period. Prescribed Books: Chateaubriand, Atala (*Heath*); Mme. de Staël, Pages Choisies (*Colin*); Hugo, Cromwell (*Hetzel et Cie*); De Musset, Trois Comédies (*Heath*); George Sand, Pages Choisies (*Colin*). *Add. for Third Year Students.*—Mérimée, Pages Choisies (*Colin*).

Add. for Distinction and Honours.—Lectures on the Literature of the Middle Ages. Prescribed Books: Extraits des Chroniqueurs (*ed. Paris et Jeanroy, Hachette*).; Chrestomathie du Moyen Âge (*ed. Paris et Langlois, Hachette*).

GERMAN—1906.

Regulations similar to those in force for the French classes hold good for the German classes, with the further proviso that, if the time table permit, students who have not taken the Junior course in German in their First Year may take it in their Second, and the Senior course in their Third Year.

9. *Junior Course, Pass.*—Composition: Passages for Translation (*Angus & Robertson*). Dictation. Hauff, Das Bild des Kaisers (*Pitt Press*); Goethe, Iphigenie auf Tauris (*Clarendon Press*); Heine, Lieder und Gedichte (*Golden Treasury*). *Add. for Honours.*—Lessing, Minna von Barnhelm (*Clarendon Press*); Sybel, Prinz Eugen von Savoyen (*Pitt Press*); Historical Grammar (*Behaghel, adapted Trechmann*).

10. *Senior Course, Pass.*—Composition; passages for Translation (*Angus & Robertson*). Dictation. History of Literature, The Romantic School. Heine, Ueber Deutschland (any edition); Arnim, Die Kronenwächter (*Spemann*); Buchheim, Balladen und Romanzen (*Macmillan*); Immermann, Der Oberhof (*Pitt Press*); Freytag, Die Journalisten (*Pitt Press*). *Add. for Third Year Students.*—Hoffmann, Kater Murr (*Reclam*). *Add. for Honours.*—Volksbuch von Faust (*Niemeyer, Halle*); Liederbuch aus dem XVI^ten^ Jahrhundert *Brockhaus*). Literature of the Reformation Period.

GERMAN—1907.

Course I., Pass.—Composition: Passages for Translation (*Angus & Robertson*). Dictation, and Lectures dealing with the authors treated. Prescribed Books: Schiller, Lied von der Glocke (*Heath*); Lessing and Gellert, Fabeln (*Cam. Univ. Press*); Heine, Harzreise (*Heath*); Kleist, Prinz von Homburg (*Reclam*); Wenckebach, Meisterwerke des Mittelalters (*Heath*).

Add. for Distinction.—Historical Grammar (*Behaghel, adapted Trechmann*). Prescribed Books: Scheffel, Ekkehard (*Whittaker*); Goethe, Hermann and Dorothea (*Cam. Univ. Press*); Herder, Cid (*Spemann*).

Course II. (*for Students of the Second and Third Years who have already taken a course in German*), *Pass.*—Composition: Passages for Translation (*Angus & Robertson*). Dictation, and Lectures on the Literature of the Classical Period. Prescribed Books: Lessing, Emilia Galotti (*Heath*); Herder, Ideen zur Philosophie der Geschichte der Menschheit (Idées sur la Philosophie de l'Histoire de l'Humanité) (*Hachette*); Wieland, Oberon (*Spemann*); Goethe, Faust, Part I. (*Longmans*). *Add. for Third Year Students.*—Schiller, Wallenstein, I. and II. (*Cam. Univ. Press*).

Add. for Distinction and Honours.—Lectures on Early German Literature. Prescribed Book: Bachmann, Mittelhochdeutsches Lesebuch (*Höhr, Zürich*).

ENGLISH—1906.

11. *First Year, Pass.*—Lectures on English Language. Chaucer, Prologue (*Clarendon Press*); Shakespeare, Merchant of Venice (*Clarendon Press*).

12. *Second Year, Pass.*—Lectures on the chief writers from Chaucer to Milton; Special subject, Shakespeare and his later dramatic contemporaries; Prescribed Books: Chaucer (*Globe Edition*); Malory, Morte d' Arthur (ed. Martin, *Macmillan*); Shakespeare, Merchant of Venice (*Clarendon Press*); Twelfth Night (*Clarendon Press*); Winter's Tale (*Macmillan*); Cymbeline (*Macmillan*); Bacon, The New Atlantis (ed. Flux, *Macmillan*); Milton, the Shorter Poems (ed. George, *Macmillan*). *Add. for Honours.*—Cook, First Book of Old English (*Ginn & Co.*); Skeat, Specimens 1394-1579 (*Clarendon Press*).

13. *Third Year, Pass.*—Lectures on the Literature of the 18th Century. Shakespeare's Comedies. Prescribed Books: Shakespeare (*Globe Edition*); Dryden, Satires (ed. Collins, *Macmillan*); Pope, Satires and Epistles (*Clarendon Press*); Coverley Papers from the Spectator (*Macmillan*); Collins, Poems (*Aldine Edition*); Goldsmith, Vicar of Wakefield (any edition); Johnson's Lives of the Poets (Arnold's Selection, *Macmillan*). *Add. for Honours.*—Andreas (*Ginn & Co.*); Elene (*Ginn & Co.*); Maclean, Old and Middle English Reader (*Macmillan*).

ENGLISH—1907.

Course I. (*for First and Second Year Students*). *Pass.*—Lectures on notable English writers. Prescribed Books: Goss,

English Literature; Chaucer, Selected Passages (*Globe Chaucer*); Shakespeare, Richard III., As You Like It, Macbeth, Tempest (*Globe Shakespeare*); Hales, Longer English Poems (*Macmillan*).

Add. for Distinction.—Sweet, Anglo-Saxon Primer (*Clarendon Press*); Maldon and Brunanburh (*Ginn & Co.*); Spenser, Faerie Queene, Book I. (*Clarendon Press*); Milton, Paradise Lost, Book I. (*Clarendon Press*).

Course II. Pass.—Lectures on the Literature of the Romantic Revival. Lectures on Shakespeare's English Histories. Prescribed Books: Shakespeare (*Globe Edition*); Cowper, The Task, etc. (*Clarendon Press*); Coleridge and Wordsworth, Lyrical Ballads, 1798 (*Duckworth*); Byron, Childe Harold III. and IV. (*Macmillan*); Shelley, Prometheus (*any edition*); Keats, Odes (*Clarendon Press*); Scott, Old Mortality (*any edition*).

Add. for Honours.—Beowulf (*Ginn & Co.*); Maclean, Old and Middle English Reader (*Macmillan*).

14. MATHEMATICS.*

CLASS EXAMINATIONS.

All students attending lectures, except the Third Year A lectures, must present themselves at the class examinations held at the end of the courses they have been attending.

Such class examinations will be held as under:—

AT THE END OF LENT TERM.

First Year in Arts	Geometry.
Third Year in Electrical and Mechanical Engineering	Differential Equations.

AT THE END OF TRINITY TERM.

First Year in Arts	Algebra.
First Year in Science	1. Logarithmic Calculation, Graphical Algebra and Elementary Analytical Geometry.
First Year in Engineering	2. Elementary Infinitesimal Calculus.
Second Year in Arts	Differential and Integral Calculus.
Second Year in Science	
Second Year in Engineering	
Third Year in Civil Engineering ..	Spherical Trigonometry.

* The lecture subjects for evening students in Mathematics are the same as those prescribed for day students of corresponding standing in the University.

AT THE END OF MICHAELMAS TERM.

First Year in Arts	Trigonometry.
First Year in Science	Elementary Statics and Dynamics.
First Year in Engineering	
Second Year in Arts	Statics and Dynamics.
Second Year in Science	
Second Year in Engineering	

YEARLY EXAMINATIONS.

Students of the First Year in Arts who pass in the Class Examinations at the end of the Lent and Trinity Terms will not be re-examined in the same subject at the Yearly Examination in December. Those who fail to pass will be re-examined, except in cases of bad failure, when the Faculty may refuse the student permission to present himself in December. The examination at the end of the Michaelmas Term will form part of the Yearly Examination.

Students of the First and Second Years in Science and Engineering and of the Second Year in Arts, who pass in the Class Examination at the end of the Trinity Term, will be held to have passed the Yearly Examination in those subjects. Those who fail to pass will be re-examined in March, except in cases of bad failure when the Faculty may refuse the student permission to present himself. The examination at the end of the Michaelmas Term will form part of the Yearly Examination.

Students of the Third Year in Arts and Science will be examined only in March.

HONOUR EXAMINATIONS.

These are specially adapted to the A Lectures, and are held in March. It is optional for the student to attend these examinations. Honours and Scholarships are awarded on the result of the Honour Examination only.

FIRST YEAR IN ARTS LECTURES.

The students of the First Year in Arts must attend one of the three courses specified below:—

FIRST YEAR IN ARTS—CLASS A.

Mondays, Tuesdays, Wednesdays and Thursdays, throughout the year, at 10 a.m., as follows:—

LENT TERM.—Geometry and Geometrical Conics (*Tu.*, *Th.*); Algebra (*M.*, *W.*).

TRINITY TERM.—Trigonometry (*M.*, *W.*);
Elementary Infinitesimal Calculus (*M.*, *W.*).

MICHAELMAS TERM.—Statics and Dynamics (*Tu.*, *Th.*);
Analytical Geometry (*Tu.*, *Th.*).

FIRST YEAR IN ARTS—CLASS B.

Tuesdays, Thursdays and Fridays throughout the year, at 10 a.m., as follows:—

LENT TERM.—Logarithmic Calculation, Graphical Algebra, and Elementary Analytical Geometry.

TRINITY TERM.—Elementary Course in the Infinitesimal Calculus.

MICHAELMAS TERM.—Elementary Statics and Dynamics.

In the Lent and Trinity Terms there is a Tutorial Class at 9 a.m. on Mondays and Wednesdays.

FIRST YEAR IN ARTS—CLASS C.

Mondays, Wednesdays and Fridays throughout the year, at 10 a.m., as follows:—

LENT TERM.—Geometry.

TRINITY TERM.—Algebra.

MICHAELMAS TERM.—Trigonometry.

SECOND YEAR IN ARTS.

Students of the Second Year in Arts may attend either of the two courses specified below.

SECOND YEAR IN ARTS—CLASS A.

Mondays, Tuesdays, Thursdays and Fridays, throughout the year, at 9 a.m., as follows:—

LENT TERM.—Differential and Integral Calculus (*M.*, *Th.*);
Analytical Geometry (*Tu.*, *F.*).

TRINITY TERM.—Differential and Integral Calculus (*continued*) (*M.*, *Th.*);
Analytical Statics (*Tu.*, *F.*).

MICHAELMAS TERM.—Differential Equations (*M.*, *Th.*);
Dynamics of a Particle (*Tu.*, *F.*).

SECOND YEAR IN ARTS—CLASS B.

Tuesdays, Wednesdays and Fridays, throughout the year, at 9 a.m., as follows:—

LENT TERM.—Differential and Integral Calculus.

TRINITY TERM.—Differential and Integral Calculus.

MICHAELMAS TERM.—Statics and Dynamics.

In the Lent and Trinity Terms there is a Tutorial Class at the same hour on Mondays and Thursdays.

THIRD YEAR IN ARTS.

Students of the Third Year must attend the following course:—

Third Year in Arts—Class A.

At 11 a.m. throughout the year, as follows:—

Lent Term.—Solid Geometry (*M.*, *W.*, *F.*);
Higher Infinitesimal Calculus and Differential Equations (*continued*) (*Tu. Th.*).

Trinity Term.—Rigid Dynamics (*M.*, *W.*, *F.*);
Spherical Trigonometry (*Tu.*, *Th.*).

Michaelmas Term—(i.) A course of lectures will be given on the Mathematical Theory of one of the following subjects:—Electricity and Magnetism; Sound; Hydrostatics and Hydrodynamics; Heat; Elasticity (*M.*, *W.*, *F.*)*
(ii.) Astronomy (*Tu. Th.*).

FIRST YEAR IN SCIENCE AND ENGINEERING.

This class meets on Tuesdays, Thursdays and Fridays at 10 a.m. The course of study is the same as that of the First Year Arts, Class B. Every student must also attend the Tutorial Class on Mondays and Wednesdays in the Lent and Trinity Terms at 9 a.m. Students, who desire to do so, may, with the permission of the Professor, take the Honours Class of the First Year in Arts, and such attendance will exempt them from both of the above Classes.

SECOND YEAR IN SCIENCE AND ENGINEERING.

This class meets on Mondays, Wednesdays and Fridays at 9 a.m. The course of study is the same as that of the Second Year Arts, Class B. Every student must also attend the Tutorial Class on Mondays and Thursdays at 9 a.m. Students, who desire to do so, may, with the permission of the Professor, take the Honours Class of the Second Year in Arts, and such attendance will exempt them from both of the above Classes.

THIRD YEAR IN SCIENCE AND ENGINEERING.

Students in Electrical and Mechanical Engineering	Differential Equations, Tuesdays and Thursdays at 11 a.m., Lent Term.
Students in Civil Engineering	Spherical Trigonometry, Tuesdays & Thursdays at 11 a.m., Trinity Term.

THIRD YEAR IN SCIENCE.

The course of study is the same as that of the Third Year in Arts.

* In 1906 this course will be upon the Mathematical Theory of the Conduction of Heat, and in 1907, upon the Mathematical Theory of Electricity.

BOOKS RECOMMENDED FOR THE USE OF STUDENTS.

Matriculation (November, 1906) Honours.

See Manual of Public Examinations for 1906, pp. 16, 17, and Appendix pp. lxxxiii.-iv.

Matriculation (March, 1907) Pass.

Division A—Lower Mathematics.

Any of the text-books in common use for the papers in Arithmetic, Algebra, and Geometry of the Junior Public Examination.

Division B—Higher Mathematics.

Geometry.—Any of the text-books in common use for the Geometry paper of the Senior Public Examination. This examination will not include Schedules C and D of the regulations for the Geometry paper in the Senior Examination. Otherwise the regulations for the papers in the two examinations are the same.

Algebra.—Any of the ordinary text-books on Algebra.

Trigonometry.—Any of the ordinary text-books on Trigonometry. Four Figure Tables to be used.

First Year Arts.

Class A—

Richardson and Ramsay's Geometry.
Hocevar's Solid Geometry.
Jessop and Gaunt's Geometrical Conics.
C. Smith's Conic Sections.
C. Smith's, Hall and Knight's, or Chrystal's Algebra.
Carslaw's Introduction to the Calculus.
Loney's or Hobson's Trigonometry.
Hicks' Elementary Dynamics.

Class B—

Any ordinary text-book on Trigonometry.
Hall's Introduction to Graphical Algebra.
Briggs and Bryan's Coordinate Geometry, Part I.
Morley, Mechanics for Engineers.
Carslaw's Introduction to the Calculus.

Class C—

Barnard and Child's Geometry for Senior Forms.
Any ordinary text-book on Algebra.
Borchardt and Perrott's Trigonometry, Part I., or
Loney's Trigonometry, Part I.

Second Year Arts.

Class A—In addition to those for the First Year—

Lamb's Infinitesimal Calculus.
Routh's Statics, Vol. I.
Forsyth's or Murray's Differential Equations.
Love's Theoretical Mechanics.
Besant's Dynamics; and the following, though not necessary, will be referred to—
Williamson's Differential and Integral Calculus.
Frost's Curve Tracing.

Class B—In addition to those of the First Year—

Gibson's Introduction to the Calculus.
Murray's Differential Equations.
Besant's Dynamics; or Tait and Steele's Dynamics of a Particle.

Third Year Arts.

Class A—

C. Smith's Solid Geometry.
Routh's Rigid Dynamics, Vol. I.
Todhunter and Leathem's Spherical Trigonometry.
Barlow and Bryan's Astronomy.
Carslaw's Fourier's Series and the Mathematical Theory of the Conduction of Heat; and the following, though not necessary, will be referred to—
Frost's Solid Geometry.
Salmon's Solid Geometry.
Williamson's Differential and Integral Calculus.
Goursat, Cours d'Analyse Mathematique.
Gray's Treatise on Physics, Part I.

First Year Science and Engineering.

Same as First Year Arts, Class B.

Second Year Science and Engineering.

Same as Second Year Arts, Class B.

Third Year Science.

Same as Third Year Arts, Class A.

LOGIC AND MENTAL PHILOSOPHY.

Courses of lectures on the following subjects will be delivered during 1906.

FACULTY OF ARTS—SECOND YEAR.

15. (*a*) Introduction to the Study of Philosophy.—An historical and critical account will be given of the main problems of Philosophy as they appeared to primitive and classical thought, and as contrasted with similar but more complex problems in modern times. The mutual relation of the different departments of Philosophy will be illustrated by reference to the historical development of ancient thought from the pre-Socratic schools of Greek Philosophy down to Stoicism, Epicureanism, and Scepticism.

(*b*) Logic.—This subject will be treated in connection with the different methods actually made use of in the various departments of knowledge. An account will be given of the fundamental processes of analysis and synthesis as employed in ordinary knowledge, and in the different orders of the sciences. Deduction will be discussed in connection with the formal

sciences, and the nature and stages of inductive investigation will be illustrated by reference to the practice of the physical and natural sciences. An account will also be given of the aim and methods of the moral sciences, and of the application of scientific method to the data of psychology, sociology, and history.

(*c*) PSYCHOLOGY.—Analysis of the conditions and laws of the mental processes. Sensation and perception. The nature and conditions of attention. Association and reproduction of mental states. Memory and imagination. Stages in the development of mental life. Thought and language. The intellectual, æsthetic, moral, and religious sentiments. Feeling, impulse, and desire. Character and will.

BOOKS REQUIRED—*Pass*—Mellone's Text-book of Logic (*Blackwood*); Welton's Logical Bases of Education (*Macmillan*); James' Text-book of Psychology (*Macmillan*); Külpe's Introduction to Philosophy (*Sonnenschein*). *Additional for Honours*—Hibben's Inductive Logic (*Blackwood*); Bosanquet's Essentials of Logic (*Macmillan*); Mill's Logic (*Longmans*).

FACULTY OF ARTS—THIRD YEAR.

16. (*a*) HISTORY OF PHILOSOPHY.—Courses of lectures on different epochs in the History of Philosophy will be given from year to year. The course to be given this year will be confined to the history of Oriental and Greek thought. The following subjects will be discussed:—Pantheism, mysticism, and dualism as they appear in early Eastern thought, and as compared with later developments. The various factors which enter into the formation of national thought, as illustrated by the origin and development of Greek philosophy. The early "nature philosophers" of Greece. The conflict between science and religion in the time of Socrates. The ethical and political systems of Greece, and of the leading Greek philosophers. The rise of individualism and the antecedents of Christianity.

(*b*) ETHICAL AND SOCIAL PHILOSOPHY.—The psychological and sociological basis of ethics. Analysis of the early stages of the moral consciousness, with special reference to the social factors involved. Ethics as a deductive science, and ethics as a positive science. Relation of ethics to psychology, sociology, and metaphysics. The nature and influence of custom. The family in ancient, medieval, and modern times. The formation of social classes. The development of the state from ancient to modern times. The social ideal—order, freedom, justice. The

antithesis of liberty and solidarity. The different conceptions, juridical, ethical, and political, of justice. The rights of person, property, and contract. Personality as moral and social ideal. Individualism and socialism. The collectivist theory of society as developed by Karl Marx and his successors.

BOOKS REQUIRED.—*Pass*—Fairbanks' Introduction to Sociology; Sidgwick's History of Ethics (*Macmillan*); Mackenzie's Manual of Ethics (*Clive*). *Additional for Honours*—Bosanquet's Psychology of the Moral Self (*Macmillan*); Green's Principles of Political Obligation (*Clarendon Press*); Green's Prolegomena to Ethics (*Clarendon Press*); Mackenzie's Social Philosophy (*Maclehose*).

Lectures on the above-mentioned subjects will be delivered during 1906 as follows:—

To second year Arts students—Introduction to the Study of Philosophy; Logic; Psychology.

To third year Arts students—History of Ancient Philosophy; Ethical and Social Philosophy.

To second and third year evening students—Introduction to the Study of Philosophy; Logic; Psychology.

Each of these three courses will consist of ninety lectures. All students are required to perform the class exercises and to take part in *vivâ voce* and written examinations as part of the ordinary class work.

POST GRADUATE CLASS.

A Post Graduate Class will be formed each year for the more advanced study of philosophical topics. Subject of study for the Post Graduate Class of 1906—THE THEORY OF PSYCHO-PHYSICAL PARALLELISM IN MODERN PSYCHOLOGY. Only graduates of a recognised University, who have already gone through a two years' course of training in Philosophy, are eligible for admission to this class.

FACULTY OF MEDICINE.

17. A special course of lectures on logic will be delivered during Lent Term to second year students in the Faculty of Medicine. The course will consist of twenty lectures, to be delivered twice a week, on Wednesdays and Fridays, at twelve noon.

The following subjects will be discussed in the lectures:—Classification of the sciences. The nature of scientific method. Analysis and synthesis as exemplified in the different orders of the sciences. The methods of the mathematical sciences. The

principles of syllogistic reasoning. The methods of the physical sciences—observation, experiment and hypothesis. The ground of induction. Law and cause. The methods of the natural sciences. Classification, analogy and empirical definition. The function of deduction in the physical and natural sciences. An account will be given of some of the leading unifying conceptions in modern science, including the conception of the unity of the physical forces and the theory of evolution.

Students will be examined on the subject as discussed in the lectures, and no special textbook will be prescribed. For preparatory study, Welton's Logical Bases of Education is recommended.

HISTORY.

The following will be the subjects of study in 1906 :—

18. For Second Year Students.

PASS—The History of the British Empire from 1558 to 1763.

BOOKS RECOMMENDED.—Green's Short History, pp. 361 to 743: Beeslay's Elizabeth ; Gardiner's Puritan Revolution ; Harrison's Cromwell ; Seeley's Expansion of England, pp. 1 to 140 ; Woodward's Expansion of the British Empire, pp. 1 to 208 ; Corbett's Drake.

Students will be required to write essays, and to take examination papers in the course of the year. The essays should be of not less than 3, and of not more than 8 pages.

The following additional work will be required from those who seek Honours :—

1. The reign of Elizabeth.

   BOOKS RECOMMENDED in addition to those mentioned above :— Prothero's Statutes, introduction and pp. 1 to 249 ; Harrison's Description of England (ed. Withington) ; Voyages of Elizabethan Seamen (ed. Payne), first series, introduction, and pp. 1 to 81, 193 to 272 ; Froude's Elizabethan Seamen ; Corbett's Drake ("English Men of Action") ; Creighton's Elizabeth.

2. The English Colonies in America to 1763.

   BOOKS RECOMMENDED.—Thwaite's Colonies ; Fiske's New England, Virginia, Dutch and Quaker Colonies, New England and New France ; Parkman's Struggle for a Continent.

3. Essays to be written in the course of the year. The essays should be of not less than 25 pages, and of not more than 50 pages.

19. For Third Year Students.

PASS—History of the British Empire from 1756 to 1867.

BOOKS RECOMMENDED.—Bright's History of England, vols. 3 and 4; Hunt's History of England, from 1760 to 1801, may be read instead of Bright for that period; Lecky's History of England, chaps. 12 and 14; Burke's Taxation of America, Conciliation with America, and Letter to the Sheriffs; Gibbins's Industry in England; Seeley's Expansion of England; Rosebery's Pitt; Carlyle's Past and Present.

Students will be required to write essays, and to take examination papers in the course of the year. The essays should be of not less than 3, and of not more than 6 pages.

The following additional work will be required from those who seek Honours:—

1. The British Empire, 1760 to 1797.

BOOKS RECOMMENDED in addition to those mentioned above:—Lecky, chaps. 10, 11, 12, 14, 15, and 18 (pp. 1 to 74), 21, 22, 23; Trevelyan's Fox and American Revolution; Smith's Wealth of Nations, book 4, chaps. 1, 7, 8; Burke's Reflections; Paine's Common Sense, and Rights of Man; Young's Travels in France; Toynbee's Industrial Revolutions, pp. 27 to 154; McCunn's Ethics of Citizenship; Morley's Burke.

2. The History of Europe from 1789 to the present time.

BOOKS RECOMMENDED.—Syme's French Revolution; Fyffe's Modern Europe; Phillip's European History, 1815 to 1899; Seeley's Napoleon; Dickinson's Revolutions and Reactions in Modern France; Cesaresco's Liberation of Italy; King's Mazzini; Hedlam's Bismarck.

3. Essays to be written in the course of the year. The essays should be of not less than 35 pages, and of not more than 100 pages.

Those students only will be allowed to take Honours who have in their Second Year attended the lectures in History, and who have passed the examination with Honours. Those only will be placed in the First Class who have gained First or Second Class Honours in History in their Second Year.

PHYSICS.

FOR FIRST YEAR STUDENTS.

20.—An introductory course of about thirty lectures in Trinity Term on the Elementary Principles of Mechanics, Properties of Matter, Sound, Heat and Light.

Text Book.—Watson's Text-book of Physics.

20A.—A course of twenty lectures in Michaelmas Term, consisting generally of the more precise treatment of the subjects of the previous Term's lectures, chiefly in Heat, Light, and Electricity and Magnetism.

Candidates for Honours and Scholarships are required to attend courses 20 and 20A and the First Year Practical Class for one Term.

FOR SECOND YEAR STUDENTS.

21.—A course of sixty lectures on the Properties of Matter, Heat, and Electricity and Magnetism.

FOR THIRD YEAR STUDENTS.

22.—A course of sixty lectures on Physical Optics, Acoustics, and Electricity and Magnetism.

For Honours the examination will include the subjects of the Second Year.

PHYSICAL LABORATORY.

The Physical Laboratory was designed by Richard Threlfall, M.A., F.R.S., then Professor of Physics in the University, and was built under his supervision. The building was commenced in 1886, and completed early in 1888. Considerable additional laboratory accommodation was provided in 1901 by an extension of one side of the building.

The Laboratory was founded for the encouragement of the study of Physical Science, and its object is not only to afford facilities for imparting instruction but also for aiding research.

23.—PRACTICAL PHYSICS.

FIRST YEAR.

The course consists of quantitative experiments in the following:—

Measurement of Length. Estimation of Mass. Determination of Density. Thermometry and Expansion. Calorimetry. Determination of Musical Pitch. Measurement of Velocity of Sound in the Air and in Solids. Reflection and Refraction of Light. Total Reflection. Refractive Indices. Elementary Spectroscopy. Double Refraction. Polarisation of Light. Fundamental Experiments of Electro-statics. Electrometer and Galvanometer Measurements. Measurement of Resistance. Electro-magnetic Induction.

Text Book.—Practical Physics, Glazebrook and Shaw.

All students attending the Physical Laboratory are required to keep a record of their practical work in special note-books, to be obtained from W. E. Smith, Bridge Street. These note-books form the basis on which marks are allotted for Practical Physics at the annual examination.

Students presenting themselves for examination in Physics at the end of any Academic Year during which they have not attended the Laboratory must also present themselves for examination in Practical Physics.

SECOND YEAR.

The course consists of quantitative experiments in the following:—

Expansion of Solids and Gases. Elasticity of Solids. Measurement of Time. Determination of Moments of Inertia. Pendulums. Magnetic Measurements. Relation between Magnetic Force and Magnetic Induction in Metals, investigated magnetometrically and ballistically. Determination of the Magnetic Elements. Accurate Comparison of Resistances. Electrolytic Measurement of Currents. Comparison of Electromotive Forces. Measurement of Capacity. Fundamental Experiments of Electro-magnetism. Measurement of Mutual and Self Induction, &c.

Text Book.—Practical Physics, Glazebrook and Shaw; and Practical Electrical Testing in Physics and Electrical Engineering, Aspinall Parr.

THIRD YEAR.

Advanced Physical Measurements.

Text Book.—Physical Measurements, Kohlrausch (translated by Waller and Procter, Churchill, London). Threlfall's Laboratory Arts.

BOOKS RECOMMENDED.

For First Year Students.

Watson's Text-book of Physics.

For Second and Third Year Students.

General Physics.—Maxwell's Matter and Motion. Everett's C.G.S. System of Units. Worthington's Dynamics of Rotation. Tait's Properties of Matter. Poynting and Thomson's Properties of Matter. Lord Kelvin's Article on Elasticity in the Encyclopædia Britannica. Todhunter's History of Elasticity. Kelvin and Tait's Natural Philosophy. J. J. Thomson's Application of Dynamics to Physics and Chemistry. Whetham's Solution. Jevons' Principles of Science.

Heat.—Preston's Theory of Heat. Poynting and Thomson's Heat. Maxwell's Theory of Heat. Tait's Heat. Balfour Stewart's Treatise on Heat. Ewing's Steam Engine and other Heat Engines. Clausius' Mechanical Theory of Heat.

Light.—Schuster's Theory of Optics. Preston's Theory of Light. Verdet's Optique. Mascart's Optique. Drude's Optics.

Sound.—Poynting and Thomson's Sound. Lord Rayleigh's Sound. Helmholtz's Sensations of Tone.

Electricity and Magnetism.—J. J. Thomson's Elements of the Mathematical Theory of Electricity and Magnetism. Clerk Maxwell's Elementary Electricity. Clerk Maxwell's Electricity and Magnetism. J. J. Thomson's Recent Researches in Electricity and Magnetism, Conduction of Electricity through Gases, and Electricity and Matter. Rutherford's Radio-activity. Ewing's Magnetic Induction in Iron and other Metals. Fleming's Alternate Current Transformer. Steinmetz Alternating Current Phenomena.

CHEMISTRY.*

INTRODUCTORY COURSE FOR FIRST YEAR ARTS STUDENTS.

24.—This course deals with the principal non-metals and their most important compounds, the laws of chemical combination, the atomic theory, the use of chemical formulæ, and the elements of physical chemistry.

BOOKS RECOMMENDED.—Perkin and Lean's Introduction to the Study of Chemistry; Dobbin and Walker's Chemical Theory for Beginners; Whiteley's Chemical Calculations.

THE NON-METALS.

25.—This course is on the general principles of chemistry; the non-metallic elements and their principal compounds; certain of the common carbon compounds of everyday life; and such processes as combustion and respiration. The metals as a class, and their chief compounds with the non-metals.

The course is delivered in Lent Term, and is intended for students in the Faculties of Medicine and Science.

Students in the Faculties of Medicine and Science are also required to attend the Tutorial Class, which meets once a week.

Candidates for Honours and Scholarships are required to attend the Laboratory for one Term.

Text Books.—Thorpe's Non-metals; Shenstone's Elements of Inorganic Chemistry, or other similar text book.

* A fuller syllabus can be obtained in the Registrar's Office or at the Laboratory.

THE METALS.

26. A course of lectures upon the Metals and their principal compounds and alloys is given daily during Trinity Term. Compulsory for students in the Faculties of Medicine and Science and the Departments of Engineering, Pharmacy and Dentistry.

Text Books.—Thorpe's Metals, Tilden's Inorganic Chemistry.

ENGINEERING CHEMISTRY.

27. A course of lectures upon the Chemistry of Materials used in Engineering and Building Construction.

BOOKS RECOMMENDED.—Chemistry for Engineers and Manufacturers, by Blount and Bloxam (C. Griffin & Co.); Engineering Chemistry, by Phillips (Lockwood); Engineering Chemistry, by Stillman, Chem. Pub. Co., Pa.

ORGANIC CHEMISTRY.

28. A course of lectures upon the Carbon Compounds is given during Michaelmas and Lent Terms. Compulsory for students in the Faculties of Science and Medicine.

Text Books.—Organic Chemistry by Perkin and Kipping.

Reference.—Roscoe and Schorlemmer's Treatise on Chemistry.

TUTORIAL CLASS IN CHEMISTRY.

A Class for Calculations and similar exercises meets once a week during term. Attendance is compulsory for students in the Faculties of Medicine and Science and Departments of Engineering, Pharmacy and Dentistry.

CHEMICAL PHILOSOPHY.

29. A course upon the History of Chemical Philosophy and Discovery is given during Lent and Trinity Terms for students of the Third Year in the Faculty of Science, and Undergraduates in Medicine who are candidates for the Degree of B.Sc. in Chemistry.

Text Books.—History of Chemistry, E. von Meyer (McM. & Co.), Van't Hoff's Physical Chemistry (Arnold). Walker's Physical Chemistry. Theoretical Chemistry, by W. Nernst (McM. & Co.), or Meyer's Modern Theories of Chemistry (Longmans & Co.), or Ostwald's Outlines of General Chemistry, Ostwald's Solutions (McM. & Co.).

GENERAL BOOKS OF REFERENCE.—Roscoe and Schorlemmer's Treatise on Chemistry, Mendeléef's Principles of Chemistry, Morley & Muir's Dictionary of Chemistry, Thorpe's Dictionary of Applied Chemistry, Alembic Club Reprints, and certain current literature.

NOTE.—Arts students of the Second or Third Years may take up Courses 25, 26 and 28 as a voluntary subject, provided that

such students have passed the Annual Examination upon the Introductory Course, No. 24; but an Arts student who has taken up these courses in his Second Year cannot be allowed to take up the same courses again in the Third Year.

NOTE.—Students in the Second and Third Years in the Faculty of Science, who select Chemistry as one of their subjects, are required to go through a course of QUANTITATIVE ANALYSIS, and to be examined in the same. This applies also to students in the FACULTY OF MEDICINE, who take up the advanced course in Chemistry to qualify for the B.Sc. Degree.

Students in the Mining Branch of Engineering are required in their Second and Third Years to go through a course of QUANTITATIVE ANALYSIS, ASSAYING and PRACTICAL METALLURGY, and to be examined in the same.

AMBULANCE COURSE.

Students in Mining Engineering are required to have attended an Ambulance Course upon First Aid, and to have passed an Examination in the same before proceeding to the Bachelor's Degree.

PRACTICAL CHEMISTRY.

THE CHEMICAL AND METALLURGICAL LABORATORIES.

The Chemical Laboratory was built in 1889. The building is a plain rectangular structure, about 170 feet long by 86 feet wide. A new Assay Laboratory, 55 by 44 feet, and a Milling and Leaching Room, 35 by 100 feet, have recently been added. There are also open and covered yards for out-door operations.

The small lecture room will seat 108, and the larger one about 170 students.

The Junior Laboratory contains 40 benches, and the Senior Laboratory will take about 45 advanced students. There are also separate rooms for spectroscopic and gas analysis, for photography and for research work. A room is set apart for Chemical Collections, and for old forms of apparatus, etc., of historical interest.

The building is provided with the electric light throughout the upper floor, and the gas engine for driving the dynamos is attached to shafting connected with the grinding machines, apparatus for the liquefaction of gases, and similar appliances

necessary for a large laboratory. Leads are carried to convenient places in the laboratories, so that if necessary the full power of the dynamos may be used for experimental purposes.

Special efforts have been made to give the students the benefits of modern improvements and appliances, and particularly those which tend to save time; draught cupboards, filter pumps, exhaust pipes, and similar conveniences are fitted to each bench. A number of hoods and draught cupboards for combustions, sulphuretted hydrogen gas, water baths, and ovens are also provided. There are three balance rooms, each 21 by 16 feet, and one 30 by 20 feet, provided with balances for different purposes, which, to prevent vibration, rest on slate benches, supported upon stone brackets.

The Metallurgical Laboratories contain 44 fusion and muffle assay furnaces, and an experimental reverberatory furnace with a bed 6 feet by 4 feet.

The plant for the concentration and treatment of metalliferous ores includes a challenge ore feeder, set of stamps, Gates' rock breaker, Rogers' crushing rolls, Chilian mill, Carter's disintegrator; Krupp ball mill; elevator; trommels, samplers, amalgamating plates and pans, spitzkasten; a Frue vanner, Wilfley concentrator, plunger jigs, settling tanks, magnetic concentrator, etc. Also vats and the necessary appliances for the extraction of gold and silver ores by chlorine, cyanide, hyposulphite, and other similar leaching processes.

31.—PRACTICAL COURSES.

A.—Introductory Course for Junior and Medical Students.

This course consists of thirty exercises of three hours each.

1. Glass working.—Rounding the ends of rods and tubes, drawing, bending and joining tubes, blowing bulbs, mending test tubes.

2. The preparation and property of gases, *e.g.*, hydrogen, oxygen, carbon monoxide, carbon dioxide, the oxides of nitrogen and sulphur; chlorine, hydrochloric acid, hydrofluoric acid, ammonia, etc.

3. The structure of flame; flame reactions; use of blowpipe; reduction of metals on charcoal; incrustations; flame and film tests; borax and microcosmic salt beads.

4. Use of the Spectroscope.

5. Reactions of Reagents.

6. Qualitative Analysis by wet and dry processes.

7. Reactions and processes for the detection of the alkaloids, sugars, starch, glycerol, alcohol, fusel oil, carbolic acid and similar common substances.

Students *require* one of the following books—Qualitative Analysis (*Thorpe and Muir*), Qualitative Analysis (*Fresenius*), Tables for Qualitative Analysis (*A. Liversidge, M.A., F.R.S.*), Analytical Chemistry, Vol. I. (*Treadwell*). Ostwald's Foundations of Analytical Chemistry (*Macmillan*) is also recommended for further study.

B.—Elementary Quantitative Courses for First Year Students in the Departmeent of Engineering.

Testing balance and weights. Estimation of filter ash. Simple gravimetric estimations, such as Copper in Copper sulphate, Lead in Lead nitrate, Chromium in Potassium dichromate, Mercury in Mercuric chloride. Testing calibration of Burette, Pipette and Flask. Use of Gooch crucible and of weighed filter paper. Preparation of standard alkali and acid solutions. Use of indicators—litmus, methyl orange, and phenolphthaleïn.

C.—Course in Engineering Chemistry for Second Year Students in the Department of Engineering.

Examination of water for boiler purposes. Examination of lubricating oils and paints. Analysis of cements. Analysis of furnace gases.

D.—Course in Quantitative Work and the Preparation of Typical Carbon Compounds for Medical and Pharmacy Students.

Testing balance and weights. Determination of specific gravities. Testing calibration of Burette, Pipette and Flask. Preparation of litmus solution. Preparation of standard acid and alkali solutions. Use of indicators, methyl orange, and phenolphthaleïn. Preparation of Ethyl Iodide, Acetic Aldehyde, Ethyl Acetate, Ethyl Alcohol, Acetic Acid, Acetone, Aniline and Urea.

ADDITIONAL COURSE FOR ADVANCED PHARMACY STUDENTS.

Volumetric Analysis.—Estimation of iron, chlorine and arsenious oxide.

Gravimetric Analysis.—Estimation of iron, antimony, phosphoric acid and silver.

E.—COURSE FOR CANDIDATES FOR THE B.Sc. DEGREE IN CHEMISTRY AND B.E. DEGREE IN MINING AND METALLURGY.

Part IV. is not compulsory for candidates for the B.E. Degree.

PART I.—1. Verification of weights. 2. Determination of ash in filter paper. 3. Copper Sulphate. 4. Potassium dichromate. 5. Calcite. 6. Sodium chloride. 7. Rochelle Salt. 8. Ammonio-ferrous Sulphate. 9. Lead Nitrate. 10. Siderite. 11. Dolomite. 12. Apatite. 13. Orthoclase. 14. Niccolite (kupfernickel). 15. Smaltite (Co, Ni and As.). 16. Copper pyrites. 17. Topaz.

PART II. — Certain of the following: — 18. Blende. 19. Zinc Silicate. 20. Pyrolusite. 21. Chromite. 22. Wolfram. 23. Mispickel. 24. Fahlore. 25. Petalite. 26. Beryl. 27. Strontianite. 28. Cinnabar. 29. Coinage-bronze. 30. Lead, tin, bismuth, cadmium alloy. 31. Ilmenite. White lead and pigments. Cements. Iron Ores. Iron and Steel. Fireclay. Oils. Mineral Oils—including flashing points. Coal Gas. Furnace Gases. Coal, including ash and calorific power. Coke. Water for domestic and manufacturing purposes.

PART III.—Volumetric Analysis:—1. Chlorine. 2. Silver. 3. Potassium and sodium. 4. Sodium hydroxide. 5. Iron by permanganate and dichromate solutions. 6. Bleaching powder. 7. Nitric acid. 8. Chloric acid. 9. Ammonia.

PART IV.—Organic Chemistry, &c.:—1. Exercises in the purification of substances, including fractional crystallisation and distillation. 2. Boiling and melting points 3. Specific gravities. 4. Ultimate analyses. 5. Vapour density. 6. Molecular weights. 7. Use of polariscope. 8. Preparation of carbon compounds.

Text Books.—Quantitative Analysis, by Clowes and Coleman; Fresenius' Quantitative Analysis; Treadwell's Quantitative Analysis; Sutton's Volumetric Analysis; Phillips' Engineering Chemistry; Wöhler's Mineral Analysis.

F.—Assaying and Metallurgical Course.

Candidates for the B.E. Degree in Mining and Metallurgy are required to take the following course:—

Technical examination of Fuels and Fireclays.

Dry assay of Gold, Silver, Lead, Tin and Mercury Ores.

Assay of Silver and Gold Bullion.

Volumetric methods for Copper, Zinc, Lead, Manganese and Iron.

Electrolytic and Colorimetric methods for Copper. Examination of the Cornish dry process.

Complete analysis of Slag.

Complex Gold and Silver Ores.

Iron and Steel Analysis.

Analysis of Furnace Gases.

The treatment of bulk samples of ores, viz.: crushing, grinding, roasting, sampling, concentrating (including vanning), and leaching.

Note.—Students are required to preserve and label their metallurgical preparations, alloys, slags, and metallic buttons for the inspection of the Examiners at the end of the course.

Books Recommended.—Beringer's Text Book of Assaying; or one of the following:—Guide Pratique du Chimiste, Métallurgiste et de l'Essayeur par L. Campredon. Baudry et Cie. Editeurs. Furman's Manual of Practical Assaying. *For reference*—Arnold's Steel Work Analysis; Hempel's Gas Analysis; Rhead and Sexton's Assaying. Notes on Assaying by Lodge.

G.—Course of Practical Metallurgy for Dentists.

A course of sixty hours upon Elementary Practical Metallurgy is given in Michaelmas Term.

Each student is required to make experiments upon the following:—

1. Physical and Chemical properties of metals.
2. Effects of impurities upon these properties.
3. Preparation of certain alloys and amalgams, to illustrate the various changes brought about by alloying metals with each other.
4. Recovery of Gold, Platinum and Silver from scrap.

5. Purification of Gold and Silver.

BOOKS RECOMMENDED.—Dental Metallurgy, E. A. Smith (Churchill). *For reference*—Dental Metallurgy by Essig (S. S. White). Mixed Metals, Hiorns (McM. & Co.)

APPARATUS.—Students will require the apparatus which they used for the practical chemistry, and certain small articles of which a list can be obtained in the Laboratory.

REGULATIONS FOR THE CHEMICAL AND METALLURGICAL LABORATORIES.

The Chemical and Metallurgical Laboratories are open daily during Term time for instruction in Experimental Chemistry, Qualitative and Quantitative Chemical Analysis, Assaying and Ore Treatment.

Students engaged in special investigations will have to provide themselves with any materials they may require which are not included among the ordinary reagents, also with the common chemicals when they are employed in large quantities.

All preparations made from materials belonging to the Laboratory become the property of the Laboratory.

No experiment of a dangerous character may be performed without the express sanction of the Professor or Demonstrators.

Each student is required to keep full notes of each day's work for the use of the Examiners.

The Laboratory hours are from 10 a.m. to 5 p.m. except on Saturdays, when the Laboratory will be closed at 1 p.m.

Every student not working with a class is required to enter the time of his arrival and departure in the attendance book.

Each student is required to provide himself with a set of apparatus necessary for the above course of Experimental Chemistry and Qualitative Analysis.

Apparatus left by a student and not removed within three months is liable to be forfeited.

The larger and more expensive pieces of apparatus are provided, for the general use of students, by the University, on the condition that all breakages have to be made good.

The Fees for instruction in the Laboratory in the case of students who have already attended the introductory practical course will be found on page 194.

GEOLOGY AND MINERALOGY.

LECTURE COURSES.

For First Year Students.

32.—PHYSIOGRAPHY.

A course of thirty lectures on the above subject, with special reference to Australian Physical Geography, will be delivered in Michaelmas Term. A similar course is given each alternate year to evening students, one lecture being given per week during each of the three Terms. Evening lectures will be given during 1906.

The lectures will treat of the Composition, Movements and Work of the Atmosphere and of the Ocean; of Evaporation and Rainfall; of Lakes, Rivers, Springs and Artesian Wells; of various Glacial Phenomena, and of the Nature, Composition and Movements of the Earth's Crust, with a short account of Ore Deposits and Meteorites.

A brief sketch will be given of the development of Animal and Plant Life from early Geological time down to the present day, and of the Geological Antiquity of Man, with outlines of the various theories about Evolution. The course will conclude with a summary of the cosmical aspects of Geology. The lectures are illustrated by means of diagrams and lantern views.

Text Book.—Physical Geography, by Professor W. M. Davis.

For Reference and Further Study.—Volcanoes, by Professor J. W. Judd; Geology of Sydney and the Blue Mountains, by the Rev. J. M. Curran; Earth Sculpture, by Professor Geikie; Agricultural Geology, by J. E. Marr; Scenery of Switzerland, by Lubbock; Inorganic Evolution, by Norman Lockyer.

For Second Year Students.

33.—GENERAL GEOLOGY.

This course will consist of a series of sixty lectures, discussing the subdivisions of the subject in the following order:—History of Geology, Material Geology, Elementary Mineralogy, Structural Geology, Stratigraphical Geology.

The lectures will occasionally be illustrated by means of a lime-light lantern. Occasional Geological Excursions will be conducted during the Lent and Trinity Terms to localities of special geological interest in the neighbourhood, and, if possible, a week to ten days will be devoted to Field Work during one of the vacations. Students will be instructed in the preparation of geological maps and sections.

Text Books.—Petrology for Students, Harker; Text Book of Mineralogy, E. S. Dana; or Mineralogy, Crystallography and Blowpipe Analysis, by Moses aad Parsons; Palæontology, Woods; Elements of Geology, Le Conte, edited by Fairchild; Physical Geography, Davis.

For Reference and Further Study.—The Student's Handbook of Physical Geology, A. J. Jukes Browne; Physical Geology, A. H. Green; Earth Sculpture, Professor Geikie; Structural and Field Geology, Professor Geikie; Principles of Geology, Lyell; Field Geology, Penning; Principles of Stratigraphical Geology, J. E. Marr; Intermediate Text Book of Geology, Lapworth; Ancient Volcanoes of Great Britain, Sir A. Geikie; La Face de la Terre, Suess, 3 vols.; Face of the Earth, Suess, Vol. I., translated by H. B. C. Sollas; Traité de Géologie, De Lapparent; Minerals in Rock Sections, Luquer, 1898.

34.—Mineralogy.

Compulsory for Students in Mining Engineering in their Third Year.

A course of about twenty lectures upon Mineralogy will be delivered during Trinity Term. These lectures are illustrated by a series of over 2000 hand specimens for close inspection, also by models of crystals and diagrams, and will include:—

I. Introduction.

*II. Crystallography.—The different systems under which crystals are grouped; the laws by which their variations and combinations are governed. The formation of crystals.

III. The principal Physical Properties of Minerals, which aid in the recognition of the various species.

IV. Classification of Minerals.

V. The Physiography or systematic description of minerals, including all the more abundant or important minerals, both those which are of geological importance and those which are of commercial value. Special reference will be made to the mode of occurrence and distribution of the minerals of Australasia.

Text Books.—Mineralogy, Crystallography and Blowpipe Analysis, Moses and Parsons, 1895; Manual of Determinative Mineralogy and Blowpipe Analysis, by G. J. Brush, thirteenth edition, 1891; Determinative Mineralogy and Blowpipe Analysis, by G. J. Brush and S. L. Penfield, fifteenth edition, 1899. *For reference and further study*—Genesis of Ore Deposits, Posepny, etc., reprinted from Trans. Amer. Inst. Mining Engineers; Minerals of New South

* This consists of combined lectures and demonstrations given during Lent Term. For further particulars see "Practical Courses."

Wales, A. Liversidge, M.A., LL.D., F.R.S.; The Mineral Resources of New South Wales, by E. F. Pittman, Assoc. R.S.M.; Ore Deposits of the United States and Canada, Kemp.

35.—For Third Year Students.

A—Stratigraphical Geology and Australian Geology.

This course will consist of about twenty lectures, delivered during Lent Term, dealing with the principles of Stratigraphical Geology, with the Geology of the Australian Continent, and with the physical features of the ocean and islands surrounding it.

For Reference.—Physical Geography, Davis; Geology of Queensland, Jack and Etheridge; Physical Geography and Geology of Victoria, R. A. F. Murray; Geography of Victoria, by Professor Gregory; Rothpletz, Geotektonische Probleme; Praktische Geologie, Keilhack; Suess, Das Antlitz der Erde; Leçons de Géographie Physique, De Lapparent; Elements of Geology, Le Conte, new edition by Fairchild; Geology, Chamberlin and Salisbury, Vols. I., II. and III.

B—Palæontology.

This course will consist of sixty lectures, to be delivered during the Lent, Trinity and Michaelmas Terms. The principal classes of the *Invertebrata* found in the fossil state will be considered, the lectures being illustrated with numerous specimens and diagrams. Special reference will be made throughout to the Palæontology of Australia, and incidentally to its Palæophytology.

Text Books.—Grundzüge der Palæontologie, Zittel (or translation of preceding by Eastman); Manual of Palæontology, Nicholson.

C.—Mineralogy and Petrology.

The course consists of about 60 lectures divided as follows:—About 20 lectures on Crystallography during part of Lent Term, in which will be discussed—Angular Distribution of Crystal Faces, Symmetry, the Various Systems of Notation, the Relations of Zones, Methods of Projection and Crystal Drawing, Apparatus for Goniometry, Details of the Systems, Theories of Crystal Structure, etc. The lectures will be delivered three times a week.

Text Book.—Crystallography, Lewis.

For Reference — Crystallography, Story-Maskelyne; Physikalische Krystallographie, Groth.

About 20 lectures during Trinity Term on Optical, Physical and Chemical Mineralogy, including Preliminary Optics, Trans-

mission of Light in Crystals, Refractive Indices, Double Refraction, Optic Axes, Dispersion, Optical Indicatrix, Relation between Physical Properties and Crystalline Form, Classification of Minerals, Synthesis of Minerals, etc. Three or four lectures will be devoted to the Theory of the Microscope.

Text Books.—Rosenbusch-Iddings, Microscopical Physiography of Rock-making Minerals, Wiley & Sons; Dana, E. S., Text Book of Mineralogy, Wiley & Sons.

About 20 lectures during Michaelmas Term on Petrology. Composition, Habit, Origin and Classification of Igneous Rocks; Mechanics of Igneous Intrusion; Synthesis of Rocks; Petrology of Sedimentary Rocks; Metamorphism; Relation of Rocks to Ore Deposits.

Text Book.—Harker, A., Petrology for Students.

For Honours additional lectures may be delivered, and special examinations may be set in one or more divisions of the subject.

Students must read the current Geological and Mineralogical Magazines, and must, unless specially exempted, do at least three weeks work in the field during their course.

Books for Reference.—The Microscope, Carpenter, edited by Dallinger, 1901; The Microscope, Naegeli and Schwendener, translated by Crisp and Mayall; Light, Lewis Wright; The Optical Indicatrix, Fletcher; Theory of Light, Preston; Physikalische Krystallographie, Groth; Crystallographie Physique, Soret; Elemente der Gesteinslehre, Rosenbusch; Mikroskopische Physiographie der Mineralien und Gesteine, Vols. I. and II., Rosenbusch; Lehrbuch der Petrographie, Zirkel; Quantitative Classification of Igneous Rocks, Cross, Iddings, Pirrson and Washington; British Petrography, Teall.

Students in their Third Year Geology Courses must take either A and B of 35, or A and C of 35. They are recommended not to attempt A, B and C during the same year.

PRACTICAL COURSES.

36.—For Second Year Students.

LENT TERM.—(*a*) Sixteen demonstrations on the construction of Geological Maps and Sections. This course will be illustrated by means of models and by numerous field excursions. Four lectures and demonstrations on Elementary Crystallography.

TRINITY TERM.—(*b*) Sixteen demonstrations on Blowpipe Analysis and Determinative Mineralogy. Four lectures and demonstrations on Elementary Optical Mineralogy.

MICHAELMAS TERM.—(*c*) Twenty demonstrations on Microscopical Petrology of igneous rocks.

Each student will be required to prepare during the year and to describe three thin sections of rocks from specimens collected by himself.

During the August-September vacation, students of all Faculties usually go into camp for a week or ten days for Field Work. Excursions to places of interest near Sydney are taken on Saturdays as opportunity offers.

Students are expected to provide themselves with a few small pieces of apparatus for the practical courses, most of which can be purchased at the Geological Department. The cost is approximately as follows for the different courses:—(*a*), 2s.; (*b*), 15s.; (*c*), a fee of £1 10s. for use of petrological microscopes, unless students provide their own microscopes of a suitable pattern.

37.—For Third Year Students.

A—GEOLOGY.

Six demonstrations of two hours each on the Construction and Interpretation of Geological Maps and Sections will be given during the Lent Term, and outdoor exercises in field mapping will be given during August-September vacation, and at such other times as are available.

B—PALÆONTOLOGY.

A course of demonstrations in illustration of the lectures on Palæontology will be given during the Lent and Trinity Terms. Time—Two hours per week.

C—MINERALOGY AND PETROLOGY.

LENT TERM.—Measurement of crystals and models with contact goniometer; measurement of crystals with various types of one-circle and two-circle reflecting goniometers; stereographic and gnomonic projection; drawing and determination of crystal elements.

TRINITY TERM.—Optical and physical measurement of crystals; refractive index; double refraction; optic orientation; optic axial angle, dispersion, hardness, electrical and magnetic properties, etc.

MICHAELMAS TERM.—A systematic course on practical petrology.

Students for Pass must spend at least six hours a week in practical work in the geological laboratory, for Honours at least twelve hours a week.

Each student must make at least one complete chemical analysis of a silicate rock during the year.

Text Books (in addition to those mentioned under 35c).—Moses and Parsons, Mineralogy Crystallography and Blowpipe Analysis, Van Nostrand Company. Endlich, Manual of Qualitative Blowpipe Analysis, Scientific Publishing Co. Behrens, Micro-Chemical Analysis, Macmillan & Co. Washington H. S. Textbook of Rock Analysis, Van Nostrand Company.

BIOLOGY.*†

38.—ZOOLOGY.

A course of fifty lectures, illustrated by specimens and diagrams, and supplemented by occasional demonstrations.

I. Introduction to Biology. Main divisions of the science.

II. General structure and physiology of animals. *Amæba.* The cell: its structure and multiplication. The ovum and the sperm. Maturation and impregnation. Segmentation. Histology of animals. The various systems of organs, and their principal functions. Reproduction, asexual and sexual. Symmetry.

III. General account of the following phyla with descriptions of representative examples: Protozoa, Porifera, Cœlenterata, Platodes, Nemathelminthes, Echinodermata, Annulata, Arthropoda, Mollusca, Chordata.

39.—BOTANY.

A course of about thirty lectures.

I. General structure and physiology of plants. Unicellular and multicellular plants. The vegetable cell and its principal modifications. Systems of tissues. Histology of plants. Organs of plants.

II. General account of the following phyla of plants with descriptions of illustrative examples: Thallophyta, Bryophyta, Pteridophyta, Spermaphyta.

III. Physiology of higher plants. Nutrition. Growth. Sources and transformations of energy. Reproduction.

* A detailed syllabus of the various courses is to be had from the Registrar.
† See Regulation in reference to Microscopes, page 201.

40-1.—Zoology and Comparative Anatomy.
Advanced Courses.

Two advanced courses, one on the Morphology and Embryology of the Invertebrata, with laboratory work,* for Science students of the Second Year; the other on the Morphology and Embryology of the Vertebrata, with laboratory work, for Science students of the Third Year.

42.—Botany—Advanced Course.

A short course on the Physiology of Plants, with practical work, for Science students of the Second Year.

43.—Practical Botany.

A course of practical work on the Morphology of Plants.

The following are studied:—*Protococcus*, *Torula*, *Spirogyra*, *Penicillium*, *Aspergillus* or *Mucor*, *Agaricus*, *Bacterium*, *Desmids*, *Diatoms*, *Œdogonium*, *Vaucheria*, *Hormoseira*, *Marchantia* or *Polytrichum*, *Pteris*, *Pinus*, *Ulmus*, *Zea*, the flowers of various Angiosperms.

44.—Practical Zoology—Elementary Course.

An elementary course for Medical and Science students of the First Year.

The following animals are studied:—*Paramœcium*, *Vorticella*, *Obelia*, *Nereis*, *Asterina*, *Helix*, *Palinurus*, *Trygonoptera*, *Columba*, *Lepus*.

Students of Medicine and Science of the First Year take 38, 39, 43 and 44. Students of Science of the Second Year take 40 and 42; Third Year 41. Nos. 39, 42 and 43, or Nos. 38 and 44, constitute the Biology for Arts students of the Second and Third Years. Pharmacy students attend No. 39.

Books Recommended:

For First Year Students.

Zoology.—Thompson's "Outlines of Zoology" or Parker and Haswell's "Manual of Zoology." Reference should also be made to the larger works recommended below for the use of Second and Third Year students. For some parts of the Practical Zoology it will be useful to refer to Marshall and Hurst's "Practical Zoology" and T. J. and W. N. Parker's "Practical Zoology."

Botany.—Vines' "Elementary Botany," or Mudge's "Botany." For reference, Strasburger's "Text-book of Botany," or Campbell's "University Text-Book of Botany." For the Practical Botany, Bower's "Practical Botany for Beginners."

* See Regulation in reference to Microscopes, page 201.

For Second Year Students.

ZOOLOGY.—Parker and Haswell's "Text-book of Zoology," Vol. I., or Sedgwick's "Text-book of Zoology," Vol. I. For reference, Korschelt and Heider's "Text-book of the Embryology of Invertebrates"; Ray Lankester's "Treatise on Zoology"; Wilson's "The Cell in Development, and Inheritance" (2nd ed.).

BOTANY.—Vines' "Text-book of Botany." Darwin and Acton's "Practical Physiology of Plants" (2nd ed.).

For Third Year Students.

Parker and Haswell's Text-book, Vol. II. Marshall's Embryology. Wallace's "Darwinism." Lloyd Morgan's "Animal Life and Intelligence."

BIOLOGICAL LABORATORIES AND MUSEUM.

The Laboratories, together with the Departmental Museum, are open to students of Biology daily from 9 a.m. to 5 p.m., excepting on Saturdays, when they are closed at 1 p.m., and Sundays and Public Holidays, when they are not opened. The practical teaching is confined to certain stated times, but students are at liberty to work in the Laboratory or the Museum at any time within the limits specified. The accommodation for research work is at present limited, but, so far as practicable, every encouragement and assistance are given to graduates and others desiring to pursue lines of original investigation on biological subjects.

HUMAN ANATOMY.

45.—DESCRIPTIVE ANATOMY.

A.—For Medical Students of First Year.

Daily during Michaelmas Term.

Introduction. History of the Science of Anatomy. Various aspects of anatomical study. Methods of study. Nomenclature and Terminology. General characteristics of bodily structure. Preliminary account of human ontogeny. Establishment of rudiments of various bodily systems and organs.

B.—For Medical Students of Second Year.

Daily during Lent and Trinity Terms.

Account of the Development and Descriptive Anatomy of Osseous, Articular, Muscular, Vascular, Splanchnic and Integumentary systems.

The lectures are illustrated by anatomical preparations, both naked-eye and microscopical, and by dissections, lantern-slides and diagrams.

Text Books.—Text Book of Anatomy, edited by D. J. Cunningham. (Morris' Treatise on Anatomy, 3rd Ed., or Gray's Anatomy, 15th Ed., may, if desired, be adopted in place of Cunningham's Text Book.) The Development of the Human Body, by J. P. McMurrich; or, Human Embryology, by Arthur Keith (2nd ed.), may be used in the study of the developmental aspect of the science. If a special atlas of illustrations be desired, the Hand Atlas of Human Anatomy, W. Spalteholz, translated by L. F. Barker, will be found most suitable.

For Reference.—Quain's Anatomy, 10th Ed.; various sections of Schaefer's Physiology; Minot's Human Embryology; The Cell, by E. B. Wilson; Atlas of Central Nervous System. by Flatau and Jacobson.

46.—Dental Anatomy.

A course of ten lectures upon the Anatomy of the teeth, including their structure and development, will be given during Trinity Term to First Year Students in Dentistry.

For Reference.—Tomes' Dental Anatomy.

47.—Regional Anatomy.

For Medical Students of the Third Year.

Daily during Lent and Trinity Terms.

The special anatomy of the human subject is described topographically, and the descriptions are systematically illustrated by demonstrations upon the dead body. This course includes a series of demonstrations on Neurology.

48.—Practical Anatomy or Dissections.

The dissecting rooms are open daily, to members of the Practical Class only, during all the three terms, from 9 a.m. to 5 p.m., under the supervision of the Professor and Demonstrator. Parts for dissection will be allotted by the Demonstrator. During each of the five terms in which attendance on Practical Anatomy is obligatory in accordance with the University By-laws, every student must be actually engaged in dissection, so far as the allotment of parts renders this at any time possible.

Not less than three hours should be devoted daily to actual work in the dissecting room, where alone a practical familiarity with the macroscopical details of human structure can be acquired.

Credit for having dissected a part will be given only where diligence and attention to the work, and a fair degree of proficiency in actual dissection, have been exhibited. It is necessary

to have dissected each "part," at least once, before admission to the Third Year Examination. Prosectors for the Anatomy Classes are selected from among the best dissectors.

Text Book for Practical Work.—Cunningham's Manual of Practical Anatomy, 3rd edition.

ANATOMICAL LABORATORY.

The Professor will give all possible assistance to any advanced student or other competent person who may desire to pursue some special study or enter upon some original investigation in Anatomy; provided that, if not a member of the University, the applicant shall make special arrangements with the Registrar.

49.—PHYSIOLOGY—JUNIOR AND SENIOR.

These classes include a description of the microscopical anatomy of the tissues and organs of the body, a special account of the Physics and Chemistry of the body, and of the functions of all its various parts.

The course is fully illustrated by experiments, diagrams, models, &c., &c.

50.—PRACTICAL PHYSIOLOGY.

Conducted conjointly by the Professor and his Assistants. The work of this class includes:—

I. PRACTICAL HISTOLOGY.*—In which each student prepares, examines, and preserves for himself specimens of the tissues and organs of the body. The student is shown all the more important processes in histological work, and, where practicable, performs them himself.

II. EXPERIMENTAL PHYSIOLOGY.—In this class each student performs for himself, and obtains graphic records of, the simpler experiments dealing with the physiology of muscle and nerve, the circulation and respiration. He also obtains practical training in the use of those physiological instruments employed in clinical work, *e.g.*, ophthalmoscope, laryngoscope, perimeter, sphygmograph, &c.

III. PRACTICAL CHEMICAL PHYSIOLOGY.—In which each student makes an examination of the principal

* See Regulation in reference to Microscopes, page 201.

proteids, carbohydrates and fats contained in animals and plants. He then examines chemically blood, muscle, milk, bile, saliva, and gastric and pancreatic juices, and performs experiments in artificial digestion with the three latter. After this he proceeds with the qualitative and quantitative (gravimetric and volumetric) analysis of normal and abnormal urine. Special attention is drawn to the clinical bearing of the work.

In these courses the use of the apparatus (except microscope) and of the reagents is *gratis*.

51.—Special Course for Science and Arts Students.

In addition to the above, a Special Course of Instruction will be held for Science and Arts students (at times to be arranged) in which demonstrations will be given in Elementary Physiological Anatomy.

The course will be illustrated by means of dissections models, diagrams, microscopical preparations, &c., &c., &c.

Text Books for Physiology.—Foster's Text Book of Physiology; Schäfer's Text Book of Physiology; Halliburton's Handbook of Physiology; Waller's Human Physiology; G. N. Stewart's Manual of Physiology; Starling's Elements of Human Physiology; Halliburton's Essentials of Chemical Physiology; Brodie's Essentials of Experimental Physiology; Quain's Anatomy, or Schäfer's Essentials of Histology and Directions for Class Work in Practical Physiology.

THE PHYSIOLOGICAL LABORATORY.

The Physiological Laboratory (including the special laboratories for Histology, Experimental Physiology, Physiological Chemistry, and the workshop) is open daily from 10 a.m. to 5 p.m.; Saturdays, 10 a.m. to 1 p.m.

Junior students are admitted at stated times, and receive instruction from the Demonstrator. Senior students can use the laboratory at any time during Term, and most vacations, by arrangement with the Professor, and are encouraged in the prosecution of original investigations under his direction, and that of the Demonstrator.

Anyone, whether or not members of the University, wishing to undertake any original research in the laboratory, can do so by application to, and arrangement with, the Professor, who will afford suitable investigators every assistance in his power.

52.—PHARMACOLOGY.

Laboratory Class in Pharmacology.—In this class each student will examine the chemical characters of the principal groups of active substances in plants, will perform the tests for the chief alkaloids and drugs, and will carry out the main methods of separation for the common poisons, &c. The student will then proceed to the examination of the effect of the principal drugs on secretion, muscle, nerve, heart, respiratory apparatus, &c., and the properties of some of the more important therapeutic agents will be investigated in detail. The different parts of the practical work will be introduced by the necessary didactic instruction, and demonstrations of experiments not readily performed by the student will be freely shown.

53.—MATERIA MEDICA AND THERAPEUTICS.

(1) For Medical Students.

A course of 10 lectures on Posology, and 15 on Special Therapeutics, will be instituted in due course for medical students in their fifth year.

(2) For Dental Students.

A course of 20 lectures on the Materia Medica and Therapeutics of the more important substances employed by Dentists, and adapted to the special requirements of the latter, will be given during Lent Term.

Text Books.—Materia Medica for Dentists, *Gabell and Austin.*

(3) For Pharmaceutical Students.

A course of lectures on Pharmaceutical Chemistry and Pharmaceutical Botany, treating primarily of the substances officinal, and secondarily of the more important substances not officinal in the British Pharmacopœia, will be given to Pharmaceutical students. This course will consist of 50 lectures, and will be illustrated by diagrams, macroscopical and microscopical specimens, and such other means as may prove feasible.

Text Book.—Companion to the Pharmacopœia, *Squire;* Materia Medica, *Greenish.*

For Reference.—Pharmacographia, *Flückiger and Hanbury*; Extra Pharmacopœia, *Martindale and Westcott;* Pharmacopedia, *White and Humphrey.*

(The courses on Special Therapeutics and on Pharmaceutical Chemistry and Pharmaceutical Botany are optional for medical students.)

54.—PRINCIPLES AND PRACTICE OF MEDICINE.

W. Camac Wilkinson, B.A., M.D., Lond.

General observations upon Symptoms, objective and subjective.—Variations of Temperature and of Pulse, and state of Tongue, Skin and Digestive Functions in Disease. Infection and Intoxication. Ptomaine Poisoning. Botulismus. Infection and Infectious Diseases.

A. Septicæmia. Sapræmia. Pyæmia. Erysipelas. Septic Endocarditis. Acute Rheumatism. Furunculosis. Carbuncle. Epidemic Cerebro-spinal Meningitis. Influenza. Diphtheria. Tetanus. Typhoid Fever. Malta Fever. Relapsing Fever. Cholera. Plague. Tuberculosis. Leprosy. Actinomycosis and Madura Foot. Syphilis. Glanders. Anthrax. Malaria. Hæmoglobinuric Fever. Measles. Scarlet Fever. Typhus. Smallpox. Vaccinia. Chickenpox. Mumps. Whooping Cough. Dengue. Yellow Fever. Tropical Diseases. Rabies.

B. Parasitic Diseases. Hydatids. Intestinal and other Worms. General Diseases.

C. Diseases of Organs and Systems.

Text Books.—Osler's Medicine; Taylor's Medicine.

55.—PRINCIPLES AND PRACTICE OF SURGERY

Dr. A. MacCormick.

Introduction—Principles and Practice.

1. Healthy Nutrition.
2. Aberrations from Healthy Nutrition.

a. Hypertrophy. *b.* Atrophy. *c.* Inflammation. *d.* Traumatism. *e.* Surgical Diseases. *f.* Regional Surgery,—injuries and diseases peculiar to parts of the body.

Text Books Recommended.—Walsham's Surgery; Rose and Carless' Manual; Cheyne and Burchard's Manual; Jacobson's Operations of Surgery; Treves' Operations; Waring's Manual of Operative Surgery.

56.—MIDWIFERY.

Sir James Graham, M.A., M.D.

Anatomy and Physiology of the several organs and structures connected with Ovulation, Gestation, Parturition, &c.

Gestation, its Signs, Symptoms, Duration and Abnormalities.
The Phenomena of Natural and Complicated Labour.
The Induction of Premature Labour and Obstetric Operations.
The Management of the Puerperal State.

Text Books.—Playfair's Manual of Midwifery; The Science and Art of Obstetrics, Parvin; Galabin's Manual of Midwifery; Herman's Difficult Labour.

57.—DISEASES OF WOMEN.

Mr. J. Foreman, M.R.C.S.

Introductory.
Anatomy of the Female Pelvic Organs.
Diseases of the Vagina.
Diseases of the Uterus and Fallopian Tubes.
Diseases of the Ovaries.
Pelvic Tumours.

BOOKS RECOMMENDED.—Galabin's Students' Guide to Diseases of Women; McNaughton-Jones' Manual of Gynæcology (6th edition), Hart and Barbour.

58.—PATHOLOGY.

Professor D. A. Welsh.

For the study of Pathology the following courses are provided:—

I. A course of Lectures and Demonstrations in GENERAL PATHOLOGY, or the study of the general ætiology of disease and of morbid processes in general, including—

1. Retrograde tissue changes (Atrophy, Degeneration, Necrosis).
2. Progressive tissue reactions and formative processes (Inflammation, Repair, Hypertrophy).
3. Tumour-growth (Neoplasia).
4. General circulatory derangements (Arterial and Venous Hyperæmia, Dropsy, Embolism, Thrombosis).
5. Invasion by Animal Parasites.
6. Infection, Intoxication, Immunity, including a systematic account of the more important Pathogenic Bacteria.

II. A course of PRACTICAL PATHOLOGY.*—The work of the Practical Class consists of—

1. Practical training in some elementary histological methods.
2. A systematic study under the microscope and with the naked eye of selected pathological lesions illustrative of typical morbid processes and conditions described under General and Special Pathology.

III. A course of Lectures and Demonstrations on SPECIAL PATHOLOGY, or a systematic study of the more important Diseases, with special reference to the organs and tissues affected, including the Blood and certain correlated tissues (Bone Marrow, Lymphoid Tissue, etc.), various Glandular Organs, and the structures of the Lymphatic, Circulatory, Respiratory, Alimentary, Urinary, Nervous, and Osseous Systems.

IV. A course of SPECIAL BACTERIOLOGY for Senior students of and Graduates in Medicine. This class is essentially practical. Its object is the study of the chief Pathogenic Bacteria, with special reference to Clinical Diagnosis. It consists, therefore, of laboratory instruction and demonstrations in

(1) General bacteriological technique, including methods of sterilisation, preparation of culture media, methods of isolation and of cultivation, methods of staining, separation of bacterial products, inoculation, etc.

(2) The systematic examination of the more important bacteria concerned in disease, including their distinctive characters under the microscope and in cultivation, their localisation in the tissues, their mode of action, etc. Some of the non-pathogenic bacteria may also be studied.

V. A short course of PRACTICAL HÆMATOLOGY is associated with the course of Special Bacteriology, and may be attended without extra fee. It consists of practical instruction in methods of preparation, fixation, staining, and examination of blood films with special reference to Clinical work.

N.B.—Microscopes for practical work in Bacteriology and Hæmatology require a suitable condenser, and a $\frac{1}{12}$-inch

* See Regulation in reference to Microscopes on page 201.

homogeneous immersion objective. A triple dust-proof nose-piece will be found a great convenience. See regulations in reference to microscopes on pages 201-2.

VI. Clinical Pathology and Post-mortem Examinations.—Students are urgently recommended to avail themselves of every opportunity that may be given in the pathological laboratory and theatre of the Royal Prince Alfred Hospital for the study of morbid anatomy, and the relation of clinical phenomena to morbid processes.

VII. Post-Graduate Courses.—Graduates and Licentiates in Medicine may, on application to the Professor, attend the special laboratory courses on Bacteriology and Hæmatology along with senior students. If, however, a sufficient number should desire it, a separate class for graduates and licentiates alone may be held.

Special post-graduate courses on other subjects will, from time to time, be announced.

Original Research.—Original research in the subjects of Pathology and Bacteriology will be encouraged so far as the equipment and accommodation in the Laboratory will permit.

Text Books.—For General Pathology, *Greenfield* and *Lyon's* "Chapters in Pathology," or *Coats's* "Manual of Pathology," or *Sidney Martin's* "Manual of General Pathology." For Bacteriology, *Muir and Ritchie's* "Manual of Bacteriology." For Hæmatology, *Da Costa's* "Clinical Hæmatology," or *Cole's* "Diseases of the Blood." For Special Pathology, *Manson's* "Tropical Diseases," and either *Osler's* "Principles and Practice of Medicine," or *Gibson's* "Text Book of Medicine," or *Clifford Allbutt's* "System of Medicine." The text-books by *Thoma* (translated by Bruce), by *Hamilton*, by *Woodhead*, and by *Lazarus-Barlow*, are also worthy of consultation.

59.—For Students of Dentistry.

Students of Dentistry are required to attend the following courses:—

(1.) General Pathology (including Bacteriology) as prescribed for students of medicine.

(2.) Practical Pathology, as prescribed for students of medicine, in so far as it is illustrative of General Pathology, with, in addition, a short course on the special pathology and bacteriology of the mouth and teeth.

Text Book Prescribed.—*Greenfield and Lyon's* "Chapters in Pathology;" *Goadby's* "Mycology of the Mouth."

60.—MEDICAL JURISPRUDENCE.

Mr. Sydney Jamieson, B.A., M.B., Ch.M.

Aims, objects and scope of the subject. Legal criminal procedure. Medical evidence. Identification in the living and dead. Death in its medico-legal relations. The examination of the dead body. The signs of death. Medico-legal forms of death.—(1) Drowning, (2) Suffocation, (3) Hanging, Strangulation and Throttling, (4) Lightning and Electricity, (5) Burns and Scalds, (6) Criminal Neglect and Starvation, (7) Cold and Exposure, (8) Heat Apoplexy, (9) Mortal Wounds. Differential diagnosis of states of insensibility. Wounds in their medico-legal relations. Examination of blood and other stains. Legal relations of sexual incidents. Signs of pregnancy and delivery. Criminal abortion. Infanticide. Legal relation of insane states. Toxicology.

61.—PUBLIC HEALTH.

Mr. W. G. Armstrong, B.A., M.B., Ch.M.

PUBLIC HEALTH.—Meteorology—Temperature, winds, humidity, rainfall, atmospheric pressure, climate. Air—Composition, impurities, ventilation, amount required, natural and artificial ventilation, examination of air. Soil—Ground water, ground air, organic matter in soil, classification of soils. Water—Quantity and supply, quality, impurities, purification, examination of water supplies. Food—Classification of foods, dietaries, preservation of foods, unsound food, diseases caused by food. Sanitary engineering—Dwellings, sanitary defects, disposal of refuse, wet and dry methods, sewers, sewage disposal. Disease—Infectious diseases, history of epidemics, means of prophylaxis, occupational diseases. Vital statistics. The law of public health—Notification, preventive measures, nuisances, insanitary habitations, protection of food supplies.

62.—PSYCHOLOGICAL MEDICINE.

Dr. Chisholm Ross.

This course comprises:—

I. An account of the Nature, Causes, Classification, Social and Medico-Legal Relations of Insanity.

II. An account of the various forms of Mental Disease or Disorder; their Clinical History, Diagnosis, Prognosis and Treatment.

III. Practical demonstrations, at the Hospital for the Insane, of the various types of Mental Disease or Disorder.

63.—OPHTHALMIC MEDICINE AND SURGERY.

Mr. F. Antill Pockley, M.B., Ch.M.

Diseases and Injuries of the Conjunctiva, Cornea, Sclerotic, Iris and Ciliary Body, and Crystalline lens.

Glaucoma.

Refraction and Accommodation—Emmetropia, Am etropia Hypermetropia, Myopia, Astigmatism: Asthenopia.

Examination of the Eye, Ophthalmoscopy.

Affections of the Vitreous Humour, of Optic Nerve, Retina, and Choroid.

Affections of Sight unaccompanied by any definite intra-ocular signs:—Amblyopia and Amaurosis, Colour Blindness, &c.

Perimetry:—Defects in Visual Field, Hemianopsia, &c.

Affections of the Ocular Muscles: Paralysis, Strabismus, &c.

Diseases of the Eyelids and Lachrymal Apparatus.

Operations.

BOOKS RECOMMENDED.—*Text Books*—Handbook of Diseases of the Eye *Swanzy;* Diseases of the Eye, *Nettleship;* Diseases of the Eye, *Berry.*

For Reference.—System of Diseases of the Eye, *Norris and Oliver.*

64.—DESCRIPTIVE GEOMETRY.

Mr. S. H. Barraclough.

The course consists of forty lectures on the elements of Descriptive Geometry during Lent and Trinity Terms for all students in Engineering of the First Year, and a short course of advanced lectures in Michaelmas Term.

During Lent and Trinity Terms students are required to complete, under the Demonstrator's supervision, a series of practical exercises and problems to illustrate the work dealt with in the lectures:—

Scales. Constructions relating to straight lines, polygons, circles and circular arcs, conic sections, cycloidal curves, involutes and spirals.

Orthographic projection. Representation of points, lines and planes by their projections and traces. Problems on lines and

planes. The determination of the projections of simple solids, under given conditions of position. The interpenetration of given solids. Generation and classification of surfaces. Development of surfaces. Tangent planes. The projection of shadows. Principles of isometric projection. Principles of perspective projection. Spherical projections.

A short course on "Graphics" is also included here for the present.

Books Recommended for Reference.—Descriptive Geometry, *A. E. Church*; Descriptive Geometry, *J. Woolley*; Practical Plane and Solid Geometry (Advanced), *Harrison & Baxandall*; Graphics, *R. H. Smith*; Vectors and Rotors, *Henrici & Turner*; Elements of Projective Geometry, *Cremona*; Projective Geometry and its application, *Emch*.

65.—MECHANICAL ENGINEERING.

Mr. S. H.. Barraclough.

The instruction in Mechanical Engineering is divided into three parts, of which I. is taken by all students of the Second Year; II. by Mechanical and Electrical Engineering students of the Third Year, and (in part) by Mining students of the Third Year; while III. is taken by Mechanical and Electrical students of the Fourth Year. For the instruction in Engine and Machine Design see § 69.

Mechanical Engineering I.

The course consists of 70 lectures and 30 demonstrations in the Second Year.

(*a*) Engineering mechanics. The application of the principles of dynamics to various practical problems. Equilibrium of machine parts. Work. Power. The indicator card. Friction. Efficiency and mechanical advantage of machines. Transmission and absorption dynamometers. Moments of inertia. Fly-wheel action. Reciprocating motion. Acceleration effects. Hydrostatic problems. Simple hydraulic machines.

(*b*) Kinematics of machines. The science of mechanism. Constrainment of plane motion. Virtual motion in mechanisms. Relative velocities in mechanisms. Diagrams of velocity and acceleration. Spur-wheel trains. Screw gears. Profiles for wheel-teeth. Epicyclic gearing. Cam trains. Straight line motions. Inversion of mechanisms. Analysis of important mechanisms. Systems of classification. Applications to machine tools. "The art" of invention.

(*c*) History of the development of heat motors, and the elements of thermo-dynamics. Sources of energy. Fuel. Combustion. Properties of steam. The operation of steam and gas engines. Reversed heat motors.

BOOKS RECOMMENDED FOR REFERENCE.—Applied Mechanics (*Perry*); Mechanics of Engineering (*Church*); Kinematics of Machines (*Durley*); Mechanics of Machinery (*Kennedy*); History of the Steam Engine (*Thurston*); Steam Engine (*Ewing*); Tables of the Properties of Steam (*Barraclough*); Mechanism (*Dunkerly*); Mechanical Engineering (*Lineham*).

MECHANICAL ENGINEERING II.

100 lectures and 40 demonstrations during Lent and Trinity Terms of the Third Year.

(*a*) Advanced theory of heat engines. Conditions affecting economy. The cyclical flow of heat in the cylinder walls of heat engines. Detailed consideration of heat losses. Standard methods of conducting engine trials. Boilers. Economisers. Superheaters. Condensers. Cooling towers. Auxiliaries. Injectors. Refrigerating machines and processes. Use of compressed air. Steam turbines. Modern gas engines. Use of cheap gas.

(*b*) Theory of machines. Various machine problems. Friction of machines. Lubrication. Dynamics of the steam engine. Crank effort diagrams. Fly-wheels. Governors. Inertia of reciprocating parts. Balancing of machines. "Vibration" troubles.

(*c*) Hydraulic machinery. Reciprocating pumps and pressure engines. Impulse and reaction turbines. Centrifugal pumps. Elevators. Winding machinery.

All students attending this course are required to write during the year an Engineering essay on subjects to be selected by them in consultation with the lecturer.

ADDITIONAL BOOKS RECOMMENDED FOR REFERENCE.—The Entropy Diagram and its Applications (*Boulvin*); Steam Engine (*Perry*); Manual of the Steam Engine (*Thurston*); Steam Engineering (*Pullen*); Steam Engine Problem (*Barraclough*); Experimental Engineering (*Carpenter*); Balancing of Machines (*Dalby*); Hydraulics (*Bovey*); Hydraulic Motors (*Bodmer*).

MECHANICAL ENGINEERING III.

Forty lectures, with demonstrations, in the Fourth Year. This class is usually conducted as a Consulting Engineering Seminary.

Discussion of general problem of power production. Finance as a factor in engineering enterprises. Cost of power. Sources of energy. Hydraulic power stations. Power-house design and equipment (excluding all electrical detail). Engine and machine foundations. Chimneys. Smoke prevention. Liquid fuels. Choice of engines, boilers and auxiliary plant. Methods of power distribution. Care of engines, boilers and machinery. Boiler inspection. Causes of boiler explosions.

BOOKS RECOMMENDED FOR REFERENCE.—Mechanical Engineering of Power Plants (*Hutton*); Development and Transmission of Power (*Unwin*); Steam Power Plants (*Myer*). Students are expected to read the current numbers of certain of the Engineering Journals.

MECHANICAL ENGINEERING LABORATORY.

The following syllabus indicates generally the experimental work which students attending the foregoing courses of lectures on Mechanical Engineering I., II. and III. are required to carry out in the laboratory.

I. The use of various forms of slide rules and calculating instruments. Verniers, micrometer-calipers, wire gauges and standards. The planimeter. Working-up indicator cards. Measurements of friction coefficients. Efficiency and mechanical advantage of simple machines such as screw press, pulley block tackle, differential pulley and worm-wheel crab. Determination of velocity diagrams in quick return motions. Energy of fly-wheel. Moments of inertia. Measurements with rope brake, Prony brake, and fan brake. Transmission dynamometers. Calibration of pyrometers, pressure gauges and steam engine indicators. The engine indicator. Preliminary tests of steam engine. Valve setting. Tests of Pulsometer.

II. Complete engine and boiler tests. Gas and oil engine tests. Investigation of heat losses. Tests of lubricants. Determination of friction in line shafting, etc. Refrigeration and ice-making plant. Calorific value of fuels. Flue gas analysis. Tests of hydraulic motors.

In connection with Mechanical Engineering III., such opportunities as occur will be taken for conducting tests of outside power plants, and encouragement will be given to any senior students who are desirous of making special investigations.

OPERATION OF ENGINES AND MACHINERY.—Although it is not part of the regular work of the University to train students

in the management of Engines, Boilers, and Machinery, yet during the four years students spend at the Engineering School it is possible to gain much valuable experience in this direction if all the available opportunities are taken advantage of. As an assistance to students in this matter, in addition to the regular Engineering Laboratory instruction, arrangements are made during vacations, for such students as desire it, to take charge of the running of the Engines and Machinery in the Laboratory, but only for continuous periods of not less than a week together.

67.—CIVIL ENGINEERING.

Civil Engineering I.

Preliminary Course in Engineering Construction.—The location of Roads, Railways, and Pipe Lines, and the preparation of the necessary plans and sections. Earthworks, cuttings and embankments. Waterways and Culverts. Timbering. Tunnelling. Storage and other Reservoirs. Tanks, dams, water courses and conduits.

Civil Engineering II.

A. Hydraulic Engineering.—The water supply of towns, and the design and construction of the various works required in connection therewith.

Sanitary Engineering.—Various systems of sewerage, House drainage. Construction of Sewage Works. Sewage disposal. Destructors and desiccators.

Harbour Engineering.—Description and classification of the principal harbours. The design and construction of breakwaters and harbour works, docks, &c.

Rivers and Canals.—The design and construction of the various works in connection with river improvements. Ship canals, &c.

B. Railway Engineering.—The design and construction of railway works.

Permanent way. Signals. Points and crossings. Interlocking systems.

Passenger and Goods Stations.

Locomotives. Rolling stock. Brakes. Couplings and other railway appliances.

The construction of roads and streets. Paving of carriage ways.

BOOKS AND PAPERS RECOMMENDED FOR REFERENCE.—Humber's Water Supply; the Manchester Waterworks, by Bateman; Spon's Dictionary, Waring's Sewerage and Land Drainage; Sewage Disposal, by W. Santo Crimp, Stevenson's Harbours and Docks; Stevenson's Rivers and Canals; Vernon Harcourt's Civil Engineering; Vernon Harcourt's Harbours and Docks; Vernon Harcourt's Rivers and Canals: the Proceedings of the Institution of Civil Engineers, and also of the American Society of Civil Engineers: the various reports of Sir John Coode; the various reports on the Sewerage of the principal towns of Australia; Roads and Streets, by D. K. Clark; Barry's Railway Appliances; Gribble's Preliminary Surveys and Estimates; Wilcocks' Egyptian Irrigation. Buckley's Irrigation Works in India. Students are expected to read the current numbers of the various Engineering Journals.

CIVIL ENGINEERING III.

A. The calculation of stresses in braced structures for fixed and moving loads.

The design of roofs, girders, trusses and pit heads, masonry arches, retaining walls, dams, piers. Foundations and temporary works in connection with Engineering Structures.

B. Theory of long columns. Equations of slope and deflection of discontinuous and continuous beams. The deflection of bridges. Redundant structures. Swing and other movable bridges. Arched, suspension and cantilever bridges.

Design of foundations for bridge piers and abutments. Steel construction in connection with high buildings.

BOOKS RECOMMENDED FOR REFERENCE.—Engineering Construction in Iron, Steel and Timber, by Professor Warren (Longmans); Rankine's Applied Mechanics and Civil Engineering; Weyrauch on the Structure of Iron and Steel; Unwin's Testing of Materials; Johnson's Materials of Construction; Ritter on Iron Bridges; Lanza's Applied Mechanics; The Strains in Framed Structures, by Dubois; R. H. Smith's Graphics; Clarke's Graphic Statics; Burr's Stresses in Bridges and Roof Trusses; Claxton Fidler's Practical Treatise on Bridge Construction; Report of the New South Wales Railway Bridges Inquiry Commission; Johnson's Theory and Practice of Modern Framed Structures; Baker's Masonry Construction; Patton's Foundations.

CIVIL ENGINEERING LABORATORY.

Students attending Courses II. and III. in Civil Engineering are required to devote a minimum of 120 hours in the laboratory to the investigation of the properties of materials, including iron, steel, timber, cement, reinforced concrete, &c.; students attending Course III. only are required to devote a minimum of 60 hours to laboratory practice.

68.—ELECTRICAL ENGINEERING.

Electrical Engineering I.

Lectures during Lent and Trinity term only. Examination at end of Trinity term.

Design, construction, and operation of direct current dynamos and motors.

Electrical instruments. Switches and fuses. Switchboards.

Electric illumination. Arc and incandescent lamps. Street lighting.

Electric light and power wiring.

Distribution systems. Cable manufacture. Laying underground cables.

Storage batteries and their operation.

Motor driving and special applications.

Isolated electric installations.

Electrical Engineering II.

Lectures during Lent, Trinity and Michaelmas term. Examination at end of Michaelmas term.

Design of large electric generators for direct current and multiphase alternating current.

Static transformers, single and three phase. Rotating transformers.

Induction motors. Single phase motors.

The lay-out of electric power stations. Substations.

Long distance power transmission.

Electric tramways. Overhead and conduit systems. Tramcar equipments.

The lay-out of overhead equipment and feeder systems.

Electric railways. Third rail. Three phase. Single phase.

Electric heating—welding. Electrolytic and furnace work.

The drafting of specifications. Preparation of estimates.

Books of Reference.—Magnetic Induction, *Ewing;* Dynamo Electric Machinery, Continuous Current, Vol. I., Alternating Current, Vol. II., *Thompson;* The Dynamo, *Hawkins & Wallis;* Alternate Current Transformer, *Fleming;* Alternating Currents, *Hay;* Elements of Alternating Currents, *Franklin & Williamson;* Standard Polyphase Apparatus, *Oudin;* Induction and Continuous Current Motors, *Hobart;* Central Electric Stations, *Wordingham;* Electric Traction, *Rider;* Elec-

tricity Control, *Andrews;* Secondary Batteries, *Wade;* Seconday Battery, Engineering, *Lyndon;* Starters and Regulators, *Krause;* Electric Furnacers. *Moissan;* Electrical Measuring Instruments, *Parr;* Electrical Engineering Testing, *Parr;* Testing of Continuous Current Machines, *Kinzbrunner;* Electric Traction Pocket Book, *Dawson;* Electric Railway Economics, *Gotshall;* Electrical Pocket Book, *Foster;* Electrical Problems, *Hooper;* Examples in Electrical Engineering, *Joyce;* Electric and Magnetic Calculations, *Atkinson;* Electric and Magnetic Circuits, *Crapper;* Modern Electric Practice, 6 vols.; Conductors and Electric Distribution, *Perrine.*

Students will follow a systematic course of numerical problems and examples illustrating the foregoing lectures.

Instruction will be given in electrical design, the working drawings of which will be carried out in the drawing office.

Electrical Engineering Laboratory.

Students in Electrical Engineering Course II. will attend a systematic series of demonstrations in laboratory work. The investigation of commercial electric measuring instruments, meters, incandescent and arc lamps, lightning arresters, insulators, etc. Tests of direct current, single, two, and three phase machines; single and three phase alternators, and induction motors. Separation of losses; characteristic curves; temperature rise at various loads; voltage drop. Efficiency tests and investigation of the performance of combined plants for the generation and utilisation of electric energy. Testing of transformers and work with high tension alternating currents. Synchronising, effects of capacity and self-induction, etc. Experiments will also be carried out with the oscillograph.

Visits will be made each week to various electrical works of interest in and around Sydney.

As far as possible, arrangemeuts will be made for Electrical Engineering students to spend their vacations in central stations or with firms engaged in electrical work.

Students in Electrical Engineering Course I. will be given instruction in electric wiring and installation work generally. Also in the inspection and testing of actual installations.

69.—ENGINEERING DRAWING AND DESIGN.

Lecture Courses.—First Year.—Fundamental principles. Nature and uses of materials for machine parts. Bolts, studs. Connection of parts by pins, keys, and cotters. Pipes and

flanges. Shafts and couplings. Plummer blocks. Hangers. Pulleys. Connecting rods. Pistons. Stuffing boxes and glands. Valves. Riveted joints.

SECOND YEAR.—Detailed design of a simple engine and boiler. Cylinders. Valve gears. Reversing gears. Pumps. Design of boilers to Board of Trade and Lloyd's requirements. Riveting. Staying. Methods of manufacture and influence on design. Elementary costs.

THIRD YEAR.—Detailed design of structures: Preparation of specifications, estimates, etc.

FOURTH YEAR.—Mechanical and Electrical: Advanced course in the design of machinery and prime movers, layouts for piping, etc.

Mining: Detailed design of mining plant. Layout of machinery, boilers, piping, etc.

DRAWING OFFICE PRACTICE.

FIRST YEAR.—Lettering and printing. Drawing of details from working drawings. Sketching of machine parts. Preparation of tracings.

SECOND YEAR.—Detailed drawings of simple engine and boiler, hoisting engine, crane, or similar machine.

THIRD YEAR.—Detailed drawings of a structure, applicable to the course taken by the student. Quantities, specification, and estimate for same.

FOURTH YEAR.—Detailed drawings, specifications, etc., on work of the nature given in the above lecture courses.

70.—SURVEYING.

The course consists of lectures and field demonstrations. Students are also required to make surveys for themselves, and to undertake the whole of the necessary computations, to prepare plans and drawings, etc., and to make and reduce astronomical observations for time, latitude, meridian, etc.

The lectures treat of the history and development of the art of land, engineering, mining, hydrographical and hydraulic, and geodetical surveying, and astronomical operations in connection therewith; and discuss important modern methods.

The general mathematical theory, including the applications of the theory of probability (least squares, etc.), is treated in the light of the physical and economic limitations to which practical survey operations are subject. The mathematical theory of surveying instruments and of their use, the practical elimination of avoidable error, the general scheme of numerical computation, and the application of graphic methods in regard thereto, together with typical problems which present themselves in survey, are among the subjects considered in the lectures.

Cartography is discussed in regard to its general conventions, the theory of plan drawing and map construction. The important projections in relation thereto are outlined. The special features of hydrographic surveying, including the observation and reduction of tidal phenomena, hydraulic surveying, the general mathematical theory of the flow of water under different circumstances, constitute part of the ordinary course for all students.

In mining surveying, the special characteristics, instruments, and problems that arise in connection with survey operations in various mines, and with the determination of the strike, dip, and intersection of geological strata, the direction of bores, etc., are the subject matter of the lectures.

Part of the course is common to all students.

[NOTE.—Should a sufficient number of applications be received for other branches of surveying, such as military, quantity, and agricultural surveying, the magnetic survey of a territory, higher geodesy, and higher geodetical astronomy, special arrangements will be made by the lecturer to give a course thereon.]

BOOKS RECOMMENDED FOR REFERENCE.—Johnson's Theory and Practice of Surveying; Bauernfeind's Elemente der Vermessungskunde; Jordan's Handbuch der Vermessungskunde; Wilson's Topographic Surveying; Ganguillet's and Kutter's Flow of Water in Rivers and Channels; Merriman's Hydraulics; Bovey's Hydraulics; Robinson's Marine Surveying; Hawkins' Astronomy (Elementary); Chauvenet's Spherical and Practical Astronomy (Advanced); Doolittle's Astronomy; Clarke's Geodesy; Gore's Elements of Geodesy; Merriman's Least Squares; Wright's Adjustment of Observations; Brough's Mine Surveying; Lupton's Mine Surveying; Zeitschrift für Vermessungswesen.

71.—ARCHITECTURE.

HISTORY OF ARCHITECTURE, illustrated by photographs and drawings; and BUILDING CONSTRUCTION, illustrated by diagrams and drawings, and samples of materials.

History of Architecture.—The historical evolution of design in buildings from the earliest times to the present day, embracing Egyptian, Assyrian, Grecian, Roman, Romanesque, Byzantine, Saracenic, Gothic, Renaissance and Modern work.

Books Recommended.—History of Architecture, by Fergusson (4 vols.) A History of Architecture, by Banister Fletcher (1 vol.)

Building Construction.—Description of the nature and proper utilisation of building materials, and of the modes of construction adopted in the various building trades.

Books Recommended.—Building Construction, Rivingtons (vols. 1, 2, 3); Building Construction, Elementary Course, by Chas. F. Mitchell; Building Construction, Advanced Course, by Chas. F. Mitchell; Practical Building Construction, by J P. Allen; Elementary Practical Building Construction, Stage 1, by Frank William Booker.

72.—MINING.

1. Valuable mineral deposits. Circulation of water. Fault rules. Forms of deposits. Rich parts of veins. Genesis of mineral veins. Characteristics of different kinds of deposits. Classification of deposits. Chemistry of deposits, solvents, precipitants. Examples of different kinds of valuable mineral deposits. Various minerals, their value and the uses to which they are put.

2. Prospecting, or the search for minerals.

3. Boring, and the appliances used in connection therewith.

4. Laying out mines (shafts, winzes, rises, adits, drifts, cross-cuts, stopes, etc.).

5. Breaking ground. Hand tools, rock drills, channelling machines, coal cutters, wire saws, steam shovels, dredges. Explosives and their use in blasting.

6. Supporting excavations by timbering, masonry, or metallic supports. Pneumatic method. Freezing method. Filling.

7. Methods of extracting minerals. Quarrying, ground sluicing, hydraulic sluicing, extraction through bore holes, caving, stoping, longwall, pillar and stall, etc.

8. Haulage. Vehicles. Self-acting incline. Engine plane. Main and tail ropes. Endless rope. Aërial ropeways. Transport by shoots and pipes.

9. Hoisting. Windlass, whip, whim. Pit-head frame. Ropes, chains and attachments. Safety appliances. Buckets, skips and cages. Keps. Signalling.

10. Travelling. Steps, ladders. Man engines. Buckets. Cages. Trucks.

11. Drainage. Dams, surface and underground. Various means of lifting water.

12. Ventilation. Gases met with in mines. Natural ventilation. Artificial ventilation. Measuring and testing air.

13. Illumination of mines. Candles, oil lamps, electric lights.

14. Accidents. Common causes of accidents.

15. Mine management. Books to be kept. Employment of labour. Assay plans. Mine stores. Reports.

16. Mine examination. Points to be considered. Sampling mines. Valuaton of mines. Financial problems.

17. Legislation affecting mining.

18. Ore dressing. General. Desiccation. Reduction. Separation. Sizing. Classification. Concentration. Conveyers. Special methods. Trees. Weighing. Sampling. Disposal of products.

Text Books.—A Treatise on Ore Deposits (J. A. Phillips and H. Louis); Ore and Stone Mining (Dr. C. Le Neve Foster); Colliery Manager's Handbook (C. Pamely); Ore Dressing (R. H. Richards). The following books may also be consulted:—The Mineral Resources of New South Wales (E. F. Pittman); Genesis of Ore Deposits (Posepny, van Hise, Weed and others); Economic Mining (C. G. W. Lock); A Practical Treatise on Hydraulic Mining in California (A. J. Bowie); Mine Timbering (J. Storms); Mine Drainage, Pumps, etc. (H. Behr); A Text Book of Coal Mining (H. W. Hughes); Well Boring for Water Brine and Oil (C. S. Isler); Ore Sampling (T. Rickard and others); Mine Accounts and Mining Bookkeeping (J. G. Lawn).

73.—SURGICAL AND MECHANICAL DENTISTRY.

(*a*) Special Diseases of the Teeth.

Mr. R. Fairfax Reading, M.R.C.S., &c.

1. Surgical Anatomy of the Teeth, Temporary and Permanent.

2. Extraction—Instruments to be used.

3. Accidents during and after extraction. Hæmorrhage. Position when under anæsthetics and special instruments required.

4. Condition of Teeth and Jaws at Birth.

5. Temporary Dentition and its Complications.

6. Permanent Dentition—Dates of eruption. General characters. Modifications.

7. Abnormalities—Syphilitic. Stomatitic. Supernumerary. Geminated. Dilacerated.

8. Caries—Etiology. Terminations. Complications. Sequelæ. Treatment, preventive and curative.

9. Diseases of the Pulp—Hyperæmia. Acute and Chronic Inflammation. Exposure. Gangrene. Polypus. Calcification.

10. Abscess—Varieties. Sequelæ.

11. Diseases of the Pericementum—Acute and Chronic Septic pericementitis. Non-septic pericementitis. Salivary Calculus.

12. Pyorrhœa Alveolaris.

13. Tumours—Dental Cyst. Odontome. Epulis.

14. Reflex Disorders of Dental Origin.

15. Injuries—Fracture of Alveolus. Dislocation. Accidental Extraction. Infection of Wound. Fractured Teeth.

16. Replantation. Transplantation. Implantation.

17. Fracture of Jaw—Treatment of loose fragments and broken teeth. Splints. Operative treatment.

18. General Hygiene of the Mouth and Teeth in relation to Health.

19. Root canals, treatment and filling.

20. Cleft palate, deformities and restorative appliances.

(*b*) Clinical Dental Surgery.

Mr. N. V. Pockley, D.D.S.

1. The Teeth—Definition, nomenclature, structure, form, surfaces, arrangement.

2. Sterilisation—Mouth, hands, instruments, &c.

3. Examination of the Teeth—Appliances, methods, removal of deposits, separating, records, &c.

4. Stages of Caries—Superficial, moderate, deep.

5. Exclusion of Moisture—Appliances, methods.

6. Preparation of Cavities—Opening, removing decay, shaping, sterilising.

7. Classification of Cavities—(*a*) Simple cavities on exposed surfaces, (*b*) Simple approximal cavities, (*c*) Compound cavities.

8. Filling Materials—Gold, tin, amalgam, cement, gutta percha.

9. Cavity Linings—Indications for, materials.

10. Filling Cavities with gold and with tin.

11. Filling Cavities with plastic materials.

12. Combination fillings.

13. Matrices—Forms, uses, dangers.

14. Porcelain inlays.

15. Bleaching of discoloured teeth.

16. Care and treatment of deciduous teeth.

Orthodontia.

Etiology. Classification of cases. Movements to be produced. Materials, appliances and methods. Simple cases and methods of correction. Complicated cases and methods of correction.

(*c*) Crown and Bridge Work.

Mr. W. Septimus Hinder, D.D.S.

1. History, definition and application.

2. Materials and instruments required.

3. Selection of cases for crown work.

4. Treatment and preparation of roots for reception of the various forms of pivot crown.

5. Construction and mounting of porcelain and facing crowns.

6. Preparation of teeth for the adjustment of hollow metal crowns.

7. The hollow metal crown.

8. Porcelain faced hollow metal crown.

9. Seamless crowns.

10. Principles involved in the selection of cases for bridge work.

11. Construction and fitting of the various forms of fixed bridges.

12. Application to special cases.

13. Removable bridges.

14. Material and various methods employed in setting crown and bridge work.

15. Porcelain as applied to crown and bridge work.

16. General principles.

17. The various kinds of porcelain bodies, their composition and fusing points.

18. Manipulation of the body.

19. The construction of porcelain crowns.

(*d*) Mechanical Dentistry.

1. Preparation of the mouth.
2. Impressions and their treatment.
3. Models—Preparation for metal and vulcanite.
4. Moulding—Dies and counter-dies.
5. Swaging of the various forms of metal plates.
6. Attachment—Clasps, air chambers, etc.
7. Combination dentures.
8. The selection of teeth.
9. Articulation.
10. Vulcanisable rubber—Description and application.
11. Vulcanising and finishing.
12. Treatment of various abnormalities.

Text Books Recommended.—Essig's and Kirk's American Text Books; Tomes; Richardson's Mechanical Dentistry; Kingsley's Oral Deformities; Evans' Crown and Bridge Work; Guilford's Orthodontia; Farrar's Irregularities; Dental Metallurgy, E. A. Smith (Churchill & Co.); Angle's Malocclusion of the Teeth; Goslee's Principles and Practice of Crowning Teeth; Smale and Colyer, Diseases and Injuries of the Teeth.

Practical Requirements.

FIRST YEAR.

Section Cutting and Printing.
Drawing and Modelling.
Partial Upper Vulcanite Plate without Teeth, and Repair of a Similar Case.

SECOND YEAR.

Preparation of 20 Cavities in Extracted Teeth and filling of 10 of same with non-cohesive tinfoil and 5 with G.P.

Partial Upper Vulcanite Plate with Teeth attached.

Partial Upper and Partial Lower Metal Plates without Teeth.

THIRD YEAR.

The Preparation and Insertion of at least 5 Porcelain Inlays in Teeth out of the Mouth.

Magill Bands with various attachments (tubes, spurs, etc.)

Jack Screws, Springs (piano wire and German Silver).

Swaged Caps for ant. and post. Teeth.

Inclined Planes. Coffin Split Plate.

Vulcanite Work—Full upper gum-section case.

Preparation of roots for and construction of

3 Hollow Metal Crowns.

2 Richmond Incisor Crowns.

1 Half Band Incisor Crown.

2 Porcelain Faced Bicuspid Crowns (different methods).

1 All Porcelain Bicuspid Crown, using full band and porcelain facing.

FOURTH YEAR.

1 Bridge with two or more Teeth suspended.

1 Splint for Fractured Jaw.

1 Cleft Palate Case complete.

Passing of Examination for Certificate of Efficiency in Extraction.

Metal Work—Partial lower with four or more tube teeth and at least two soldered.

FACULTY OF LAW.

The following Regulations have been passed by the Senate :—

1. A Class Examination shall be held at the end of each term by each member of the Teaching Staff in the subject matter of his lectures for the Term, and a report of the results of each examination shall be forwarded to the Registrar to be laid before the Faculty.

2. Every candidate for the degree of LL.B. shall be required to produce certificates from the Lecturer in Procedure and the Lecturer in Equity that he has during his law course attended in court and taken a satisfactory note of such cases as shall be approved of by the said lecturers.

LECTURE AND EXAMINATION SUBJECTS FOR THE DEGREE OF LL.B.

74.—JURISPRUDENCE, LEGAL HISTORY, AND THE ELEMENTS OF POLITICAL SCIENCE.

This subject will include :—(1) An examination into the nature and relation of certain fundamental legal conceptions, together with a sketch of their historical development; (2) The outlines of English legal history; and (3) The elements of political science.

Students are recommended to read—Holland, "Elements of Jurisprudence"; Austin, "Jurisprudence" (Student's edition), Introduction and Part I., ch. 1, 5, 6, and 11; Maine, "Ancient Law"; Carter, "History of English Legal Institutions"; and Sidgwick. "Elements of Politics." Reference may also be made to the following works, and especially to such parts thereof as may be indicated in the lectures :—Austin, "Jurisprudence" (Student's edition), Parts II. and III.; Pollock, "First Book of Jurisprudence"; Maine, "Early Institutions," "Early Law and Custom," and "Village Communities"; Jenks, "Law and Politics in Middle Ages;" Bryce, "Studies in History and Jurisprudence"; Bentham, "Theory of Legislation" (by Dumont); Farrer, "The State in relation to Trade"; and Jevons, "The State in relation to Labour"; and Dicey, "Relation between Law and Public Opinion in England during the 19th Century."

75.—ROMAN LAW.

This subject will include :—(1) The history of the sources of Roman Law, together with an account of the administrative and judicial organisation of the Empire under Constantine, and a

sketch of the subsequent history and influence of Roman Law; (2) The text of the Institutes of Justinian (omitting iii. 1 to 12, and iv. 6 to end); and (3) The general principles of Roman Law, so far as these are treated of in the Institutes of Justinian.

Students are recommended to read—Hunter, "Introduction to Roman Law" (and thereafter); Moyle, "The Institutes of Justinian" and commentary. Reference may also be made to Hunter, "Roman Law in the order of a Code"; and Sohm, "The Institutes of Roman Law" (translated by J. C. Ledley).

76.—CONSTITUTIONAL LAW.

This subject will include:—(1) An account of the general features of the British Constitution, and especially of those which are essential to a proper understanding of the imperial factors in Australian government; (2) A moro particular account of the constitution and government of the Commonwealth; and (3) An account of the history and of the present institutions of the government of the State of New South Wales.

Students are recommended to read the following text-books and statutes:—Dicey, "Introduction to the study of the Law of the Constitution"; Anson, "The Law and Custom of the Constitution" (Vol. II., ch. 1, 2, 3, 4, 5, 6, 8 and 10, except S. 4); Thomas, "Leading Cases in Constitutional Law"; Webb, "Imperial Law" (ch. 3); Jenks, "History of the Australian Colonies," The Commonwealth of Australia Constitution Act, 1900, together with other Acts and Instruments relating to the Government of the Commonwealth; The Constitution Statute (18 and 19 Vict. c. 54) and "The Constitution Act, 1902"; together with other Acts and Instruments relating to the Government of New South Wales. Reference should also be made to the following works:—Anson, "Law and Custom of the Constitution" (Vol. I.); Ridges, "Constitutional Law of England"; Quick and Garran, "Commentaries on the Commonwealth of Australia Constitution Act"; Moore, "The Constitution of the Commonwealth of Australia"; and to such statutes and cases as may be indicated in the lectures.

77.—INTERNATIONAL LAW, PUBLIC AND PRIVATE.

This subject will include:—(1) An account of the nature, history and sources of Public International Law; (2) An account of the rules generally accepted as determining the conduct of States both in their normal relations, in the relation of war, and in the relation of neutrality; and (3) An account of the general principles of Private International Law or the Conflict of Laws.

Students are recommended to read:—Hall, "Treatise on International Law"; Cobbett, "Leading Cases and Opinions on International Law"; and Foote, "Private International Law." Reference should also be made to the following works:—Lawrence, "Principles of International Law," and Dicey, "Digest of the Law of England with reference to the Conflict of Laws"; and to such statutes and cases as may be indicated in the lectures.

78.—THE LAW (in force in New South Wales) RELATING TO CONTRACTS, MERCANTILE LAW, TORTS, CRIMES AND DOMESTIC RELATIONS.

The lectures on this subject will comprise :—An account of the law in force in New South Wales with respect to (1) Contracts generally; (2) Mercantile Law (including Negotiable Instruments, Partnership, Insurance, Carriage and Mercantile Agency); (3) Torts, and obligations arising from civil wrongs at common law; (4) Crimes, including offences punishable summarily; and (5) Domestic Relations and Lunacy.

Text-books and Statutes :—Anson, "The Law of Contract"; Stevens, "Elements of Mercantile Law" Part II., together with the cases of Lickbarrow v. Mason and Miller v. Race (with notes), from Smith's "Leading Cases at Common Law"; Pollock, "The Law of Torts"; Kenny, "Outlines of Criminal Law"; Kenny, "Selection of Cases illustrative of Criminal Law"; Stephen, "Commentaries," Book III.; together with the following statutes (with commentaries where indicated)—The Claims against the Government, etc., Act, 1897; The Employers Liability Act, 1897; The Defamation Act, 1901; The Crimes Act, 1900 (Hamilton and Addision); and The Crimes Amendment Act, 1905. Reference should also be made to other statutes (see appended list) and decisions relating to these subjects, and especially to such statutes and decisions as may be indicated in the lectures.

79.—THE LAW OF PROPERTY AND PRINCIPLES OF CONVEYANCING (as in force in New South Wales).

The lectures on this subject will comprise :—(1) An introductory course dealing with the general principles of the Law of Property, as regards the nature, creation, transfer and devolution of estates and interests that may be held in real and personal property in New South Wales; and (2) A more advanced course on the system of Conveyancing in vogue in New South Wales, with respect both to interests in land (whether held under a Common Law Title or under the Real Property Act) and interests in personalty.

Text-books and Statutes :—Millard, "Law of Real Property in N.S.W."; Millard, "Law of Personal Property in N.S.W."; Elphinstone, "Introduction to Conveyancing"; Hogg, "Hints on the Law and Practice of Conveyancing in New South Wales"; together with the following statutes (with commentaries where indicated)—The Conveyancing and Law of Property Act, 1898; The Conveyancing and Law of Property (Supplemental) Act, 1901; The Wills, Probate and Administration Act, 1898; The Landlord and Tenant Act, 1899; The Apportionment Act, 1905; The Forfeiture of Leases Act, 1901; The Forfeiture and Validation of Leases Act, 1905; The Registration of Deeds Act, 1897; The Real Property Act, 1900 (Canaway); The Married Women's Property Act, 1901; The Inheritance Act, 1901; and the Limitations of Actions Act

3 and 4, Will. IV., c. 27 (adopted by 8 Will. IV., No. 3); The Dedication by User Limitation Act, 1902, 5 Vict. No. 9, sections 39, 40, 41; The Ancient Lights Declaratory Act, 1904; The Bills of Sale Act, 1898; The Bills of Sale (Amendment) Act, 1903; The Lien on Crops and Wool and Stock Mortgages Act, 1898; The Trade Marks Act, 1900; The Patents Act, 1899; The Patents Act, 1903 (Federal); and the Copyright Act, 1879. Reference should also be made to Williams, "Principles of the Law of Real Property"; Williams, "Principles of the Law of Personal Property"; Jenks, "Modern Land Law"; Hogg, "Conveyancing Precedents and Forms"; Prideaux, "Dissertations on the Law and Practice of Conveyancing," and to such other statutes (see appended list) and decisions relating to these subjects as may be indicated in the lectures.

80.—PROCEDURE IN CIVIL AND CRIMINAL CASES (both before the Supreme Court in its Common Law Jurisdiction, and also before Courts of Inferior Jurisdiction); together with THE LAW OF EVIDENCE AND PLEADING; AND THE CARDINAL RULES OF LEGAL INTERPRETATION (as in force in New South Wales).

The lectures on this subject will comprise :—An account of (1) The system of procedure in vogue in Civil and Criminal Cases at Common Law both before the Supreme Court and Courts of inferior jurisdiction; (2) The principles of the Law of Evidence; (3) The principles of Pleading; and (4) The more important rules relating to Legal Interpretation.

Text-books and Statutes: - Smith, "Action at Law"; Stephen, "Digest of the Law of Evidence"; Stephen, "The Principles of Pleading in Civil Actions"; Beal, "Cardinal Rules of Legal Interpretation"; the Duchess of Kingston's Case, with notes, from Smith's "Leading Cases"; together with the following statutes (with commentaries where indicated) :—The Evidence Act, 1898; The Small Debts Recovery Act, 1899; The Common Law Procedure Act, 1899 (Rolin and Innes); The Attachment of Wages Limitation Act, 1900; The Crimes Act, 1900, Parts XI., XII., XIII., XIV. (caps. 1 and 4), XV. and XVI. (Hamilton and Addison); The Supreme Court Procedure Act, 1900; The Supreme Court and Circuit Courts Act, 1900; The District Courts Act, 1901 (Foster and Bonthorne), and District Courts Act, 1905; The Judgment Creditors Remedies Act, 1901; The Interstate Debts Recovery Act, 1901; The Jury Act, 1901, Parts VII., IX., X., XI., XII. and XIII.; The Interpleader Act, 1901; The Prohibition and Mandamus Act, 1901; The Arrest on Mesne Process Act, 1902; The Justices Act, 1902; The General Legal Procedure Act, 1902; The Commercial Causes Act, 1903; The Legal Process Facilitation Act, 1904; The Small Debts Recovery (Amending) Act, 1905; The District Courts (Amendment) Act, 1905; The State Laws and Records Recognition Act, 1901 (Federal); The Service and Execution of Process Acts, 1901-1905 (Federal); The Judiciary Act, 1903 (Federal); The High Court Procedure Act, 1903 (Federal); The High Court Procedure Amendment Act, 1903 (Federal); and The Evidence Act, 1905 (Federal). Reference should also be made to other statutes (see appended list) and decisions relating to these subjects, as may be indicated in the lectures.

81.—EQUITY AND COMPANY LAW; THE LAW RELATING TO BANKRUPTCY, PROBATE AND DIVORCE (as in force in New South Wales); TOGETHER WITH PROCEDURE IN THOSE JURISDICTIONS.

The lectures on these subjects will comprise:—(1) An account of the general principles of Equity and Company Law, together with Equity Practice; and (2) A series of shorter courses on each of the following—(*a*) the Law and Practice in Bankruptcy, (*b*) the Law and Practice in Probate, and (*c*) the Law and Practice in Divorce.

Text-books and Statutes:—"Principles of Equity" (Snell), together with the cases of Russel v. Russel, Bassett v. Nosworthy and Penn v. Baltimore, with notes, from White and Tudor's Leading Cases in Equity; Williams, "Personal Property," Part II., ch. 4 (Bankruptcy), and ch. 6 (Companies) (a short summary of the local law on these two subjects will be found in Millard, "Personal Property," pp. 127-166 and 192-218); Walker and Elgood, "Executors and Administrators"; Dixon, "Law of Divorce" (omitting parts relating to practice); together with the following statutes (with commentaries where indicated)—The Equity Act, 1901 (Rich, Newham and Harvey); The Companies Act, 1899 (in default of a more recent commentary students are advised to refer to the notes contained in Rolin and Rich on the corresponding provisions of the Acts of 1874 and 1888, and the No Liability Mining Companies Act, 1896); The Bankruptcy Act, 1898 (Salusbury); The Wills Probate and Administration Act, 1898, Part II. (Walker and Bignold); The Matrimonial Causes Act, 1899 (Whitfield); The Trustee Act, 1898; The Trustee Act Amendment Act, 1902; and The Partnership Act, 1892. Reference should also be made to such other statutes (see appended list) and decisions relating to these subjects, as may be indicated in the lectures.

APPENDED LIST OF STATUTES.

The Conveyancing and Law of Property Act, 1898; The Conveyancing and Law of Property (Supplemental) Act, 1901; The Infants' Custody and Settlements Act, 1899; The Children's Protection Act, 1902; The Landlord and Tenant Act, 1899; The Partition Act, 1900; The Registration of Deeds Act, 1897; The Wills Probate and Administration Act, 1898; The Real Property Act, 1900; The Real Property and Conveyancing (Amendment) Act, 1901; The Stamp Duties Act, 1898; The Probate Duties (Amendment) Act, 1899; The Companies (Death Duties) Act, 1901; The Stamp Duties (Amendment) Act, 1904; The Stamp Duties (Deductions) Act, 1904; The Bills of Sale Act, 1898; The Bills of Sale (Amendment Act), 1903; The Money Lenders and Infants Loans Act, 1905; The Liens on Crops and Wool and Stock Mortgages Act, 1898; The Limitation of Actions Act, 3 and 4 Will. IV., c. 27 (adopted by 8 Will. IV., No. 3), and 5 Vict., No. 9, s. 39, 40 and 41 (or Acts consolidating or superseding the same); The Married Women's Property Act, 1901; The Trade Marks Act, 1900; The Patents Act, 1899; The Patents Act, 1903 (Federal); The Copyright Act, 1879; The Inheritance Act, 1901; The Equity Act, 1901; The Trustee Act, 1898; The Companies Act, 1899; The Companies Act Amendment Act, 1900; The Partnership Act, 1892; The Claims against the Government and Crown

Suits Act, 1897; The Claims against the Government and Crown Suits Amendment Act, 1904; The Employers Liability Act, 1897; The Factors Act, 1899; The Compensation to Relatives Act, 1897; The Bills of Exchange Act, 1887; The Negotiable Instruments Procedure Act, 1901; The Forfeiture of Leases Act, 1901; The Forfeiture and Validation of Leases Act, 1905; The Common Carriers Act, 1902; The Defamation Act, 1901; The Life, Fire and Marine Insurance Act, 1902; The Life Assurance Companies Act, 1905 (Federal); The Innkeepers Liability Act, 1902; The Crimes Act, 1900; The Witnesses Examination Act, 1900; The Supreme Court and Circuit Courts Act, 1900; The Supreme Court Procedure Act, 1900; The Judgment Creditors Remedies Act, 1901; The Interpretation Act, 1897; The Acts Interpretation Act, 1901 (Federal); The Acts Interpretation Act, 1904 (Federal); The Bankruptcy Act, 1898; The Matrimonial Causes Act, 1899; The Contractors Debts Act, 1897; The Coroners Act, 1898; Masters and Servants Act, 1902; The Deserted Wives and Children Act, 1901; The Infant Protection Act, 1904; The Neglected Children and Juvenile Offenders Act, 1905; The Police Offences Act, 1901, Parts I. and II.; Service and Execution of Process Act, 1901 (Federal); The Marriage Act, 1899; The Legitimation Act, 1902; The Pawnbrokers Act, 1902; The Games, Wagers and Betting Houses Act, 1901; The Usury, Bills of Lading and Written Memoranda Act, 1902; The Sea Carriage of Goods Act, 1904 (Federal); The Arbitration Act, 1902; The Lunacy Act of 1898.

ADMISSION OF BARRISTERS.

Certain privileges are conceded to Graduates and Third Year Students of the University in respect to the conditions necessary for admission to the Bar. As to these, candidates are advised either to refer to the Rules for the admission of Barristers (see Law Almanac), or to apply for information to the Secretary of the Barristers' Admission Board, Supreme Court.

ADMISSION OF ATTORNEYS.

The following are extracts from the Rules of the Supreme Court for the admission of Attorneys, which refer to Examinations held at the University:—

The degree of Bachelor of Laws of the University of Sydney obtained by an Articled Clerk who has attended the law lectures appointed by the said University shall exempt him from passing the Intermediate Law Examination and sections 1, 2 and 3 of the Final Examination: Provided, however, that he shall be required to pass section 4 of the Final Examination, and to give all notices and pay all fees as required by the existing Rules in the case of an Articled Clerk proceeding to Final Examination.

Every person desirous of entering into Articles of Clerkship who shall not have taken a Degree in the University of Sydney, or in some other University recognised by it, shall, before approval of such Articles, produce to the Prothonotary a Certificate of his having passed a Matriculation Examination in the said University, or in some other University recognised by it; or a Certificate from the Registrar of the University of Sydney of his having passed some equivalent examination before Professors or Examiners appointed by the Senate thereof; or a Certificate of his having passed in

England, Scotland or Ireland the Preliminary Examination which Articled Clerks may be there required to pass, and shall lodge with the said Prothonotary a copy of such Certificate.

Preliminary Examinations (equivalent to the Matriculation Examination) for Articled Clerks are held at the University in the months of April and November, commencing on the first Monday in April, and the second Monday in November. Fee, £5 10s. 6d., to be paid to the Prothonotary of the Supreme Court.

The subjects of the Examinations to be held in November, 1904, and April, 1905, will be the same as those prescribed for the Matriculation Examination of March, 1905, and so on in future years. (See page 76.)

Examination Subjects for the Degree of LL.D.

The Examination for the Degree of Doctor of Laws will include the following subjects:—

I.—LEGAL HISTORY.

Candidates will be examined both in general and more especially in English legal history. In addition to the text-books and books of reference prescribed for corresponding parts of the LL.B. Examination, candidates are recommended to read or refer to Pollock and Maitland, "History of English Law"; Holmes, "The Common Law"; Lee, "Historical Jurisprudence"; and Stephen, "History of the Criminal Law of England."

II.—ROMAN LAW.

The Examination in this subject will have reference to a special subjec from the *Digest*, to be selected from time to time, and to be studied in connection with the corresponding branch of English Law. Until further notice the special subject will be "The Roman Law of Sale," as set forth in the following Titles of the *Digest*: XVIII., 1, 5, 6, and XIX., 1. These portions of the *Digest* should be studied in connection with Moyle's treatise, "The Contract of Sale in the Civil Law."

III.—ENGLISH LAW (as in force in New South Wales).

One of the following special subjects:—

(1.) The Common Law (including Mercantile Law, Criminal Law, and the Law of Evidence and Procedure).

Candidates, in addition to the books and statutes prescribed for the corresponding portions of the LL.B. Examination, are recommended to make a special study of the leading cases, and especially of those contained in Smith, "Leading Cases," and Tudor, "Leading Cases on Mercantile Law and Maritime Law."

(2.) Equity (including Bankruptcy, Probate, Company Law, and Procedure).

Candidates, in addition to the books and statutes prescribed for the corresponding portions of the LL.B. Examination, are recommended to make a special study of the leading cases, and especially those contained in White and Tudor, "Leading Cases in Equity."

(3.) The Law of Property and Conveyancing.

In addition to the books and statutes prescribed for the corresponding portion of LL.B. Examination, candidates are recommended to make a special study of the leading cases, and especially of those contained in Tudor's "Leading Cases on Real Property and Conveyancing, &c." Candidates will also be expected to show a competent knowledge of the practice of conveyancing.

(4.) Constitutional Law.

In addition to the books and statutes, &c., prescribed for the corresponding portion of the LL.B. Examination, candidates are recommended to read or refer to the following works:—Quick and Garran, "Commentaries on the Commonwealth of Australian Constitution Act"; Clark, "Australian Constitutional Law"; Moore, "The Constitution of the Commonwealth of Australia"; Todd, "Parliamentary Government of the British Colonies"; Forsyth, "Cases and Opinions in Constitutional Law"; and Ilbert, "Legislative Methods and Forms."

IV.—INTERNATIONAL LAW (Public and Private).

In addition to the books prescribed for the corresponding portion of the LL.B. Examination, candidates are recommended to read Westlake, "Private International Law"; and Dicey, "Conflict of Laws."

Notice.—Candidates are at liberty, on giving six months' prior notice, and with the approval of the Dean of the Faculty, to offer other books in lieu of those recommended. Candidates are also advised that a thorough knowledge and apt treatment of a fair proportion only of the subjects touched on in any paper will be regarded as sufficient evidence of proficiency, as regards that particular branch of the Examination.

EXAMINATION SUBJECTS.

FACULTY OF ARTS.

EXAMINATION FOR THE DEGREE OF B.A.

(See By-laws, Chap. XV.)

EXAMINATION FOR THE DEGREE OF M.A.

(See By-laws, Chap. XV., Sec. 24.*)

School of Classical Philology and Ancient History.

Candidates may offer themselves for examination in one or more of the following subjects:—

1. The History of Greece, to the death of Demosthenes. In addition to a general knowledge of the subject, special knowledge of one of the following periods will be required:—
   (*a*) Down to 404 B.C., with Herodotus, Thucydides, and Xenophon (Hellenics I., II.).
   (*b*) From 431 B.C. to the death of Demosthenes, with Thucydides, Xenophon (Hellenics) and Demosthenes (Phil. I., Olynth. I.-III., De Pace, Phil. II., De Chers., Phil. III., De Corona).
2. The History of Rome, to the death of Marcus Aurelius. Special knowledge of Cicero's Letters and Tacitus' Annals will be required.
3. Greek Literature, to the death of Demosthenes. In addition to a general knowledge of the whole subject, special knowledge of one of the following groups will be required:—
   (*a*) Lyric: Fragments as in Smyth's *Greek Melic Poets*, *or* Farnell's *Greek Lyric Poetry*.
   (*b*) Rhetorical: Specimens of the Attic Orators, such as those given by Jebb; together with Æschines, Against Ctesiphon; Demosthenes, On the Crown; Isocrates, Panegyricus.

* Candidates may be admitted to *Examination* for the Degree of M.A. one year after obtaining the Degreee of B.A. The Degree of M.A. cannot be conferred until the time has elapsed which is required by the By-laws.

Candidates taking this subject are also recommended to read Longinus, On the Sublime (Rhys Roberts). They will be required to show a general knowledge of, and to translate passages from, Greek authors other than those specified.

4. The Homeric Poems; a critical study of the structure of the *Iliad*, based on such books as Jebb's *Introduction to Homer;* H. Browne's *Handbook to Homeric Study;* Leaf's edition of *The Iliad.*

5. The Greek Drama. Candidates will be expected to be familiar with the history of Greek dramatic art in all its branches, both from the literary and from the practical or purely theatrical point of view. Haigh's *Attic Theatre*, and Haigh's *Tragic Drama of the Greeks* would form the introduction to such study. Candidates would also be expected to offer as subjects of more minute literary study at least six plays of Æschylus, Sophocles, Euripides, and Aristophanes (all four authors being represented in the candidate's selection). Candidates are recommended to consult the Professor with reference to the course of study in this and other subjects.

6. Roman Literature, to the death of Tacitus. Special knowledge will be required of Virgil and Horace; and candidates will be required to show a general knowledge of, and to translate passages from, other Latin authors.

7. Greek Constitutional History. In addition to a general knowledge of the subject, to be gained from such a book as Greenidge's *Handbook to Greek Const. History*, special knowledge will be required of Plato, Republic, Books VIII.-IX.; Aristotle, Politics, and Athenaion Politeia; Xenophon, Respubl. Laced. and Respubl. Ath. Reference also should be made to Freeman's *History of Federal Government in Greece and Italy.*

8. Comparative Philology, with special application to the Greek and Latin languages. Books especially recommended: King and Cookson's *Sounds and Inflections in Greek and Latin;* Monro's *Homeric Grammar;* Wordsworth's *Specimens of Early Latin;* Lindsay's *The Latin Language;* Giles' *Manual of Comparative Philology.*

Candidates for Honours are required to offer not less than two of the above subjects; but Honours will not be awarded unless a sufficiently high standard is attained in each of the subjects selected.

The Greek and Latin books especially prescribed must be read in the original language. Books which have in whole or in part been included in the candidate's course for the B.A. Degree may be offered only subject to the approval of the Professor; but other books may, subject to the approval of the Professor, be substituted for those here specified.

SCHOOL OF LOGIC, MENTAL, MORAL AND POLITICAL PHILOSOPHY.

Candidates may offer themselves for examination in one or more of the following subjects:—

1. Logic.
2. Psychology.
3. Ethics.
4. Metaphysics.
5. Education.
6. Economics.
7. Politics.
8. Sociology.

Candidates for Honours are required to offer not less than two of these subjects. All candidates will be required to submit themselves to examination—

(*a*) On the general history and literature of the subject or subjects chosen.

(*b*) On a special branch of, or period in the history of, the subject or subjects chosen. The branch or period to be chosen by the candidate, subject to the approval of the Professor of Logic and Mental Philosophy.

In addition, all candidates will be required to present a thesis on some subject connected with the branch of study selected. The choice of the subject must be approved by the Professor. The thesis must give evidence of critical and constructive philosophical ability on the part of the author.

Candidates must have previously attended classes in the department of Philosophy for a period of at least two years.

No books are prescribed, and considerable freedom will be allowed in the choice of subjects, but candidates are recommended to consult the Professor of Logic and Mental Philosophy when arranging their courses of study.

SCHOOL OF MATHEMATICS AND NATURAL PHILOSOPHY.

ORDINARY DEGREE.—Candidates will be examined in the following subjects:—

Analytical Geometry of Two and Three Dimensions.

The Application of the Calculus to the Theory of Plane Curves.

Statics and Dynamics, including the simpler parts of the Theory of Attraction and Rigid Dynamics.

The Elementary Mathematical Theory of *one* of the subjects prescribed for the course in Mathematical Physics of the Third Year in Arts.

HONOURS DEGREE.—Candidates may offer themselves for examination in any Mathematical subjects distinctly in advance of those prescribed for the B.A. Course, the subjects to be chosen from both the Departments of Pure and Applied Mathematics, and to be approved by the Professor of Mathematics.

The examiners will be at liberty to declare that candidates, though they may not have deserved Honours, have acquitted themselves so as to deserve the ordinary Degree, and such candidates shall be held to have passed the examination for that degree.

SCHOOL OF MODERN LITERATURE.

Candidates may offer themselves for examination in one or more of the following subjects:—

1. English Philology, English Literature before Chaucer, Special knowledge of Beowulf, the Chronicle, and Sir Gawayne and the Grene Knight will be required.
2. English Literature from Chaucer to the present day. Special knowledge will be required of three of the following authors:—Chaucer, Shakespeare, Burke, Tennyson.
3. German Philology. German Literature before Klopstock. Special knowledge of the Niebelungen Lied, Walter von der Vogelweide, Hans Sachs (Dichtungen, Goedeke and Tittman).
4. German Language and Literature from Klopstock to the present day. Special knowledge will be required of Goethe's Novels and Dramas, of Schiller's Plays and Poems, and of Lessing's chief Dramas and Prose Works.
5. French Philology. French Literature till 1600. Special knowledge will be required of the Chanson de Roland, of the Romances and Pastorals (Romanzen and Pastorellen, ed. *Bartsch*), and of Montaigne.
6. French Language and Literature from 1600 to the present day. Special knowledge will be required of

Molière, of Voltaire's Historical Works and La Henriade, of Sainte-Beuve's Port Royal, and Hugo's Dramas.

Subject to the approval of the Professor of Modern Literature, candidates may offer other books and authors of similar nature and extent in place of those specified.

In all these subjects there may be *vivâ voce* examination in addition to the examination in writing.

Candidates will be required to present an essay on some subject connected with the period, and written in the language they have selected. The choice of the subject will be left to themselves, but must be approved by the Professor.

Candidates for Honours are required to offer (*a*) not less than two of the preceding subjects, or (*b*) one of the six subjects mentioned, along with one of the subjects prescribed for Classics, Philosophy or History. In the latter case the approval of both Professors concerned must be obtained.

School of History.

Candidates are required:—

(A) To write an essay on some subject approved by the Professor of History. The essay should be of not less than 50 pages, and of not more than 150 pages. The essay must be sent to the Registrar on or before the 15th of February.

(B) To offer themselves for examination in one or more of the following subjects:—

(1) The Renascence and the Reformation, 1453 to 1535.

Books Recommended.—*Machiavelli's* Prince; *Erasmus'* Praise of Folly; *Cellini's* Autobiography; *Luther's* Primary Works (ed. Wace & Buchheim); *Symonds'* Renascence in Italy; *Creighton's* Papacy; *Lilly's* Renaissance Types; *Beard's* Hibbert Lectures; *Beard's* Luther; *Villari's* Savonarola; *Froude's* Erasmus; *Bridgett's* More; *Gairdner's* English Church in the 16th Century; *Pastor's* Papacy; *Ranke's* Popes; The Cambridge History, vol. 1.

Or,

The History of Protestantism in England from Wycliffe to Milton. Candidates will be expected to show knowledge of Continental Protestantism in so far as it has influence on the development of Protestant thought and practice in England.

BOOKS RECOMMENDED.—Special knowledge will be required of the following: *Wycliffe's* Select English Works, Vol. 3, pp. 211-496 (ed. T. Arnold); *Luther's* Primary Works (ed. Wace and Buchheim); *Calvin's* Institutes; *Hooker's* Ecclesiastical Polity—Preface; *Milton's* Treatises on Church Government and Christian Doctrine.

The following books are also recommended for study:—*Lechler's* Wycliffe; *Trevelyan's* England in the time of Wycliffe; *Beard's* Hibbert Lectures; *Beard's* Luther; The Zurich Letters; *Masson's* Life and Times of Milton; *Gairdner's* English Church in the 16th Century; *Wakeman's* History of the Church of England.

(2) The History of England from 1637 to 1660.

Special knowledge will be required of the following:—Clarendon, Books I. to VIII.; *Cromwell's* Letters and Speeches (ed. Carlyle); *Ludlow's* Memoirs; *Hutchinson's* Memoirs; *Milton's* Political and Ecclesiastical Pamphlets; *Gardiner's* Constitutional Documents.

The following books are also recommended:—*Gardiner's* History of England from 1603 to 1642; *Gardiner's* Great Civil War, and Commonwealth and Protectorate; *Masson's* Life and Times of Milton; *Morley's* Cromwell; *Firth's* Cromwell; *Firth's* Cromwell's Army; *Firth* on "Clarendon's History of the Rebellion" in English History Review for 1904.

(3) The History of England from 1756 to 1797.

Special knowledge will be required of the following:—The Political Works of Burke; *Adam Smith's* Wealth of Nations; *Paine's* Common Sense and Rights of Man; *Young's* Travels in France.

The following books are also recommended:—*Lecky's* History of England; *Trevelyan's* C. J. Fox; *Trevelyan's* American Revolution; *Morley's* Burke.

(4) The Growth of British Industry and Commerce from 1776 to the present time. Knowledge will also be required of the development of economic theory during the period.

Special knowledge will be required of the following:—*A. Smith's* Wealth of Nations; *J. S. Mill's* Political Economy; *Cobden's* Speeches on Freetrade; *Carlyle's* Past and Present.

The following books are also recommended:—Some recent handbook on Political Economy, as *e.g.*, *Marshall*, *Nicholson*, or *Walker*. Some account of the development of economic thought in England, as *e.g.*, *Ingram* or *Price*. *Ruskin's* Unto the Last; *Toynbee's* Industrial Revolution; *Cunningham's* Growth of English Industry and Commerce in Modern Times; *Gibbins'* Industry in England; *Morley's* Cobden; *Hobson's* Ruskin; *Hobson's* Problems of Poverty; *Webb's* Trade Unionism; *Webb's* Social Democracy.

Subject to the approval of the Professor of History, candidates may offer other subjects of similar nature and extent in place of those specified above.

Candidates who seek Honours are required to offer not less than two subjects.

Candidates may also be required to take papers on English History. Those candidates, however, who have shown adequate knowledge of this subject in the examinations held in connection with the Degree of B.A. will not be required to take these papers.

PUBLIC EXAMINATIONS.

Full particulars regarding these examinations can be had on reference to the "Manual of Public Examinations," which contains the By-laws, Subjects of Examination, Books Recommended, Directions for Candidates, Examination Papers, &c., and is obtainable from almost any bookseller.

LIST OF
*SCHOLARSHIPS, EXHIBITIONS, PRIZES, &c.

All students of the University who shall during their course have received Bursaries, Exhibitions, Scholarships or Fellowships, or Exemptions from Fees, are invited by the Senate to make returns to the University when their circumstances in life shall permit, for the purpose of conferring like benefits on future students. The names of all students making such return will be published in the University Calendar.

AWARDED AT THE MATRICULATION EXAMINATION.

The SALTING Exhibition—Awarded on the recommendation of the Trustees of the Sydney Grammar School to a student proceeding thence to the University. £25 for three years. (See page 226.) The last award was made in March, 1906.

The BOWMAN-CAMERON Scholarship—Every third year, for General Proficiency. £40 for three years. (See page 216.) The last award was made in March, 1905.

The COOPER Scholarship No. II.—Awarded to a student distinguished in Classics. £50 for one year. (See page 215.)

The BARKER Scholarship No. II.—Awarded to a student distinguished in Mathematics. £50 for one year. (See page 213.)

The LITHGOW Scholarship—Awarded to a student distinguished in modern languages (French and German). £50 for one year. (See page 215.)

The JAMES AITKEN Scholarship—For General Proficiency. £50 for one year. This Scholarship is not given in the year in which the Bowman-Cameron Scholarship is awarded. (See page 217.)

The FREEMASONS Scholarship—For sons of Freemasons. Every third year. £50 for three years. (See page 217.) The last award was made in March, 1905.

THE HORNER Exhibition—For proficiency in Mathematics. £8 for one year. (See page 228.)

* Scholars are required to proceed with their studies in the respective Faculties in which their Scholarships are awarded.

Three PETER NICOL RUSSELL Scholarships—For Mechanical Engineering. £75 for four years. (See page 206.)

BURSARIES of the annual value of £50 to £25 each are awarded from time to time. (See page 228.)

AWARDED AT THE FIRST YEAR EXAMINATIONS.

The COOPER Scholarship No. III.—For Classics. £50 for one year. (See page 215.)

The GEORGE ALLEN Scholarship—For Mathematics. £40 for one year. (See page 216.)

The *LEVEY Scholarship—Awarded in the Faculty of Arts or the Faculty of Science for Chemistry (theoretical and practical) and Physics (theoretical and practical). £40 for one year. (See page 212.)

The GARTON Scholarship No. I.—For French and German. £45 for one year. (See page 221.)

The *SMITH Prize—For Physics. £5. (See page 236.)

The SLADE Prizes—For Practical Chemistry and Practical Physics. £5 each. (See page 236.)

The COLLIE Prize—For Botany. £4. (See page 237.)

The STRUTH EXHIBITION—For General Proficiency. Awarded at the First Year Examination in Arts to a student entering the Faculty of Medicine. £50 for five years. (See page 227.) The last award was made in March, 1902.

The HENRY WAIT Bursary—For General Proficiency. Awarded at the First Year Examination in Arts to a student entering the Faculty of Medicine. £40 for five years. (See page 233.) The last award was made in March, 1906.

AWARDED AT THE SECOND YEAR EXAMINATIONS.

The COOPER Scholarship No. I.—For Classics. £50 for one year. (See page 214.)

The BARKER Scholarship No. I.—For Mathematics. £50 for one year. (See page 213.)

* Candidates for Honours and Scholarships in Physics are required to attend the Laboratory during one term, for two afternoons a week.

The GARTON Scholarship No. II.—For French and German. £45 for one year. (See page 222.)

The NORBERT QUIRK Prize—For Mathematics. £5. (See page 236.)

The DEAS-THOMSON Physics Scholarship—Awarded in the Faculty of Arts or that of Science for Physics. £50 for one year. (See page 214.)

The DEAS-THOMSON Geology Scholarship—Awarded in the Faculty of Science for Geology. £50 for one year. (See page 214.)

The CAIRD Scholarship—Awarded in the Faculty of Science for Chemistry. £50 for one year. (See page 217.)

The WILLIAM and JANE GRAHAME Mechanical Engineering Scholarship—Awarded in the Department of Engineering for Mechanical Engineering. £40 for one year. (See page 223.)

AWARDED AT EACH DEGREE EXAMINATION.

BRONZE MEDALS are awarded to the highest proficients in the various Degree Examinations.

SCHOLARSHIPS TENABLE BY GRADUATES.

The FRAZER Scholarship—Awarded upon the results of examinations, &c., in History. £70. (See page 219.)

The JAMES KING of Irrawang Scholarship—Awarded to a Graduate of not more than four years' standing. £130 for two years. The last award was made in March, 1906. (See page 218.)

The WOOLLEY Scholarship—Awarded to a Graduate in Arts of not more than four years' standing. £150 for two years. The last award was made in March, 1905. (See page 220.)

The JAMES COUTTS Scholarship—Awarded at the Third Year Examination in the Faculty of Arts for distinction in the study of the English Language and Literature. £50 for one year. (See page 223.)

The JOHN COUTTS Scholarship—Awarded for distinction in the Science course to a student graduating as Bachelor of Science with honours. £50 for one year. (See page 223.)

Her Majesty's Commissioners of the Exhibition of 1851 have on eight occasions awarded Scholarships to Graduates in Science of this University, upon the nomination of the Senate. £150 for two or three years. (See page 219.)

The MACLEAY Fellowships—Awarded by the Linnean Society of New South Wales to graduates in Science. £400 per annum. (See page 210.)

AWARDED IN THE FACULTY OF LAW.

The WIGRAM ALLEN Scholarship—Awarded for proficiency in the subjects of Section I. of the Intermediate LL.B. Examination. £50 for one year. (See page 215.)

The GEORGE and MATILDA HARRIS Scholarship—Awarded for proficiency in the subjects of Section II. of the Intermediate LL.B. Examination. £50 for one year. (See page 222.)

AWARDED IN THE FACULTY OF MEDICINE.

The STRUTH Exhibition—For proficiency in the subjects of the First Year Examination in Arts, to a student entering the Faculty of Medicine. £50 for five years. (See page 227.) The last award was made in March, 1902.

The HENRY WAIT Bursary—For proficiency in the subjects of the First Year Examination in Arts to a student entering the Faculty of Medicine. £40 for five years. (See page 233.) The last award was made in March, 1906.

The RENWICK Scholarship—For proficiency in the subjects of the First Year Examination in Medicine. £45 for one year. (See page 216.)

The JOHN HARRIS Scholarship—For proficiency in the subjects of Anatomy and Physiology in the Third Year Examination in Medicine. £40 for one year. (See page 218.)

The BELMORE Medal. A Gold Medal of the value of £15, awarded annually for proficiency in Geology and Practical Chemistry, with special reference to Agriculture. (See page 235.)

1. Candidates must be of two, and under five years' standing in the University of Sydney.
2. They must pass examinations in Chemistry and Geology, with special reference to Agriculture.

*PRIZE COMPOSITIONS.

WENTWORTH Medal for Graduates—£10. Awarded annually for an English Essay. The competition for this Medal is confined to Bachelors of Arts of not more than three years' standing. (See page 234.)

Subject for 1906-7.—"The History of Literature; its Aims, Problems and Methods."

WENTWORTH Medal for Undergraduates — £10. Awarded annually for an English Essay. (See page 234.)

Subject for 1906-7.—"The History of Literature; its Aims, Problems and Methods."

NICHOLSON Medal—£10. Awarded annually for Latin Verse (Hexameters). The competition for this Medal is open to all Undergraduates and to Bachelors of Arts of not more than two years' standing. (See page 235.)

Subject for 1906-7.—"*Galba occisus.*"

UNIVERSITY Prize—£10. Awarded annually for English Verse (to be written in rhyme). The competition for this Medal is open to all Undergraduates and to Bachelors of Arts of not more than three years' standing. The composition must be at least one hundred lines in length.

Subject for 1906-7.—"The Earthquake at San Francisco."

Professor ANDERSON'S Medal—£10. Awarded annually for an Essay on some Philosophical subject. The competition for this Medal is open to all Bachelors of Arts of not more than two years' standing.

Subject for 1906-7.—"The Theory of Psycho-Physical Parallelism."

The BEAUCHAMP Prize—£25. Awarded for an Essay upon some subject of literary or historical interest. The competition is open to all Undergraduates and Graduates of not more than twenty-five Terms' standing from Matriculation. (See page 237.)

Subject for 1906-7.—"The Referendum in Australia; a Study in Constitutional Law and Practical Politics."

Subject for 1907-8.—"The Problem of the Indigent Poor and the Unemployed of New South Wales, considered in the light of the experience of other countries and the conditions prevailing in this State."

* The exercises for these Prizes, which must not be in the hand writing of the author must be sent to the Registrar before the first day of Lent Term, 1907. They must be contained in an envelope with a motto, and be accompanied by a sealed letter containing the name and motto of the author.

TABLE OF FEES.

	£	s.	d.
MATRICULATION EXAMINATION	2	0	0
ENTRANCE EXAMINATION FOR LAW, MEDICINE AND SCIENCE	2	0	0
LECTURE FEES, *per term*—			
ANATOMY, DISSECTIONS (including material)..	3	3	0
ANATOMY OF TEETH	1	1	0
ANATOMY, GENERAL AND DESCRIPTIVE ..	3	3	0
ANATOMY, REGIONAL AND SURGICAL ..	3	3	0
APPLIED MECHANICS	2	2	0
ARCHITECTURE AND BUILDING CONSTRUCTION	2	2	0
ASSAYING (*see Practical Chemistry*)			
BACTERIOLOGY, SPECIAL	4	4	0
BIOLOGY	2	2	0
BIOLOGY, PRACTICAL	2	2	0
BOTANY	2	2	0
BUILDING CONSTRUCTION (*see Architecture*)			
CHEMISTRY, INTRODUCTORY COURSE FOR STUDENTS IN THE FACULTY OF ARTS	2	2	0
CHEMISTRY, ALL OTHER COURSES	3	3	0
CHEMISTRY, PRACTICAL*	5	5	0
CHEMISTRY, TUTORIAL	1	1	0
CIVIL ENGINEERING	2	2	0
DENTISTRY, MECHANICAL WORKSHOP ..	2	2	0
,, MECHANICAL	2	2	0
,, SURGICAL	2	2	0
DESCRIPTIVE GEOMETRY AND DRAWING ..	1	11	6
ENGINEERING, PRACTICAL, FIRST YEAR ..	†1	1	0
,, SECOND YEAR (CIVIL AND MINING AND METALLURGY) ..	†2	2	0

* For Students who have passed through the Introductory course the following is the Table of Fees; two half-days being counted as one day—

For 6 days in the week,	£5 per month,				or £12 per term.	
,, 5	,,	,,	£4 5s.	,,	£10	,,
,, 4	,,	,,	£3 6s. 8d.	,,	£8	,,
,, 3	,,	,,	£2 10s.	,,	£6	,,
,, 2	,,	,,	£2	,,	£4	,,
,, 1	,,	,,	£1	,,	£2	,,

For Year.

LECTURE FEES *per term—continued—*	£	s.	d.
ENGINEERING, THIRD YEAR (MECHANICAL AND ELECTRICAL)	*2	2	0
ENGLISH, FIRST YEAR	0	10	6
ENGLISH, SECOND AND THIRD YEARS ..	2	2	0
FRENCH	2	2	0
GEOLOGY	2	2	0
GEOLOGY, PRACTICAL	3	3	0
GERMAN	2	2	0
GREEK	2	2	0
GYNÆCOLOGY	3	3	0
HISTORY	2	2	0
LATIN	2	2	0
LAW†—THIRD YEAR	4	4	0
FOURTH AND FIFTH YEARS ..	8	8	0
LOGIC AND MENTAL PHILOSOPHY	2	2	0
LOGIC, APPLIED (FOR MEDICAL STUDENTS) ..	1	1	0
MATERIA MEDICA AND THERAPEUTICS ..	3	3	0
MATHEMATICS	2	2	0
MECHANICAL DRAWING	2	2	0
MECHANICAL ENGINEERING	2	2	0
MEDICAL JURISPRUDENCE AND PUBLIC HEALTH	3	3	0
MEDICINE	3	3	0
MEDICINE, CLINICAL	2	2	0
MEDICINE, TUTORIAL	*1	1	0
METALLURGY	2	2	0
METALLURGY, PRACTICAL, FOR DENTISTS ..	3	3	0
MIDWIFERY	3	3	0
MINERALOGY	2	2	0
MINERALOGY, PRACTICAL	2	2	0
MINING	2	2	0
OPHTHALMIC MEDICINE AND SURGERY ..	1	1	0
PATHOLOGY	3	3	0
PATHOLOGY, PRACTICAL	4	4	0
PHARMACOLOGY	3	3	0
PHYSICS, INTRODUCTORY COURSE FOR STUDENTS IN THE FACULTY OF ARTS	2	2	0
PHYSICS, ALL OTHER COURSES	3	3	0
PHYSICS, PRACTICAL	3	3	0
PHYSIOGRAPHY	2	2	0

* For Year. † In the Faculty of Law a total of sixty guineas is payable for the course of lectures for the LL.B. degree. The fee payable by Students not going through the regular course is two guineas per Term for each subject.

	£	s.	d.
LECTURE FEES *per term—continued.*			
PHYSIOLOGY	3	3	0
PHYSIOLOGY, PRACTICAL	3	3	0
POSOLOGY, ETC.	1	1	0
PSYCHOLOGICAL MEDICINE	1	1	0
PUBLIC HEALTH	3	3	0
QUANTITATIVE ANALYSIS (*see Practical Chemistry*)			
SURGERY	3	3	0
SURGERY, CLINICAL	2	2	0
SURGERY, OPERATIVE	4	4	0
SURGERY, TUTORIAL	* 1	1	0
SURVEYING	2	2	0
ZOOLOGY	2	2	0
DEGREE FEES—			
B.A.	3	0	0
M.A.	5	0	0
LL.B.	10	0	0
LL.D.	10	0	0
M.B.	10	0	0
M.D.	10	0	0
Ch.M.	10	0	0
B.Sc.	3	0	0
D.Sc.	10	0	0
B.E.	10	0	0
M.E.	10	0	0
B.D.S.	10	0	0
Fee for use of Microscope *(per course)*	1	0	0
,, ,, in Geological Department	1	10	0
Fee for entering name on books, to be paid by those who are admitted *ad eundem statum* or *gradum*	2	0	0
YEARLY EXAMINATION FEE for students who have been exempted from attendance upon lectures	2	0	0
Fee payable for a deferred examination † ..	2	0	0
P. N. RUSSELL SCHOLARSHIP EXAMINATION ..	1	10	0
PUBLIC EXAMINATION FEES—			
SENIOR EXAMINATION..	1	10	0
JUNIOR ,, ...	1	0	0
LATE FEE FOR ENTRIES FOR ALL EXAMINATIONS ..	0	10	0
PRELIMINARY EXAMINATION FOR ARTICLED CLERKS (payable to the Prothonotary)	5	10	6

* For Year. † For fees for deferred Degree Examinations, see By-laws.

TABLE OF FEES SHOWING THE TOTAL COST OF GRADUATION IN MEDICINE.

	£	s.	d.	£	s.	d.
1st Year—						
Chemistry	6	6	0			
Practical Chemistry	6	5	0			
Physics	6	6	0			
Practical Physics	3	3	0			
Biology	4	4	0			
Practical Biology*	4	4	0			
Practical Histology*	3	3	0			
Introductory Anatomy	3	3	0			
				36	14	0
2nd Year—						
Descriptive Anatomy	6	6	0			
Physiology	6	6	0			
Practical Physiology*	3	3	0			
Physiological Chemistry	3	3	0			
Applied Logic	1	1	0			
Dissections and material	9	9	0			
Chemistry—Organic	3	3	0			
				32	11	0
3rd Year—						
Regional and Surgical Anatomy	5	5	0			
Physiology (Senior)	3	3	0			
Pharmacology	3	3	0			
Dissections and material	9	9	0			
General Pathology	3	3	0			
Practical Pathology*	4	4	0			
Tutorial Surgery	1	1	0			
				29	8	0
4th Year—						
Surgery	6	6	0			
Pathology	3	3	0			
Operative Surgery	4	4	0			
Clinical Surgery	4	4	0			
Tutorial Surgery	1	1	0			
Medicine	3	3	0			
Midwifery	3	3	0			
				25	4	0
Carried forward				£123	17	0

* To those students who use the University Microscope a fee of £1 for each course is charged.

TABLE OF FEES SHOWING THE TOTAL COST OF GRADUATION IN MEDICINE—*continued.*

	£	s.	d.	£	s.	d.
Brought forward ..				£123	17	0
5th Year—						
Medicine	3	3	0			
Medical Jurisprudence and Public Health ..	3	3	0			
Clinical Medicine	4	4	0			
Ophthalmic Medicine and Surgery	1	1	0			
Psychological Medicine	1	1	0			
Tutorial Medicine	1	1	0			
Gynæcology	3	3	0			
Posology and Prescription Writing	1	1	0			
*Two of the undermentioned elective courses, say	5	5	0			
				23	2	0
Total Lecture Fees..				£146	19	0
Matriculation Fee	2	0	0			
Fee for M.B. Degree	10	0	0			
				12	0	0
Total Fees payable to University				£158	19	0
Perpetual Attendance at the Royal Prince Alfred Hospital	10	10	0			
Practical Midwifery	5	5	0			
Practical Pharmacy	3	3	0			
Fees payable to Hospitals				18	18	0
Total Cost of Education and Graduation as M.B.				£177	17	0

* Special Bacteriology (Microscope fee, £1 additional) £4 4 0
Special Therapeutics 1 1 0
Diseases of Children 1 1 0
Diseases of the Skin 1 1 0
Diseases of the Ear, Nose and Throat 1 1 0

TABLE OF FEES SHOWING THE TOTAL COST FOR GRADUATION IN DENTISTRY.

	£	s.	d.	£	s.	d.
1st Year—						
Descriptive Anatomy	3	3	0			
Anatomy of Teeth	1	1	0			
Dissections (including Material)	6	6	0			
*Practical Histology	3	3	0			
Chemistry—Introductory	3	3	0			
,, Metals	3	3	0			
,, Practical	5	5	0			
Practical Metallurgy	3	3	0			
Physics	6	6	0			
Practical Physics	3	3	0			
Mechanical Workshop	6	6	0			
				44	2	0
2nd Year—						
Regional Anatomy	2	12	6			
Dissections (including Material)	6	6	0			
Physiology	6	6	0			
,, (Practical)*	3	3	0			
Mechanical Dentistry	4	4	0			
Surgical Dentistry	4	4	0			
Mechanical Workshop	6	6	0			
†Hospital Fee, £7 7s.						
				33	1	6
3rd Year—						
Physiology	3	3	0			
General Pathology and Bacteriology ..	3	3	0			
Practical Pathology*	4	4	0			
Materia Medica and Therapeutics ..	3	3	0			
Mechanical Dentistry	4	4	0			
Surgical Dentistry	4	4	0			
Mechanical Workshop	6	6	0			
†Hospital Fee, £7 7s.						
				28	7	0
4th Year—						
Surgery and Dental Surgery	3	3	0			
Anæsthetics	1	1	0			
Clinical Medicine	3	3	0			
Clinical Surgery	3	3	0			
Special Dental Clinics	3	3	0			
†Hospital Fee, £7 7s.						
				13	13	0
Matriculation Fee	2	0	0			
Degree Fee	10	0	0			
				12	0	0
				£131	3	6

* To those students who use the University Microscope a fee of £1 for each course is charged.
†Fees payable to Dental Hospital.

Table of Fees showing the Total Cost of Graduation in the Department of Engineering.

		Civil.	Mining and Metallurgy.	Mechanical and Electrical.
		£ s. d.	£ s. d.	£ s. d.
First Year—				
Mathematics		6 6 0	6 6 0	6 6 0
Applied Mechanics		2 2 0	2 2 0	2 2 0
Chemistry—Inorganic		6 6 0	6 6 0	6 6 0
Practical Chemistry		8 5 0	8 5 0	8 5 0
Physics and Practical Physics		9 9 0	9 9 0	9 9 0
Descriptive Geometry		3 3 0	3 3 0	3 3 0
Engineering Drawing		6 6 0	6 6 0	6 6 0
Practical Engineering		1 1 0	1 1 0	1 1 0
		£42 18 0	£42 18 0	£42 18 0
Second Year—				
Mathematics		6 6 0	.....	6 6 0
Physics II. and Practical Physics		12 12 0	9 9 0	12 12 0
Surveying I.		4 4 0	.....	4 4 0
Mechanical Engineering I. and Practical		6 6 0	4 4 0	6 6 0
Civil Engineering I.		2 2 0	2 2 0	2 2 0
Engineering Drawing and Design		6 6 0	3 3 0	6 6 0
Workshop Practice		.....	.....	6 6 0
Geology I. and Practical Geology*		.....	6 6 0	.....
Practical Chemistry		.....	11 0 0	.....
		£37 16 0	£36 4 0	£44 2 0
Third Year—				
Mathematics		.....	.....	4 4 0
Civil Engineering II.		6 6 0	.....	2 2 0
Civil Engineering III.		4 4 0	2 2 0	2 2 0
Mechanical Engineering II.		.....	3 3 0	6 6 0
Geology and Practical Geology*		6 6 0	6 6 0	.....
Surveying		2 2 0	4 4 0	.....
Architecture and Building Construction		2 2 0	1 1 0	.....
Engineering Drawing and Design		6 6 0	6 6 0	4 4 0
Engineering Laboratory		6 6 0	2 2 0	2 2 0
Mineralogy		.....	4 4 0	.....
Practical Metallurgy and Assaying		.....	4 0 0	.....
Practical Chemistry		.....	.....	2 0 0
Electrical Engineering I.		.....	2 2 0	4 4 0
Electrical Engineering Laboratory		.....	2 2 0	2 2 0
		£33 12 0	£37 12 0	£29 6 0
Fourth Year—				
Mining		.....	4 4 0	.....
Metallurgy		.....	4 4 0	.....
Practical Metallurgy and Assaying		.....	21 0 0	.....
Mining and Metallurgical Design		.....	3 3 0	.....
Mechanical and Electrical Design		.....	.....	6 6 0
Electrical Engineering II.		.....	.....	6 6 0
Mechanical Engineering III.		.....	.....	4 4 0
Electrical Engineering Laboratory		.....	.....	9 9 0
			£32 11 0	£26 5 0
Matriculation Fee	£2 0 0	.....	.....	.....
Fee for B.E. Degree	10 0 0	12 0 0	12 0 0	12 0 0
Total cost for Degree of B.E.—				
Civil Engineering		£126 6 0	.....	.....
Mining and Metallurgy		.....	£161 5 0	.....
Mechanical and Electrical		.....	.....	£154 11 0

* To those students who use the University Microscope a fee of £1 10s. for each course is charged.

MICROSCOPES.

In the Practical Courses of Biology*, Physiology, Pathology, and Bacteriology, students may use the microscopes provided by the University, for the use of which a charge is made. But they are strongly recommended to purchase for themselves microscopes of an approved pattern, and to use them throughout their course. A microscope suitable for bacteriological work, and for the proper clinical examination of the blood, is now an essential part of the equipment of every medical man. It is, moreover, a great advantage for the student to use his own microscope during his undergraduate course, as he thus becomes familiar with its working, and is in a better position to profit by its use in after years. With the exercise of a little care the efficiency of a good microscope will not thereby be impaired.

Excellent microscopes are supplied by the English firms, Beck, Ross, Swift, and Watson; by the American firm, Bausch and Lomb; and by the Continental firms, Zeiss, Reichert, and Leitz. The student is particularly warned against the purchase of an inferior type of microscope which will not be approved by the Professors, and it is hardly necessary to point out that not every microscope made by the above-named firms is of a type that can be approved. Students are, therefore, invited to consult the Professors before making any purchase.

The following types of microscope, procurable in Sydney from agents of the manufacturers, are recommended as adequate, and at the same time moderate in price. With the accessories given they are adapted for the Practical Biology and the Practical Physiology:—

W. Watson & Sons' Edinburgh Student's Microscope, Stand "B," with $\frac{2}{3}$ and $\frac{1}{6}$ inch objectives, Nos. 2 and 4 eye-pieces, double nose-piece, and illuminating apparatus. Price, £10 12s. 6d.

Or W. Watson & Sons' Stand "C," similar to "B," but with compound rackwork substage and better illuminating apparatus, etc. £12 17s. 6d.

Bausch & Lomb's Microscope BB6, with Abbé condenser and iris diaphragm, double nose-piece, two eye-pieces, two objectives $\frac{2}{3}$ in. and $\frac{1}{6}$ in. (N.A. 0·66) etc., £11 12s.

* See also under Geology and Mineralogy on next page.

Leitz Microscope, Stand IIa, with Abbé condenser and iris diaphragm, double nose-piece, two eyepieces, III. and IV., two objectives 3 and 6, etc., £10 10s.

Reichert's "New Sydney University" Stand, with Abbé condenser and iris diaphragm, double nose-piece, two eyepieces, III. and IV., two objectives, 3 and 6, of best quality, etc., £11.

For Practical Pathology and Bacteriology, a $\frac{1}{12}$-inch oil-immersion objective is also required, and costs about £5 5s.

The microscope and its accessories should be selected, not only with a view to the immediate requirements of the student, but also with regard to his future work. Since for practitioners of Medicine microscopic work consists mainly in the examination of bacteria and of the blood, students will find it advantageous to purchase from the beginning a triple instead of a double nose-piece, and to see that the ordinary high power objective is adapted for the counting of blood cells in a Thoma-Zeiss chamber.

Department of Geology and Mineralogy.

Students may use their own microscopes in the demonstrations on Petrology, provided they are of a pattern approved by the demonstrator, to whom they must be shown beforehand. Students who wish to obtain a microscope suitable for both Biology and Geology should purchase a petrological, and not simply a biological, stand. Advice will always be willingly given to any students desiring to purchase a microscope. The microscopes in use for demonstrations are the following:—

(1) Student's Petrological Microscope, with centering stage or nose-piece, revolving double nose-piece, and two objectives, both of highest numerical aperture. The latter should be 1 inch and $\frac{1}{6}$ inch, or $1\frac{1}{2}$ inch and $\frac{1}{4}$ inch. The best combination is of three or triple nose-piece, $1\frac{1}{2}$ inch, $\frac{1}{2}$ inch, and $\frac{1}{6}$ inch. Price in London, about £15, including two objectives.

(2) The Dick Petrological Microscope, with revolving nose-piece and objectives as in (1). Price in London, about £23, including two objectives.

The above microscopes are made by Messrs. James Swift and Son, 81 Tottenham Court Road, London, W., and can be obtained in Sydney at a very slight advance upon London prices.

FOUNDATIONS.

I.

CHALLIS FUND.

In 1880, the late John Henry Challis, Esq., formerly of Sydney, bequeathed his residuary real and personal estate to the University, "to be applied for the benefit of that Institution in such manner as the governing body thereof shall direct." The bequest was subject to a tenure until death or re-marriage on the part of his widow, and to the payment of various annuities, and also to a period of five years' accumulation after such death or re-marriage. By the death of the widow, in September, 1884, the University became entitled to the accumulated property in September, 1889. The assets are invested partly in England and partly in New South Wales, and all the specific bequests have been paid.

The assets in England, amounting to £30,000, were retained by the Trustees until the expiration of certain annuities in 1905. Those in Australia amount to £245,200.

By a resolution of the Senate passed in 1885, it was determined that the Challis Fund should be applied as a permanent provision of income for educational uses.

From the income of the Fund a sum of £7,500 was applied for the payment of half the cost of the erection of a new Chemical Laboratory, and a further sum of £1,200 devoted to the erection of a marble statue of Mr. Challis, which has been placed in the Great Hall opposite to that of Mr. W. C. Wentworth.

The income arising from the Australian assets is now devoted to the maintenance of seven Challis Professorships in the following subjects, viz., Anatomy, Biology, Engineering, History, Law, Logic and Mental Philosophy and Modern Literature; and four Challis Lectureships in Law.

CHALLIS PROFESSORSHIPS.

Anatomy, 1890—James T. Wilson, M.B., Ch.M. (Edin.)
Biology, 1890—William A. Haswell, M.A., D.Sc. (Edin.)

Engineering, 1890—William H. Warren, M.Inst.C.E.

Law, 1890—Pitt Cobbett, M.A., D.C.L. (Univ. Coll., Oxon.)

Logic and Mental Philosophy, 1890—Francis Anderson, M.A. (Glasg.)

Modern Literature, 1890—Mungo W. MacCallum, M.A. (Glasg.)

History, 1891—G. Arnold Wood, M.A. (Oxon.)

CHALLIS LECTURESHIPS.

Equity, Probate, Bankruptcy, and Company Law, 1890—G. E. Rich, M.A.

The Law of Status, Civil Obligations and Crimes, 1890—F. Leverrier, B.A., B.Sc.

Law of Procedure in Civil and Criminal Cases, Evidence and Pleading, 1901—David Ferguson, B.A.

Law of Property, 1903—J. B. Peden, B.A., LL.B.

II.

THE PETER NICOL RUSSELL ENDOWMENT FOR THE DEPARTMENT OF ENGINEERING.

In 1896 the late Sir Peter Nicol Russell, of London (formerly of Sydney), presented to the University a sum of £50,000 for the endowment of the Department of Engineering. In 1904 he gave a second sum of £50,000, making £100,000 in all.

The second gift was made as an extension of the first endowment, with an additional obligation for the establishment of efficient teaching in electrical engineering, and for the foundation of two additional P. N. Russell Scholarships, to be offered for competition every year, similar to those already established under the first endowment.

In making the second endowment, Sir Peter Russell stipulated that the Government of New South Wales should undertake to hand to the University, within three years, a sum of £25,000 for the purpose of providing an extension of the buildings required for the purposes of the School of Engineering or for new buildings; and this the Government has agreed to do.

The conditions of the gifts are the following :—

1. That the Department of Engineering at present existing in the University, together with such additions as may be made thereto, shall be called the Peter Nicol Russell School of Engineering.
2. That the University shall, out of the income to be derived from the endowments afford both practical and theoretical teaching in the following subjects, in so far as such subjects relate to the School of Engineering—viz., Mechanical Engineering, Electrical Engineering, Surveying, Mining, Metallurgy, Architecture, and such further instruction as the Senate of the University may deem necessary to give effect to the intention of Sir Peter Russell in connection with the P. N. Russell School of Engineering.
3. That the University shall apply the income of the Fund in the maintenance of the P. N. Russell School of Engineering, but shall not charge such income with any proportion of the cost of the existing buildings, nor with the expense or any proportion thereof of service by ordinary attendants, nor with the expense or any proportion thereof of the Professorships of Mathematics, Chemistry, Physics, Geology, or the Challis Chair of Engineering.
4. That the University shall offer for competition in each year three Peter Nicol Russell Scholarships, the conditions of which are given below.

Other conditions of the Deeds of Gift relate to the mode of investment of the principal sum, and provide that any unused surplus of income shall be added to the principal sum and invested as if it formed a part of the original donation.

The following offices have been established from the Peter Nicol Russell foundations :—

Lecturer in Mechanical Engineering, 1897—S. Henry Barraclough, B.E. (Sydney), M.M.E. (Cornell), Assoc. M. Inst. C.E.

Lecturer in Surveying, 1890—George H. Knibbs, L.S., F.R.A.S.

Lecturer in Mining, 1892-1902 — E. F. Pittman, A.R.S.M.; 1903—F. Danvers Power, F.G.S.

Lecturer in Metallurgy, 1899—Basil W. Turner, A.R.S.M.

Lecturer in Architecture, 1887—John Sulman, F.R.I.B.A.

Lecturer in Electrical Engineering, 1905—Ernest Kilburn Scott, A.M.I.C.E., M.I.E.E.

Demonstrator in Engineering and Drawing, 1903—Alexander J. Gibson.

Junior Demonstrators in Engineering—Electrical—P. L. Weston, B.Sc., B.E.; Civil—A. M. Martyn, B.E.; Mechanical—L. R. Woodcock, B.E.

Mechanical Instructors—Henry Blay, Robert Hay.

PETER NICOL RUSSELL SCHOLARSHIPS FOR MECHANICAL ENGINEERING.

Under the gift of Sir Peter Nicol Russell, for the Endowment of the School of Engineering at the University, three Scholarships are offered annually, for the encouragement of higher education in Mechanical Engineering, under the following conditions:—

1. Every candidate must present evidence that he has satisfied one of the three following conditions:—

(A) That he has been engaged in an approved workshop for a period of at least one year, and has, in addition, obtained certificates of having attended the following courses in the Sydney Technical College, and passed the necessary Examinations in the same:—Applied Mechanics, First and Second Year Courses; Mechanical Drawing, First and Second Year Courses; Mechanical Workshops, a two years' Course; or,

(B) That he has been engaged, under approved conditions, in the study of practical Mechanical Engineering for at least *two* years, by apprenticeship or service in a mechanical workshop or drawing office, provided that one year at least shall have been spent in a workshop; or,

(C) That he has been in attendance upon the day classes of the Sydney Technical College in the Department of Mechanical Engineering or the Department of Electrical Engineering for a period of three years, and has obtained the College diploma in one of those departments.

2.—The Scholarships will be awarded, after competitive Examination held in the month of March, and the holders will be styled "Peter Nicol Russell Scholars."

3.—The subjects of Examination will be the following:—

(*a*) Applied Mechanics (250 marks).
(*b*) Mechanical Drawing (250 marks).
*(*c*) Algebra, including Arithmetic (150 marks).
*(*d*) Geometry, including Mensuration (150 marks).
*(*e*) Plane Trigonometry (150 marks).
*(*f*) Mechanics (150 marks).
(*g*) Geometrical Drawing and Perspective (100 marks).

Optional subjects (as in the Matriculation Examination, Division B), two may be taken—

(*a*) English (150 marks).
(*b*) Chemistry (150 marks).
(*c*) Physics I., Properties of Matter, Sound, Heat and Light (150 marks).
(*d*) French (150 marks).
(*e*) German (150 marks).
(*f*) Latin (150 marks).
(*g*) Greek (150 marks).

Candidates must attain a certain standard in each of the compulsory subjects. They will be allowed to take two, but not more than two of the optional subjects, and in these they must also attain the prescribed standard.

Subject to this provision, the Scholarships will be awarded to the candidates who obtain the highest aggregate number of marks in this Examination, provided that they shall have shown sufficient merit to enable them, in the opinion of the Examiners, to profit by the award of a Scholarship.

4.—The scholar will be required to commence attendance forthwith upon the University First Year Classes in the Department of Mechanical and Electrical Engineering, and he can only continue to hold the Scholarship so long as he shall be of good conduct, and shall attend regularly the courses prescribed in

* As defined in the regulations for the Matriculation Examination, Division B.

the University for candidates for the Degree of Bachelor of Engineering in the Department of Mechanical and Electrical Engineering, and shall pass all the prescribed Examinations.

5.—Each Scholarship will be of the value of £75 per annum, and will be tenable for four years, under the conditions mentioned in the preceding paragraph. The payments will be quarterly, commencing on the first of April after the student commences his University course.

6.—Those scholars who have, before entering upon their University course, qualified themselves for admission to the Department of Engineering by passing the Examination prescribed for that purpose, or who have in the Peter Nicol Russell Scholarship Examination passed in (i.) Latin and (ii.) Greek, or French or German,* will be entitled, after completing the course, to the Degree of Bachelor of Engineering in Mechanical and Electrical Engineering.

Those who have not so qualified themselves beforehand will be entitled to certificates of their attendance and examination in individual subjects, and a certificate showing that they have held the Peter Nicol Russell Scholarship, under the prescribed conditions, for a period of four years—but not to any Degree.

The candidates' names, together with an examination fee of one pound ten shillings (£1 10s.), and all the required certificates, must be in the hands of the Registrar on the day set down in the University Calendar as the last day for receiving entries for the University Examinations in March.

1900—Vine-Hall, Roger
1901—Morris, L. C.
1902—Bellemey, S. J.
1903—Norman, J. L.
1904—Power, R.
Swain, H. J.
1905—Carleton, G. B.
Ada, W. L.
Ranclaud, A. B. B.
1906—Norman, E. P.
McKeown, E. W.
Lloyd, A. S.

THE PETER NICOL RUSSELL MEDAL.

THE PETER NICOL RUSSELL MEDAL (value £20) is open to competition amongst Graduates in Engineering of not less than one nor more than three years' standing at the time of award. It is intended to encourage post graduate study. Candidates are required to prepare and submit a thesis upon some subject connected with the studies in the Department of Engineering, under the regulations in force for the time being.

* From March, 1907, English will also be required. See regulations for Matriculation Examination.

Candidates are required to hand in their theses to the Registrar not later than the first day of Lent Term. The subjects for the thesis are confined to the following :—

I. Civil Engineering, including Engineering Construction in Iron, Steel, Timber, Masonry, and Concrete.

II. Hydraulic and Sanitary Engineering.

III. Railway Engineering, including Railway Location, Permanent Way, Locomotives and Rolling Stock and Railway Appliances.

IV. Mechanical Engineering.

V. Machinery, Mining and Ore Dressing, Machinery Appliances.

VI. The Smelting of Copper and Lead.

VII. The Wet Processes for the Extraction of Gold and Silver.

VIII. Coke and its by-products.

1901—Madsen, J. P. V., B.Sc.
1903—Boyd, A., B.Sc., B.E.
1905—Weston, P. L., B.E., B.Sc.

III.

LECTURESHIPS.

1—WILLIAM HILTON HOVELL LECTURESHIP ON GEOLOGY AND PHYSICAL GEOGRAPHY.

In 1877, certain tenements and land situated in the city of Goulburn were bequeathed by the widow of the late William Hilton Hovell, Esq., of that district, for the endowment of a Professorship or Lectureship in Geology and Physical Geography, in honour of her late husband. The present estimated value of the property is £6000.

1877.—Archibald Liversidge (Christ's College, Cambridge).

1882.—William John Stephens, M.A. (Queen's College, Oxford).

1891.—T. W. Edgeworth David, B.A. (New College, Oxford).

IV.

FELLOWSHIPS.

1.—WENTWORTH TRAVELLING FELLOWSHIP.

In 1862, the sum of £445 was given by W. C. Wentworth, Esq., to be invested and allowed to accumulate until it should reach an amount which, in the opinion of the Senate, would be sufficient for the foundation of a Travelling Fellowship, to be awarded upon certain specified conditions. The fund in December, 1905, was £2699 2s. 8d.

2.—MACLEAY FELLOWSHIPS.

Founded in 1904 by a bequest of £35,000 from the Hon. Sir William Macleay to the Linnean Society of New South Wales.

The will provides for the foundation of four Fellowships, each of the annual value of £400 per annum. They are to be awarded by the Council of the Linnean Society of New South Wales to graduates in Science of the University of Sydney.

"The Fellowships are intended to encourage and advance research in Natural Science, by enabling those who wish to continue their studies at the University, or elsewhere, after having completed the regular curriculum and taken a Science Degree, to do so."

The following regulations, which have been framed by the Council of the Linnean Society of New South Wales, govern the award of the Fellowship :—

1. Applications by qualified persons desiring to hold these Fellowships must be made in writing at such times as may be prescribed by the Council.

2. Every Candidate for a Fellowship must be a Member of the Linnean Society of New South Wales; and must have taken the degree of Bachelor of Science or Doctor of Science in the University of Sydney.

3. He must produce—

(*a*) Satisfactory evidence of his qualification for undertaking original investigation; and in his application he should indicate the course of his previous reading and study, and his general purposes with reference to future work.

(*b*) A satisfactory testimonial of character and conduct, and he should give the names of two persons from whom fuller information may be sought.

4. The salary of each Fellow will be at the rate of four hundred pounds (£400) per annum, payable in quarterly instalments.
5. In case of resignation or other withdrawal from the Fellowship, payment will be made for the time during which the Fellowship may have been actually held.
6. Candidates for Fellowships are invited to apply for appointment in any one of the following eleven Branches:—(1) Animal and Vegetable Physiology and Pathology; (2) Anthropology; (3) Botany; (4) Comparative Anatomy and Embryology; (5) General Biology; (6) Geography; (7) Geology; (8) Meteorology; (9) Organic Chemistry as applied to Biology; (10) Palæontology; (11) Zoology.
7. Every Fellow on his appointment shall be required to sign a paper undertaking to observe the regulations drawn up by the Council, in accordance with the terms of Sir William Macleay's will, for his guidance during his tenure of the Fellowship.
8. No Fellow shall be permitted to occupy any salaried position or undertake any employment for payment during his Fellowship, nor shall he, without the special sanction of the Council, take fees for teaching any pupil either publicly or privately.
9. The Fellow shall be required to devote his time to research in the branch of Natural Science which he shall have specified in his letter of application for the Fellowship.
10. He shall be required to furnish a report on the progress of his investigations quarterly to the Council.
11. When he shall have completed for publication any paper embodying the results of his researches, he shall at once submit the same to the Council.
12. He shall not publish, nor permit to be published, any paper embodying the results of his research otherwise than under the authority of the said Council.
13. He may carry on his investigations in one of the Laboratories of the University of Sydney, or elsewhere, subject to the approval of the Council. In the former case, he must undertake to conform to the Regulations for Research Students drawn up by the University.
14. Every Fellow must reside in New South Wales.
15. The Society does not undertake to furnish any Fellow with working accommodation, material, or apparatus.
16. Every Fellow shall be allowed an annual vacation, the conditions and length of which shall be determined from time to time by the Council.
17. Each Fellowship is tenable for one year only; but a Fellow will be eligible for re-appointment from year to year, provided that the Council is satisfied with his work.
18. A Fellow, if he desire to be re-appointed, shall apply in writing to the Council at least three months before the termination of his year of tenure.

19. Should any dispute arise between a Fellow and the Council of the Linnean Society of New South Wales on the subject of his Fellowship, his employment, or his tenure of office, the decision of the Council shall be final and conclusive, without appeal.

20. Any holder of a Linnean Macleay Fellowship who shall endeavour to anticipate his income from the Fellowship, otherwise than by direct application to the Council, and with its concurrence, or who shall during his enjoyment of the Fellowship commit any act of bankruptcy, shall render himself liable to immediate dismissal from his appointment as Fellow without any notice whatever.

NOTE.—Women who are qualified in respect of Regulations Nos. 2 and 3 are eligible as Candidates, and accordingly the foregoing Regulations may be understood as equally applicable to female Candidates or Fellows.

V.

CURATORSHIP OF MACLEAY MUSEUM.

In 1888, the sum of £6000 was given to the Senate by the Hon. Sir William Macleay, M.L.C., to provide for the services of a Curator for the collections in Natural History which he had presented to the University. The present Curator, nominated by Sir William Macleay, is

1888—George Masters.

VI.

* SCHOLARSHIPS.

Awarded only when candidates exhibit a degree of proficiency satisfactory to the Examiners. No Undergraduate may hold more than two Scholarships at one time. Scholars are required to proceed with their studies in the respective Faculties in which their Scholarships are awarded.

1—LEVEY SCHOLARSHIP.

Founded by Solomon Levey, Esq., by a gift of £500 (with accumulations), as an endowment for the education of orphan boys in the Sydney College. In 1853 the fund was transferred to the University of Sydney as an endowment for a Scholarship. Up to 1878 this Scholarship was awarded for general proficiency at the Matriculation Examination.

* The names of holders of Scholarships before the year 1896 will be found in the University Calendar for 1900.

It is now awarded at the First Year Examination for proficiency in Chemistry and Physics, both theoretical and practical, to a student in the Faculty of Arts or in the Faculty of Science. It shall not be awarded more than once to the same student. It is tenable for one year, and is of the annual value of £40.

1897—Harker, G.
1898—Madsen, John P. V.
1899—Boyd, W. S. } æq.
Heden, E. C. B. }
1900—Whitfeld, H. E., B.A.
1901—Close, J. C.
1902—Saunders, G. J.
1903—Weatherburn, C. E.
1904—Atkinson, J. } æq.
Sharp, L. H. }
1905—White, C. J.
1906—Davidson, G. F. } æq.
Farran-Ridge, C. }

BARKER SCHOLARSHIPS.

Founded in 1853 by a gift of £1000 (with accumulations) from Thomas Barker, Esq., for the encouragement of Mathematical Science.

2—BARKER SCHOLARSHIP, No. I.

Awarded at the Second Year Examination for proficiency in Mathematics. £50, tenable for one year.

1897—Griffiths, F. G.
1898—Sawkins, Dansie T.
1899—Stephen, H. M.
1900—Mort, H. S.
1901—Vonwiller, O. U.
1902—Wellisch, E. M.
1903—Weatherburn, C. E.
1904—Tomlinson, G. L. } æq.
Skillman, Jessie }
1905—Lyons, R. J.
1906—Watkins, H. L.

3—BARKER SCHOLARSHIP, No. II.

Awarded at the Matriculation Examination for proficiency in Mathematics. £50, tenable for one year.

1897—Boyd, W. S.
Horn, W. R. } *prox. acc.*
Mort, H. S. }
Stephen, H. M. }
1898—Mort, Harold S.
1899—Tivey, John P. } æq.
Vonwiller, O. U. }
Smith, W., *prox. acc.*
1900—Wellisch, E. M. } æq.
Roe, R. C.† }
1901—Brearley, E. A. } æq.
Diethelm, O. A. A. }
Weatherburn, C. E. }
(*a*) 1902—Stephen, J. F.
Henderson, R. G.** } æq.
Mottershead, A. }
Paul, A. }
Tomlinson, G. L. }
1903—Lyons, R. J.
1904—Dennis, S. } æq.
Watkins, H. L. }
1905—Utz, H. S.
1906—Campbell, A. L.

† R. C. Roe did not comply with the conditions for holding a Scholarship.
** Holder of two other Scholarships. (*a*) Two Scholarships awarded.

DEAS-THOMSON SCHOLARSHIPS.

Founded in 1854 by a gift of £1000 (with accumulations) from the Honourable Sir Edward Deas-Thomson, C.B., K.C.M.G., for the encouragement of the study of Natural Science.

4—DEAS-THOMSON SCHOLARSHIP FOR PHYSICS.

Awarded at the Second Year Examination to a student in the Faculty of Arts or that of Science for proficiency in Physics. The scholar is required to attend the courses of instruction upon Physics during his tenure of the Scholarship. £50, tenable for one year.

1898—Durack, Joseph J. E.
1899—Madsen, J. P. V.
1900—Boyd, A.
1901—Vonwiller, O. U.
1902—Close, J. C.
1903—Taylor, T. G.
1904—Mason, W. H.
1905—Lusby, S. G.
1906—Not awarded

5—THE DEAS-THOMSON GEOLOGY SCHOLARSHIP.

Awarded at the Second Year Examination in the Faculty of Science. Candidates must have attended the courses of instruction on Geology (together with Biology or Chemistry) of the Second year, and the scholar is required to attend the lectures and Laboratory practice of the Third Year in Geology and Mineralogy. £50, tenable for one year.

1899—Ball, C. L. } æq.
Mort, S. R. }
1900—Heden, E. C. B., B.A. } æq.
Newman, J. M.* }
1901—Verge, John, B.A.
1902—Ward, L. K., B.A.*
Taylor, T. G.
1903—Jensen, H. I.
1904—Foxall, H. G.
1905—Atkinson, J.
1906—Hammond, W. L.

COOPER SCHOLARSHIPS.

Founded in 1857 by a gift of £1000 (with accumulations) from Sir Daniel Cooper, Bart., for the encouragement of Classical Literature.

6—COOPER SCHOLARSHIP, No. I.

Awarded at the Second Year Examination for proficiency in Classics. £50, tenable for one year.

* Did not comply with the conditions for holding the Scholarship.

1897—Evans-Jones, D. P.
1898—Teece, R. C.†
1899—Robson, R. N.
1900—Todd, F. A.
1902—Barton, W. A.
1904—Henderson, R. G. } æq.
Rogers, P. H. }
1905—MacCallum, M. L.
1906—Schleicher, B. M. J.

7--COOPER SCHOLARSHIP, No. II.

Awarded at the Matriculation Examination for proficiency in Classics. £50, tenable for one year.

1897—Robson, R. N.
Arnold, A. G. de L. } *prox.*
Bourne, Eleanor E. } *acc.*
1898—Power, Percy H.
Woodd, G. N. } *prox. acc.*
Todd, F. A. }
1899—Browne, C. S.* } æq.
Teece, R. N.† }
1900—Allen, L. H.
1901—Harris, S. H.*
1902—Henderson, R. G.
1903—Porter, W. E. T.
MacCallum, M. L., *prox. acc.*
1904—Schleicher, B. M. J.
1905—Castlehow, Stanley
1906—Fitz Herbert, R. A.

8—COOPER SCHOLARSHIP, No. III.

Awarded at the First Year Examination for proficiency in Classics. £50, tenable for one year.

1897—Teece, R. C.†
Walsh, J. J.
1898—Robson, R. N.
1899—Todd, F. A.
1901—Barton, W. A.
Allen, L. H., *prox. acc.*
1903—Henderson, R. G. } æq.
Rogers, P. H. }
1904—MacCallum, M. L.
1905—Schleicher, B. M. J.
McKeown, F. M., *prox. acc.*
1906—Castlehow, S.

9—LITHGOW SCHOLARSHIP.

Founded in 1864 by a bequest of £1000 from William Lithgow, Esq. Awarded for proficiency in French and German at the Matriculation Examination. £50, tenable for one year.

1898—Armstrong, Ina B. H.
1899—Wilshire, Hector
1900—Sproule, Margaret
1901—Armstrong, Clare A. C.
Gale, B. C. L., *prox. acc.*
1902—Stephen, J. F.†
1903—Vaughan, E. F.*
McIntosh, A. M.
1906—Turner, T. A.*
Campbell, A. L.

10—WIGRAM ALLEN SCHOLARSHIP.

Founded by gifts of £381 in 1867 (with accumulations), and £500 in 1883, from Sir George Wigram Allen, for the encouragement of the study of Law. Awarded for general proficiency in the subjects of Part I. of the Intermediate LL.B. Examination. £50, tenable for one year.

* Did not comply with the conditions for holding the Scholarship.
† Holder of two other Scholarships.

1897—Mitchell, E. M.. B.A.
1898—Dettmann, H. S., B.A.
1899—Pilcher, N. G. S., B.A.
1900—Butler, P. J., B.A. } æq.
Rutherford, G. W., B.A. }
1901—Teece, R. C., B.A.
1902—Fahey, B. F., B.A.
1903—Ferguson, J. A., B.A.
1904—Wilson, D., B.A. } æq.
Teece, R. N., B.A. }
1905—Jordan, F. R., B.A. } æq.
Real, E. T., B.A. }
1906—Spence, J., B.A. } æq.
Thompson, E. H. }

11—RENWICK SCHOLARSHIP.

Founded in 1877 by a gift of £1000 from the Hon. Sir Arthur Renwick, B.A., M.D., for the encouragement of the study of Natural Science, including Comparative Anatomy. Awarded in the Faculty of Medicine for proficiency in the subjects of the First Year Examination in Medicine. £45, tenable for one year.

1897—Macintosh, A. H.
Graham, Mabel J., *prox. acc.*
1898—Muscio, A.
1899—Dansey, St. J. W.
1900—Quaife, C.
1901—Harrison, E. S. } æq.
Leslie, J. R. }
1902—Parkinson, T. C.
1903—Shellshear, J. L.
1904—Archdall, M. } æq.
Brearley, E. A. }
1905—Sampson, G. A.
1906—Burfitt, Mary B. } æq.
Ewing, T. }

12—GEORGE ALLEN SCHOLARSHIP.

Founded in 1877 by a bequest of £1000 from the Hon. George Allen. Awarded at the First Year Examination for proficiency in Mathematics. £40, tenable for one year.

1897—Hawken, R. W. } æq.
Morris, J. F.
Sawkins, D. T.
Page, E. C. G.*
1893—Boyd, W. S.
1899—Mort, H. S.
1900—Vonwiller, O. U.
1901—Wellisch, E. M.
1902—Weatherburn, C. E.
1903—Mottershead, A.
1904—Lyons, R. J.
1905—Watkins, H. L.
1906—Utz, H. S.

13—BOWMAN-CAMERON SCHOLARSHIP.

Founded in 1877, by a bequest of £1100 from Andrew Robertson Cameron, Esq., M.D. Awarded every third year for general proficiency at the Matriculation Examination. £50, tenable for three years in the Faculty of Arts.

1896—Teece, R. C.
1899—Browne, C. S.* } æq.
Teece, R. N. }
Wilshire, H., *prox. acc.*
1902—Stephen, J. F.†*
Henderson, R. G.
1905—Castlehow, Stanley

* Did not comply with the conditions for holding the Scholarship.
† Holder of two other Scholarships.

14—FREEMASONS' SCHOLARSHIP.

Founded in 1880, by a gift of £1000 from the Freemasons of New South Wales under the Constitution of the Grand Lodge of England, for the endowment of a Scholarship in honour of the District Grand Master of the Order, John Williams, Esq. Awarded for general proficiency at the Matriculation Examination. Competitors must be the sons of Freemasons of five years, standing of the United Grand Lodge of New South Wales. If at any time there shall be no candidates for Matriculation eligible to compete for the Scholarship, or if any such candidates fail to show sufficient merit, it will be open to like competition at the First Year Examination. The Scholarship may be held in any Faculty. £50, tenable for three years, provided that the scholar shall so long faithfully pursue his studies in the University, and shall pass the Annual Examinations with credit. Applications for permission to compete for the Scholarship will be received not later than the last day for receiving entries for the Examination for Matriculation Honours and Scholarships.

1896—Teece, R. C.
1899—Teece, R. N.
1902—Stephen, J. F.
1905—Utz, H. S.

15—CAIRD SCHOLARSHIP.

Founded in 1886, by a gift of £1000 from George S. Caird, Esq., for the encouragement of the study of Chemistry, Awarded at the Second Year Examination in the Faculty of Science, for proficiency in Chemistry. The Scholar is required to attend the theoretical and practical courses of instruction in Chemistry during the Third Year of the Faculty of Science. If there should be no suitable candidate at the Second Year Examination, the Scholarship may be awarded at the Third Year Examination, the holder being required to devote himself to research work in the Chemical Laboratory during his first post graduate year. £50, tenable for one year.

1898—Harker, George
1900—Heden, E. C. B., B.A.
1903—Jensen, H. I.
1904—Petrie, J. M., B.Sc.‡
Gray, G. J., B.E.
1905—Priestley, H.
1906—White, C. J.

16—AITKEN SCHOLARSHIP

Founded in 1878 by a bequest of £1000 from James Aitken, Esq., of Grafton, for a Bursary or Scholarship. Up to 1893 it

‡ Special award; Research Scholarship for 1904, £100.

was applied as a Bursary. It is now awarded as a Scholarship for general proficiency at the Matriculation Examination in the years in which the Bowman-Cameron Scholarship is not awarded. £50, tenable for one year in any Faculty.

1897—Horn, W. R.
Bourne, Eleanor E., *prox acc.*
1898—Todd, Frederick A.
1900—Wellisch, E. M.
Roe, R. C., *prox. acc.*
1901—Diethelm, O. A. A.
1903—Porter, W. E. T.
1904—Sampson, G. A.
1906—Campbell, A. L.* } æq.
Turner, T. A. }

17—JAMES KING OF IRRAWANG TRAVELLING SCHOLARSHIP.

Founded in 1888 by a bequest of £4000 from William Roberts, Esq., of Penrith, for the foundation of a Scholarship or Scholarships, in memory of the late James King, of Irrawang, near Raymond Terrace. By the terms of the will, the choice of competitors and the decision of their respective merits are vested in the Senate, acting upon the advice of the Professors of Classics, Mathematics, Chemistry, Physics and Natural History. It has been decided that the sum shall be devoted to the foundation of a Travelling Scholarship, to be called the James King of Irrawang Travelling Scholarship, and to be awarded on the following conditions:—

1. The Scholarship shall be awarded to a Graduate of not more than four years' standing, reckoned from his qualification by examination for his first Degree.

2. The holder will be required to prosecute his studies or researches to the satisfaction of the Senate, in some approved place or places during the tenure of his Scholarship.

3. The amount of the Scholarship is £130 per annum, tenable for not more than two years.

Candidates' applications should be in the hands of the Registrar at least three weeks before the first day of Lent Term of the year in which the Scholarship is awarded.

1894—Henderson, G. C., B.A.
1896—Smith, G. E., M.D., Ch.M.
1898—Chalmers, S. D., B.A.
1900—Nicholson, G. G., B.A.
1902—Sawkins, D. T., B.A.
1904—Allen, L. H., B.A.
1906—Weatherburn, C. E., B.A.

18—JOHN HARRIS SCHOLARSHIP.

Founded in 1887 by a gift of £1000 from John Harris, Esq., then Mayor of Sydney. Awarded for proficiency in Anatomy and Physiology at the Third Year Examination in Medicine. £40, tenable for one year.

* Holder of two other Scholarships.

1897—Willis, C. S.
1898—Burfitt, W. F., B.A.
1899—Barling, E. V. } æq.
Graham, Mabel J. }
1900—Page, E. C. G. } æq.
Wallace, D., B.A. }
Muscio, A., *prox. acc.*
1901—Mason, T. W.
1902—Buchanan, G. A.
1903—Quaife, C.*
Quaife, W. T. } æq.
O'Reilly, Susannah H. }
1904—Parkinson, T. C.
1905—Poate, H. R. G.
1906—Brearley, E. A. } æq.
Brookes, G. A. }

19—COUNCIL OF EDUCATION SCHOLARSHIP.

Founded in 1889 by a gift of £300 from the Trustees of the subscribers to a Memorial of the late Council of Education for the foundation of a Scholarship to be called the Council of Education Scholarship. Competition for the Scholarship is to be confined to the sons of teachers or officers in the Department of Public Instruction. It is provided by the deed of gift that before any award is made the fund shall be allowed to accumulate until it shall reach such a sum as will provide a Scholarship of not less amount than those already established in the University. It is to be awarded at the Matriculation Examination for general proficiency, but only when the candidates show such proficiency as in the opinion of the Examiners will entitle them to the award of a Scholarship, and is to be tenable for three years. The fund in December, 1905, amounted to £598 3s. 10d.

20—SCIENCE SCHOLARSHIPS OF THE ROYAL COMMISSIONERS FOR THE EXHIBITION OF 1851.

Given by the Royal Commissioners of the Exhibition of 1851, to be awarded to a student of three years' standing for the prosecution of study and research in some branch of Science with a view of developing the manufactures and industries of his country. £150, tenable for two years.

1892—Barraclough, S. H., B.E.
1893—Ledger, W. H., B.E.
1895—Watt, J. A., M.A., B.Sc.
1897—Strickland, Tom P., B.E.
1900—Durack, J. J. E., B.A.
1901—Harker, George, B.Sc.
1903—Boyd, A., B.Sc., B.E.
1905—Laby, T. H.

21—FRAZER SCHOLARSHIP.

Founded in 1890 by a bequest of £2000 from the Hon. John Frazer, M.L.C. £70.

* Resigned.

1. The Scholarship is awarded upon the result of the Third Year Examination in History, combined with such further examination or other test as the Professor of History may from time to time determine.

2. Those students only are eligible who have just completed their Third Year, and who at the time of the election are qualified for the B.A. Degree.

3. One half of the Scholarship money will be paid to the successful candidate at the time of election. The second half will be paid to him (i.) on his passing an examination qualifying for the Degree of M.A., with Honours in History, within two years of the date of his election, or (ii.) on his having within the same period pursued for at least one year, to the satisfaction of the Senate, some other course of historical study or research.

The Scholarship will be awarded in March to the student who shows most proficiency in the papers and essays set in connection with the Examination for Honours in the Third Year.

1897—Chalmers, S. D.
1898—Lance, Elisabeth A. } æq.
Pilcher, N. G. S. }
1899—Teece, R. C.
1900—Rutherford, Florence M.
Scrutton, C. Maude, *prox. acc.*
1901—Mills, Elsie A. H.
1902—Teece, R. N.
Mackness, Constance, *prox. acc.*
1903—Cole, P. R.
Kemp, R. C. King, *prox. acc.*
1904—Cramp, K. R.
1905—Paterson, J.
Rogers, P. H., *prox. acc.*
1906—Whitney, G. C.

22—WOOLLEY SCHOLARSHIPS.

The late Edwin Dalton, Esq., of Sydney, by his will in 1875, bequeathed his residuary estate, subject to a life interest on the part of his widow, and an annuity of £75, to the University to found "a Scholarship or Scholarships in commemoration of the late Dr. Woolley, its first Principal and Professor," desiring that the Scholarship or Scholarships so to be founded should "have reference to that branch of teaching or philosophy which the late Dr. Woolley chiefly inculcated." By the death of his widow in 1893 the University became entitled to the residuary estate, amounting to about £8000, subject to the annuity of £75.

The following are the regulations which have been adopted by the Senate for the award of the Scholarship:—

1. The Scholarship shall be awarded to a Graduate in Arts of less than four years' standing at the time of the award, reckoning from his qualification by examination for the B.A. Degree.

2. The Scholarship will be awarded by the Senate after report from the Professors of Greek, Latin, Modern Literature, Philosophy and History, who shall recommend to the Senate that candidate who in their opinion shows the greatest promise of success in further study of any one or more subjects falling under the heads of Language, Literature, History and Philosophy; provided that they consider such candidate to be of sufficient merit.

3. The holder will be required to prosecute his studies or researches to the satisfaction of the Senate at some approved place or places during the tenure of his Scholarship.

4. The amount of the Scholarship is £150 per annum, tenable for not more than two years.

5. An award of this Scholarship shall generally be made in alternate years with an award of the James King of Irrawang Travelling Scholarship.

Candidates' applications should be in the hands of the Registrar at least three weeks before the first day of Lent Term of the year in which the Scholarship is awarded.

1899—Dettmann, H. S., B.A.
1901—Todd, F. A., B.A.
1903—Merrington, E. N., M.A.
1905—Cole, P. R., B.A.

GARTON SCHOLARSHIPS.

Founded in 1898, by a bequest of £2050 from the late Thomas Garton, Esq., of Clapham, London, for the establishment of Scholarships for French and German and for Ancient History, or other subjects at the discretion of the Senate. Under the powers granted in the will, the Senate has determined to apply the fund to the foundation of two Scholarships for French and German.

24—GARTON SCHOLARSHIP, No. I.

Awarded at the First Year Examination in the Faculty of Arts, for proficiency in French and German. £45, tenable for one year.

1900—Wilshire, H.
1901—Sproule, Margaret.
1902—Armstrong, Clare A. C.
1906—Marks, Gladys

25—GARTON SCHOLARSHIP, No. II.

Awarded at the Second Year Examination in the Faculty of Arts, for proficiency in French and German. £45, tenable for one year.

1899—Bailey, Margaret A.
1900—Armstrong, Ina B. H.
1901—Wilshire, H.
1902—Sproule, Margaret
1904—Armstrong, Clare A. C.
1905—McIntosh, A. M.
1906—Not awarded

26—GEORGE AND MATILDA HARRIS SCHOLARSHIP.

Founded in 1900, by a gift of £1700 from Mrs. Matilda Duff Harris, of Ultimo House, in memory of her late husband, George Harris, Esq., to be called the "George and Matilda Harris Scholarship," and to be "awarded in the Faculty of Law, for the encouragement of the study of Law, under such rules and regulations as the Senate of the University may make from time to time for this purpose." Under this power it has been determined that the Scholarship "shall be awarded by the Senate in each year upon the results of Part II. of the Intermediate LL B. Examination. £50, tenable for one year.

1901—Robson, R. N., B.A.
1902—Wilson, G. H., B.A.
1903—Kemp, R. C. King
1904—Rowland, N. de H., B.A.
1905—Rowland, N. de H., B.A.
Teece, R. N., M.A., *prox. acc.*
1906—Jordan, F. R., B.A. } æq.
Real, E. T., B.A. }

27—QUEEN VICTORIA SCHOLARSHIP.

In 1905 the sum of £540 was presented to the University by subscribers to a memorial of the late Queen Victoria for the foundation of a Scholarship.

The fund was formed by contributions from the general community, largely from the school children.

The conditions of award are as follows:—

1. That it be awarded to the best girl matriculant of the year, be tenable for three years under the conditions usually existing for Scholarships.
2. That the Scholar shall satisfy the Chancellor, privately, that she requires the money, otherwise it shall be handed over to the Chancellor to be used for a bursary for girls, the original winner retaining the title of Queen Victoria Scholar.

The Scholarship is of the value of £20, and is tenable for three years.

1905—Maclean, Lillian A. } æq.
Smith, Clara R. }

THE COUTTS SCHOLARSHIPS.

Founded in 1905 by a gift of £2700 from Mrs. Janet Coutts, widow of the late Rev. James Coutts. The deed of gift provides for the establishment of two Scholarships, to be called respectively the James Coutts Scholarship and the John Coutts Scholarship, in memory of the donor's deceased sons, who were graduates of the University of Sydney.

28—THE JAMES COUTTS SCHOLARSHIP.

Awarded at the Third Year Examination in the Faculty of Arts for distinction in the study of the English Language and Literature. £50 for one year.

1906—MacCallum, M. L. (resigned).
Bellhouse, Constance A.

29—THE JOHN COUTTS SCHOLARSHIP.

Awarded on the recommendation of the Faculty of Science for distinction in the Science course to a student graduating as Bachelor of Science with Honours, who proposes to continue his studies in a way satisfactory to the Faculty. £50 for one year.

30—THE WILLIAM AND JANE GRAHAME MECHANICAL ENGINEERING SCHOLARSHIP.

Founded in 1905 by a gift of £1000 from Mrs. Jane Grahame, of "Strathearn," Waverley, widow of the late Hon. William Grahame. Awarded at the Second Year Examination for proficiency in Mechanical Engineering. The scholar is required to attend the courses of instruction in Mechanical Engineering during his tenure of the Scholarship. £40 for one year.

1906—Burnell, J. G. } æq.
May, H. W. }

RHODES SCHOLARSHIP.

REGULATIONS APPROVED BY THE TRUSTEES FOR THE ELECTION OF SCHOLARS IN NEW SOUTH WALES, 1906.

£300 per annum. Awarded annually, and tenable for three years at the University of Oxford.

Committee of Selection—The Committee of Selection shall consist of :—

1. His Excellency the Governor of New South Wales (in his private capacity).
2. The Chief Justice of New South Wales.

3. The University of Sydney, acting on the recommendation of the Professorial Board.

Eligibility of Candidates—

1. Candidates shall be British subjects, unmarried, and shall not be less than 19 or more than 25 years of age on the first day of October in the year for which they are elected.
2. Candidates shall be undergraduates or graduates of the University of Sydney.
3. Candidates shall have resided in New South Wales for an aggregate period of four years during the five years immediately preceding the date of election.

Method of Selection—

In accordance with the wish of Mr. Rhodes, the Trustees desire that "in the selection of a student to a Scholarship regard shall be had to (i.) his literary and scholastic attainments; (ii.) his fondness for and success in manly outdoor sports such as cricket, football and the like; (iii.) his qualities of manhood, truth, courage, devotion to duty, sympathy for and protection of the weak, kindliness, unselfishness and fellowship; and (iv.) his exhibition, during school-days, of moral force of character, and of instincts to lead and take an interest in his school-mates." Mr. Rhodes suggested that (ii.) and (iii.) should be decided in any school or college by the votes of fellow-students, and (iv.) by the Head of the school or college.

Where circumstances render it impracticable to carry out the letter of these suggestions the Trustees hope that every effort will be made to give effect to their spirit, but desire it to be understood that the final decision must rest with the Committee of Selection.

To aid the Committee in making a choice each candidate is required to furnish to the Chairman of the Committee of Selection:—

(*a*) A certificate showing that he is within the eligible limits of age.

(*b*) A certificate from the Professorial Board of the University of Sydney showing that he is exempt from or is capable of passing the Responsions examination of the University of Oxford, and that he is considered a suitable candidate for the consideration of the Committee of Selection.

(*c*) A full statement of his school and college career, including his educational qualifications, his record in athletics, and such testimonials from his masters at school and his professors at college in reference to the qualities indicated by Mr. Rhodes as seem best adapted to guide the judgment of the Committee of Selection.

Should it seem advisable, the Committee of Selection is free to apply to the candidates, or any selected number of them, such further intellectual or other tests as it may consider necessary for purposes of comparison. No candidate shall be finally selected without a personal interview.

The Chairman of the Committee of Selection will at once notify to the Trustees the name of the elected scholar, and will forward to Mr. Wylie (the Representative of the Trustees at Oxford) all the credentials and testimonials on which the selection was made. The elected scholar will then be furnished by the Chairman of the Committee of Selection with a memorandum prepared by the Representative of the Trustees at Oxford of the steps necessary to have his name enrolled at one of the Colleges of the University.

The Scholarship will be paid in four quarterly instalments, the first on beginning residence at Oxford, and thereafter terminally on the certificate of the College that the work and conduct of a student have been satisfactory. Without such certificate the Scholarship lapses. A Scholarship which lapses either from the failure of a student to secure his College certificate, from resignation, from marriage, or from any other cause, will not be filled up till the year in which it would naturally expire. This provision is made in order not to interfere with the rota of succeeding scholars.

1904—W. A. Barton, B.A.
1905—P. H. Rogers, B.A.
1906—M. L. MacCallum, B.A.

VII.

MILITARY AND CIVIL APPOINTMENTS.

MILITARY COMMISSIONS.

A Commission in the British Army was offered annually to a student of this University under the regulations issued with Army Orders, dated 1st January, 1892. The regulations for the granting of such commissions to University Candidates are undergoing revision.

1895—Harris, John
1896—Johnson, Robert B. I.

MILITARY CADETSHIP AT SANDHURST.

The University has been granted the privilege of one nomination per annum to a Cadetship in the Royal Military College at Sandhurst. The regulations are undergoing revision.

NAVAL MEDICAL SERVICE.*

The Lords Commissioners of the Admiralty have decided to allot a certain number of Commissions as Medical Officers in the Royal Navy to qualified candidates in the Australasian Colonies under the following arrangement :—

*See regulations in University Calendar for 1904, p. 204.

1. During the next three years (1904-6) Australia is to be offered two Commissions a year, and New Zealand one in alternate years, *i.e.*, six for Australia and two for New Zealand during that period.
2. The Candidates to be selected by the Governor-General of the Commonwealth and the Governor of New Zealand, respectively, after consulting the Commander-in-Chief on the Station, on the recommendation of the University Authorities.
3. Candidates must be registered Medical Practitioners, and hold suitable certificates in both medicine and surgery granted by the Universities of Sydney, Melbourne, or Adelaide, or the University of New Zealand.
4. The Candidates are either to be nominated direct or selected after passing an examination held by the local University according as the Governor and Admiral on the Station may determine. They must also pass the physical examination referred to in Clause 8 of the Regulations for entry of Candidates.
5. The selected Candidates are to be appointed provisionally only, their Commissions in the Royal Navy being determined by the result of a course of training at Haslar, in which they will be expected to qualify to the satisfaction of the Naval Medical Authorities.

OPEN COMPETITION EXAMINATIONS FOR THE CIVIL SERVICE OF INDIA, CLERKSHIPS (CLASS I.) IN THE HOME CIVIL SERVICE AND EASTERN CADETSHIPS.

These are held in London in the month of August each year. Every candidate is required to show that he had attained the age of twenty-two, and had not attained the age of twenty-four on the first day of August of the year in which the examination is held.

The full regulations will be found in the N.S.W. Government Gazette of the 28th of March, 1905, a copy of which may be seen in the Registrar's office.

VIII.

EXHIBITIONS.

1—SALTING EXHIBITION.

Founded in 1858 by a gift of £500 (with accumulations) from Severin Kanute Salting, Esq., to be applied for the promotion of sound learning. Awarded on the recommendation of

the Trustees of the Sydney Grammar School to a student proceeding thence to the University. £25, tenable for three years in the Faculty of Arts.

1894—Whitfeld, H. E.
1897—Stephen, H. M.
1900—Barton, W. A.
1903—MacCallum, M. L.
1906—Kaeppel, C. H.

2—J. B. WATT EXHIBITIONS.

Founded in 1876 by a gift of £1000 from the Honourable John Brown Watt, and two subsequent gifts of £1000 each in 1888 and 1889. The Exhibitions are bestowed on the bursary principle (see p. 208), being not tenable in the Professional Schools, and are awarded to boys or youths who have been for at least three years in private colleges or schools. They are tenable for three years, and entitle the holders to £30 for the first year, £40 for the second, and £50 for the third year. The candidates must have passed with special credit either the Junior or Senior Public Examination. The Exhibition is intended to enable the holder to obtain a course of higher education, either at the University or elsewhere, subject to the direction of the Senate. The complete conditions of award will be found in the Manual of Public Examinations.

3—STRUTH EXHIBITION.

Founded in 1883 by a gift of £1000 from John Struth, Esq., for the foundation of an Exhibition to assist students of intellectual promise, but whose means are not otherwise sufficient for the purpose, in obtaining a Degree in the Faculty of Medicine. The Exhibition is awarded to a student who has completed the First Year of the Arts course upon the following conditions:—

1. The Deans of the Faculty of Arts and the Faculty of Medicine shall receive a satisfactory assurance that the means of the applicant are insufficient to enable him to proceed with the Medical course without some such pecuniary assistance.

2. Applications for permission to compete for the Exhibition, accompanied by the necessary certificates, must be sent to the Registrar at least fourteen days before the first day of the Annual Examinations.

3. The Exhibition shall be awarded to that candidate, of those who are allowed to compete, who shall show the greatest proficiency in the First Year Examination of the Arts course, and whose attainments and promise are such as to justify the award.

4. The holder, who shall at once proceed with his studies in the Faculty of Medicine, shall receive the sum of £50 per annum for five years; provided that he shall only continue to hold it on the condition that he is diligent and of good conduct, and that he passes creditably all the Examinations of his course. In the event of illness of the holder causing prolongation of his course of medical study, the case will be subject to the special consideration of the Senate. The Exhibition is open to students of either sex. The last award was made in March, 1902.

5. The holder of this Exhibition is not exempt from the payment of any fees.

4—HORNER EXHIBITION.

Founded in 1889 by a bequest of £200 from Francis Horner, Esq., M.A. Awarded for proficiency in Mathematics at the Matriculation Examination. It cannot be held with two other Scholarships in the University. In case of equality in order of merit in competition for the Exhibition, preference shall be given to a student matriculating direct from the King's School, Parramatta, or in the absence of a student from that School, to a candidate from Newington College, Stanmore. £8, tenable for one year.

1897—Boyd, W. S.
Horn, W. R. } *prox. acc.*
Mort, H. S. } *prox. acc.*
Stephen, H. M. } *prox. acc.*
1898—Mort, Harold S.
1899—Tivey, J. P. } æq.
Vonwiller, O. U. } æq.
Smith, W., *prox. acc.*
1900—Wellisch, E. M.* } æq.
Roe, R. C.§ } æq.
Deck, H. L. } æq.
Griffiths, J. N. } æq.
Harris, J. S. } æq.

1901—Brearley, E. A. } æq.
Diethelm, O. A. A. } æq.
Weatherburn, C. E. } æq.
1902—Henderson, R. G.* } æq.
Mottershead, A. } æq.
Paul, A. } æq.
Tomlinson, G. L. } æq.
1903—Lyons, R. J.
1904—Dennis, S. } æq.
Watkins, H. L. } æq.
1905—Harrison, B. J. M.
1906—Booth, F. A. } æq.
Lloyd, A C. } æq.
Robinson, F. W. } æq.

IX.

BURSARIES.

The Bursaries at the disposal of the University have all been created (on the initiation of the late Dr. Badham, when Professor of Classics) by private foundations at a cost of £1000 each,

* Holder of two other Scholarships.
§ R. C. Roe did not comply with the conditions for holding the Exhibition.

together with a margin in some cases to ensure prescribed annual awards amounting to £50; and they are helped, on the part of the Senate, by an accompanying exemption from all lecture fees.

They were created for the purpose of placing the advantages of education in this University within the reach of students, who, whilst giving sufficient promise of benefit, would otherwise be excluded through the want of financial means. In order to secure privacy as regards the financial circumstances of the candidates and their friends, the nominations are directed to be made by the Chancellor alone.

Some of the founders indicate a preference for students from the country, but the majority are silent on this subject. Some state that the bursaries are "to enable the recipient to reside in one of the Affiliated Colleges, or in some other place approved of by the authorities of the University from which he may attend the prescribed courses of lectures;" but in the greater number there is no corresponding expression.

In some cases the founders contemplated full bursaries of £50 a year, as for students from the country, though without prohibiting divisions of the amount; but more generally they either expressly allow of awards of £25 a year, or other less sums than £50, or leave the matter open. And of late years the absence of new foundations has created a necessity for extending the usefulness of the bursaries by frequent divisions into halves; and the Senate has granted the same exemptions from fees as in the case of full bursaries.

No bursary is subject to any distinction of creed or of position, except that in one case a preference is expressed, but not imposed, for a student belonging to the donor's own Church, and in another the nomination is confined to sons of a minister of religion, but without distinction of Church; in both of which cases the founder bestowed a second bursary without any restriction.

All the bursaries, except five, which were given by Mr. Thomas Walker, in July, 1881, were founded before women were admitted to the University, and they were ostensibly for men only. But Mr. Walker's bursaries were for both sexes, and his instructions required that women should participate. The practice has since been to observe no distinction of sex.

The bursaries are tenable in the Faculty of Arts or that of Science, and not in the professional schools of Law, Medicine, Engineering or Dentistry.

The conditions on which the bursaries are conferred are:—

1. That the Chancellor shall have received satisfactory assurance that the candidate's own means, and those of his parents, guardians, "or other friends" (as expressed in some of the foundations), are insufficient to enable him to bear the cost of attending the University without the assistance of a bursary.
2. That the candidate is qualified by education and capacity to benefit by the University course, with which view some of the earlier foundations required that the candidate should be examined by the Professor of Classics and (in some cases "or") the Professor of Mathematics and certified by them, or one of them, to be intellectually fit. But as the University bursaries are now ordinarily granted after the Matriculation Examination, or an equivalent at the Public Examinations, this stipulation has dropped out of use.
3. That the bursar, if not already matriculated, shall matriculate at the commencement of the next Academic year after his appointment, and shall come into his attendance on lectures as the Senate may direct; and that he shall be diligent, and of good conduct; and that he shall pass creditably at the Annual Examinations during his tenure of the bursary.
4. Subject to the above conditions, the bursary is held for three years, except when granted to Undergraduates who have already gone through part of the three years' course, and have then become unable to finish their course without help, in which case the tenure is confined to the residue of the ordinary three years' course.

1—MAURICE ALEXANDER BURSARY.

In 1874, the sum of £1000 was given by Mrs. Maurice Alexander for the endowment of a bursary in memory of her late husband. The annual value is £45.

2—JOHN EWAN FRAZER BURSARY.

In 1876, debentures for £1250, at 4 per cent., were given by the Honourable John Frazer, M.L.C., for the endowment of a bursary, of the annual value of £50, to be called after the name of his deceased son, John Ewan Frazer.

3—ERNEST MANSON FRAZER BURSARY.

In 1876, debentures for £1250, at 4 per cent., were given by the Honourable John Frazer, M.L.C., for the endowment of a bursary, of the annual value of £50, to be called after the name of his deceased son, Ernest Manson Frazer.

4—WILLIAM CHARLES WENTWORTH BURSARY, No. I.

In 1876, the sum of £1000 was given by Fitz-William Wentworth, Esq., for the foundation of a bursary, of the annual value of £50, to be called after the name of his deceased father, William Charles Wentworth, Esq.

5—WILLIAM CHARLES WENTWORTH BURSARY, No. II.

In 1876, the further sum of £1000 was given by Fitz-William Wentworth, Esq., for the foundation of a second bursary, of the annual value of £50, to be called after the name of his deceased father, William Charles Wentworth, Esq.; but the founder directed that this sum should accumulate until it should reach £1500, that a second bursary should then be established, and that the surplus should accumulate until the sum of £1500 should again be reached, when a similar result is to follow. This foundation reached the sum of £1500 in 1886, and a second bursary was established accordingly.

6—WILLIAM CHARLES WENTWORTH BURSARY, No. III.

This fund was established in 1886 by the setting apart of the sum of £500 from the last-named foundation, to accumulate for the establishment of a third bursary in accordance with the directions of the founder. It amounted in December, 1905, to £1197 10s. 7d.

7—BURDEKIN BURSARY.

In 1876, the sum of £1000 was given by Mrs. Burdekin for the foundation of a bursary, to be called the Burdekin Bursary. The annual value is £40.

8—HUNTER-BAILLIE BURSARY, No. I.

In 1876, a sum of £1000 was given by Mrs. Hunter-Baillie for the foundation of a bursary, to be called the Hunter-Baillie Bursary. The annual value is £50.

9—HUNTER-BAILLIE BURSARY, No. II.

In 1877, a sum of £1000 was given by Mrs. Hunter-Baillie for the foundation of a bursary for the sons of ministers of religion. In the deed of gift the Senate is declared to be the sole judge of who are to be considered ministers of religion. The annual value is £50.

10—WALKER BURSARIES.

In 1881, the sum of £5000 was given by Thomas Walker, Esq., of Yaralla, Concord, for the foundation of bursaries. The gift was especially connected with the late resolution of the Senate, to grant to women equal participation with men in all University privileges, and it was desired by the founder that a portion of the bursaries—up to one half, as circumstances might dictate—should be made applicable to students of the female sex. Three bursaries, of the value of £50 per annum, are now awarded.

11—JESSIE E. DUNCAN BURSARY.

In 1901 the sum of £1000 was bequeathed to the University by Mrs. Jessie E. Duncan, widow of the late Dr. Duncan, R.N., for the foundation of a bursary in the Faculty of Arts, in accordance with such regulations as the Senate may determine.

THE LEVEY AND ALEXANDER ENDOWMENT.

In 1879, a sum of £1000 was given by Mrs. Maurice Alexander for the purpose of establishing an endowment in the University, in memory of her late parents, Isaac and Dinah Levey. It is intended for young men who shall have gone through the regular University course, and shall have passed the Statutory Examination for the Degree of Bachelor of Arts in the University of Sydney, and graduated with credit to themselves, and who shall then be desirous of entering a liberal profession, but be without sufficient pecuniary means to bear the cost of the necessary preparation and superior instruction.

It is directed that no regard whatever shall be had to the religious creed or denomination of any candidate, provided that his personal character and repute shall be good, and that in determining any such award the only considerations shall be such as have reference to the character and to the abilities and learning of the candidate, as proved by University Examinations, and to his financial position.

The award is to be made to a Graduate who shall have recently taken his B.A. Degree; but the preference shall be given to one who had graduated in Honours.

The professions which are held specially in view are those of Medicine and Surgery, and of Law in either branch, and those of Architects, Surveyors and Engineers; but full discretion is given to the University Senate to include any other secular profession which shall be deemed by them to be of a learned or liberal character.

It is intended that the Graduate selected under this endowment shall enjoy the income for three years either by one payment of not exceeding one hundred and fifty pounds (when sufficient accumulations are available) for fees or premiums on articles of pupilage; or by half-yearly payments of twenty-five pounds for three years; or partly in each way, as may be deemed by the Senate best for carrying out the objects in view. The last award was made in March, 1906.

THE HENRY WAIT BURSARY (IN MEDICINE).

Founded in 1900, by a bequest of £1000 from the late Henry Wait, Esq., of Redfern, "for the encouragement of the study of Medicine." The testator provides that the "Senate or Governing Body of the said University of Sydney shall be the proper person to appoint and determine the conditions and provisions of the said bursary, and to pay to the successful candidate for the same yearly, the amount to be fixed by them therefor." The bursary is awarded to a student who has completed the First Year of the Arts course upon the following conditions:—

1. The Deans of the Faculties of Arts and Medicine shall receive a satisfactory assurance that the means of the applicant are insufficient to enable him to proceed with the Medical course without some such pecuniary assistance.
2. Applications for permission to compete for the Exhibition, accompanied by the necessary certificates, must be sent to the Registrar at least fourteen days before the first day of the Annual Examinations.
3. The bursary shall be awarded to that candidate of those who are allowed to compete who shall show the

greatest proficiency in the First Year Examination of the Arts course, provided he shall be deemed to have shown sufficient merit.

4. The holder, who shall at once proceed with his studies in the Faculty of Medicine, shall receive the sum of £40 per annum for five years; provided that he shall only continue to hold the bursary on the condition that he is diligent and of good conduct, and that he passes creditably all the Examinations of his course. In the event of illness of the holder causing prolongation of his course of Medical study, the case will be subject to the special consideration of the Senate. The bursary is open to students of either sex. The last award was made in March, 1906.

5. The holder of this bursary is not exempt from the payment of any fees.

X.

* PRIZES.

1—WENTWORTH MEDAL.

Founded in 1854, by a gift of £200 from W. C. Wentworth, Esq., the interest to be applied for an Annual Prize for the best English Essay.

In 1889 the fund had accumulated sufficiently to provide for two Prizes of the value of £10 each, and a Prize is now given for competition amongst Undergraduates, and a second Prize for competition amongst Bachelors of Arts of not more than three years' standing.

GRADUATES' MEDAL.

1897—Cowan, David, B.A.
Taylor, Eliz. I., B.A., *prox. acc.*
1898—Dettmann, H. S., B.A.
1899—Dettmann, H. S., B.A.
1901—Gough, N. J., B.A. } *æq.*
Read, Elizabeth J., B.A. }
1902—Gough, N. J., B.A. } *æq.*
Scrutton, C. Maude, B.A. }
1904—Green, H. M., B.A.
1905—Allen, L. H., B.A.
1906—Not awarded.

UNDERGRADUATES' MEDAL.

1897—Dowling, F. V.
1898—Nicholson, G. G.
1899—Gough, N. J.
1900—Gough, N. J.
1905—MacCallum, M. L.
1906—MacCallum, M. L.

*The names of prize winners before the year 1896 will be found in the University Calendar for 1900.

2—NICHOLSON MEDAL.

Founded in 1867 by a gift of £200 from Sir Charles Nicholson, Bart., D.C.L., to provide an annual Prize for Latin Verse. The competition for this medal is open to all Undergraduates and Graduates of not more than two years' standing. Value, £10.

1902—Allen, L. H.
1904—Allen, L. H.

3—BELMORE MEDAL.

Founded in 1870, by a gift of £300 from the Right Honourable the Earl of Belmore. Awarded annually to a member of the University, under the standing of M.A., for proficiency in Geology and Practical Chemistry, with special reference to Agriculture. The Examination is held in Michaelmas term. Value, £15. (See page 199.) The last award was made in 1885.

4—FAIRFAX PRIZES.

Founded in 1872, by a gift of £500 from John Fairfax, Esq. Awarded to the greatest proficients among the female candidates at the Senior and Junior Public Examinations. In the case of Seniors the candidates must not be over twenty-five years of age, and of Juniors seventeen years. Value, £15 and £10 respectively.

SENIOR PRIZE.

1896—Bourne, Eleanor E.
1897—Copas, Theodora E. J.
1898—Knox, Marjory
1899—Armitage, Lilian M.
1900—Bilbrough, Jessie
1901—Skillman, Jessie
1902—Bourne, Florence I. } æq.
Watson, Maria E. }
1903—Jones, Grace E.
1904—MacLean, Lillian Alexia
1905—Shortland, Edith

JUNIOR PRIZE.

1896—Bowmaker, Jessie } æq.
Bruce, Grace Mitchell }
Mills, Elsie A. H. } *prox. acc.*
Stewart, Jessie I. }
1897—Armitage, Lilian M. } æq.
Harkess, Blanche J. }
Sandford, Blanche V., *prox. acc.*
1898—Kellick, Stella M.
1899—Skillman, Jessie
1900—Watson, Maria E.
1901—Jones, Eveline G. } æq.
Ramsay, Muriel B. }
1902—MacLean, Lillian Alexia
1903—Norris, Mabel A. C.
1904—Ballantine, Mabel A.
1905—Stephen, Gladys V.

5—JOHN WEST MEDAL.

Founded in 1874, by a gift of £200 from the subscribers to a memorial of the Reverend John West, Editor of the *Sydney Morning Herald*. Awarded to the greatest proficient in the Senior Public Examination. Value, £6.

1896—Bourne, Eleanor E.
Horn, W. R.
Robson, R. N. } *prox. acc.*
Stephen, H. M.
1897—Todd, F. A.
1898—Browne, C. S. } æq.
Teece, R. N.
Macrossan, H. D. } *prox.acc.*
Morton, H. G. S.
1899—Wellisch, E. M. } æq.
Roe, R. C.
1900—Weatherburn, C. E.
1901—Stephen, J. F. } æq.
Henderson, R. G.
Thelander, C. A., *prox. acc.*
1902—Porter, W. E. T.
1903—Sampson, G. A.
1904—Castlehow, Stanley
1905—Robinson, F. W.
Campbell, A. L.
Walker, A. S. } *prox. acc.*
Walker, E. B.

6—SMITH PRIZE.

Founded in 1854, maintained until the year 1885 by annual gifts, and subsequently by a bequest of £100 from the Honourable Professor Smith, M.D., C.M.G. Awarded to the best Undergraduate of the First Year in Experimental Physics. Value, £5.

1896—Beaver, W. R. } æq.
Harker, G.
1897—Ward, L. K.
1898—Jordan, G. E. G.
1899—Fraser-Hill, Charlotte E.
1900—Close, J. C.
1901—Weatherburn, C. E.
1902—Mason, W. H.
1903—Lusby, S. G.
1904—Sampson, G. A. } æq.
Watkins, H. L.
1905—Cotton, L. A. } æq.
Sewell, L. G.

7—NORBERT QUIRK PRIZE.

Founded in 1886, by a gift of £144 from the subscribers to a memorial of the Rev. John Norbert Quirk, LL.D., late principal of Lyndhurst College. Awarded for proficiency in Mathematics at the Second Year Examination. Value, £5.

1897—Griffiths, F. G.
1898—Sawkins, D. T.
1899—Stephen, H. M.
1900—Mort, H. S.
1901—Vonwiller, O. U.
1902—Wellisch, E. M.
1903—Weatherburn, C. E.
1904—Tomlinson, G. L. } æq.
Skillman, Jessie
1905—Lyons, R. J.
1906—Watkins, H. L.

8—SLADE PRIZES.

Founded in 1886, by a gift of £250 from G. P. Slade, Esq., for the encouragement of Science. Two prizes are awarded for proficiency in Practical Chemistry and Practical Physics respectively. Value, £5 each.

PRACTICAL CHEMISTRY.

1896—Jack, R. L.
1897—Winton, L. J.
1898—Heden, E. C. B. } æq.
Newman, J. M. }
1899—Whitfeld, H. E., B.A.
1900—Giblin, N. E.
1901—Saunders, G. J.
1902—Foxall, H. G.
1903—Priestley, H.
1904—Carter, H. G. } æq.
May, H. W. }
1905—Farran-Ridge, C.

PRACTICAL PHYSICS.

1897—Madsen, J. P. V.
1898—Weston, P. L. } æq.
Wilson, R. C. }
1899—Lethbridge, H. O. } æq.
Whitfeld, H. E., B.A. }
1900—Gray, G. J. } æq.
Stoddart, R. }
1901—Brown, G. F. Campbell
1902—Shellshear, J. L.
1903—Atkinson, J. } æq.
Jones, S. W. }
1904—Hammond, W. L. } æq.
White, C. J. }
1905—Cotton, L. A. } æq.
Davidson, G. F. }

9—GRAHAME PRIZE MEDAL.

Founded in 1891, by a bequest of £100 from William Grahame, Esq., of Waverley. Awarded to such candidate as shall display the greatest general proficiency at the Senior Public Examination. Value, £4.

1896—Bourne, Eleanor E.
Horn, W. R. }
Robson, R. N. } *prox. acc.*
Stephen, H. M. }
1897—Todd, F. A.
1898—Browne, C. S. } æq.
Teece, R. N. }
Macrossan, H. D. } *prox. acc.*
Morton, H. G. S. }
1899—Roe, R. C. } æq.
Wellisch, E. M. }
1900—Weatherburn, C. E.
1901—Stephen, J. F. } æq.
Henderson, R. G. }
Thelander, C. A., *prox. acc.*
1902—Porter, W. E. T.
1903—Sampson, G. A.
1904—Castlehow, Stanley
1905—Robinson, F. W.
Campbell, A. L. }
Walker, A. S. } æq.
Walker, E. B. }

10—COLLIE PRIZE.

Founded in 1892, by a bequest of £100 from the Rev. Robert Collie, F.L.S., of Newtown. Awarded to a student of any Faculty at the First Year Examination in Botany. Value, £4.

1896—Graham, Mabel J.
1897—Bourne, Eleanor E.
1898—Higgins, T. E. C.
1899—Buchanan, G. A.
1900—Quaife, W. T.
1901—McCulloch, H. T. C.
1902—MacInnes, A., B.A.
1903—Dawes, Madeleine M.
1904—Ferguson, E. W.
1905—Hamilton-Browne, Eliz. I.

11—BEAUCHAMP PRIZE.

Founded in 1901, by a gift of £625 from His Excellency the Right Hon. William Lygon, Earl Beauchamp, K.C.M.G.,

Governor of New South Wales. It is awarded for the best essay on some literary or historical subject, and is of the value of £25. The subject shall be determined either upon the recommendation of the donor or of the Professors of Classics, Modern Literature, History, Philosophy and Law. The Examiners shall be appointed by the Senate at the December meeting in each year. The competition is open to all Undergraduates and Graduates of not more than twenty-five Terms' standing from Matriculation. (See page 200.)

1902—Teece, R. Clive, M.A.
1904—Green, H. M., B.A.
1905—Maxwell, W., B.A.
1906—Green, H. M., B.A.

12—KAMBALA PRIZE.*

In 1904 the sum of £250 was presented to the University by the members of the Kambala Girls' Union for the foundation of a prize to be awarded at matriculation to a pupil of a private school for girls in New South Wales for general proficiency, to assist in defraying the cost of the purchase of books and other expenses incidental to attendance at the University.

The prize is to be awarded annually to a matriculated student who, through pecuniary circumstances, is, in the opinion of the Chancellor, deemed such as to render her a suitable recipient of such a prize.

Should the principal be increased in the future to a sufficient amount, the prize may be converted into a scholarship to be awarded under similar conditions.

The term "private school" has been defined by the donors as including those schools the pupils of which are not entitled to compete for State University Bursaries.

1905—Cohen, Fanny.
1906—Lane, Laura E.

*Names of prize winners, not necessarily implying the receipt of the prize money.

*UNIVERSITY PRIZES.

I.—M.A. EXAMINATION.

A Medal is awarded to the most distinguished candidate in the Honour Examination for the Degree of Master of Arts in the several schools, if of sufficient merit.

LOGIC, MENTAL, MORAL AND POLITICAL PHILOSOPHY.

1896—Smairl, J. H.
1899—Garran, R. R.
1902—Fletcher, M. Scott
1903—Merrington, E. N.

MODERN HISTORY.

1901—Teece, R. C.

MATHEMATICS.

1906—Weatherburn, C. E. } æq.
Wellisch, E. M. }

II.—B.A. EXAMINATION.

A Medal is awarded to the most distinguished candidate in the Honour Examination for the Degree of Bachelor of Arts in the several schools, if of sufficient merit.

CLASSICS.

1897—Whitfeld, H. E.
Dettmann, H. S., *prox. acc.*
1898—Evans-Jones, D.P.
1899—Teece, R. C.
1900—Robson, R. N.
1901—Todd, F. A.
1903—Barton, W. A.
1904—Allen, L. H.
1906—MacCallum, M. L.

MATHEMATICS.

1896—Stewart, D. G.
1897—Chalmers, S. D.
1899—Sawkins, D. T.
1903—Wellisch, E. M.
1904—Weatherburn, C. E.
1905—Lyons, R. J.

LOGIC AND MENTAL PHILOSOPHY.

1896—Swanwick, K. ff.
1897—Wallace, D.
1898—Pilcher, N. G. S.
1899—Nicholson, G. G.
1900—Merrington, E. N.
1901—Bowmaker, Jessie } æq.
Fry, F. Mildred }
1902—Ferguson, J. A.
1903—Cole, P. R.
1904—Watts, P. R.
1905—Northcott, C. H. } æq
Paterson, J. }
1906—Lovell, H. T.

* The names of those who gained prizes before 1896 will be found in the University Calendar for 1900.

III.—LL.B. EXAMINATION.

A Medal is awarded to the student who exhibits the greatest proficiency at the LL.B. Examination, if of sufficient merit.

1896—Bavin, T. R.
1898—Peden, J. B.
1900—Mitchell, E. M.
1903—Teece, R. Clive
1906—Rowland, N. de H.

IV.—M.D. EXAMINATION.

A Medal is awarded to the candidate who exhibits the greatest proficiency at the M.D. Examination, if of sufficient merit.

1895—Smith, Grafton Elliot (Anatomy)
1903—Sandes, Francis Percival (Surgery)

V.—M.B. EXAMINATION.

A Medal is awarded to the student who exhibits the greatest proficiency at the M.B. Examination, if of sufficient merit.

1896—Dixon, G. P.
1898—MacPherson, J.
1900—Burfitt, W. F.
1901—Macintosh, A. H.
1906—Parkinson, T. C.

VI.—B.Sc. EXAMINATION.

A Medal is awarded to the student who exhibits the greatest proficiency at the B.Sc. Examination, if of sufficient merit.

1900—Madsen, J. P. V. (Mathematics)
1901—Petrie, J. M. (Chemistry)
Boyd, A. (Physics).
1902—Vonwiller, O. U. (Mathematics and Physics)

VII.—M.E. EXAMINATION.

A Medal is awarded to the most distinguished candidate in the Honour Examination for the Degree of Master of Engineering, if of sufficient merit.

1894—Dare, H. H.
1896—Bradfield, J. J. C.

VIII.—B.E. EXAMINATION.

A Medal is awarded to the student who exhibits the greatest proficiency at the B.E. Examination, if of sufficient merit.

1895—Doak, W. J. } æq.
Jackson, C. F. V. }
1897—Strickland, T. P.
1901—Madsen, J. P. V. (Civil)
Boyd, W. S. } æq. (Mining)
Newman, J. M. }
1902—Boyd, A. (Civil)
1904—Weston, P. L. (Mechl. & Electl.)

IX.—ENGLISH VERSE.

A Medal of the value of £10 is given by the University for the best composition in English Verse. The competition for this Medal is open to all Undergraduates and Bachelors of Arts of not more than two years' standing.

1901—Austin, A. H.
1902—Austin, A. H.
1903—Green, H. M., B.A.
1904—Green, H. M., B.A.
1905—Allen, L. H., B.A.
1906—Not awarded.

X.—UNIVERSITY PRIZE FOR PHYSIOGRAPHY.

A University Prize of the value of £5 is awarded to the student of the First Year who passes the best Class Examination in Physiography, if of sufficient merit.

1896—Harker, G.
1897—Rutherford, Florence M.
Mutton, I., *prox. acc.*
1898—Jarrett, Marjorie K. } æq.
Poole, W. }
Buchanan, G. A., *prox. acc.*
1899—Taylor, T. G. } æq.
Mackness, Constance }
1900—Maxwell, W.
1901—Goddard, E. J.
Cramp, K. R., *prox. acc.*
1902—Flashman, H. W.
1903—Hammond, W. L.
Bridge, J. M., *prox. acc.*
1904—Taylor, Dorothy R.
1905—Brodziak, Birdie K.

XI.—UNIVERSITY PRIZES AT PUBLIC EXAMINATIONS.

Prizes of £20 and £10 were appropriated annually by the Senate until the year 1894 for the greatest proficients amongst the male candidates at the Senior and Junior Public Examinations. A Prize of £5 is now offered for competition amongst the greatest proficients in the Junior Examination, the Prize for Seniors being withdrawn. The limit of age for Juniors is seventeen years.

JUNIOR PRIZE.

1896—Teece, R. N.
1897—Griffiths, J. N.
1898—Armstrong, R. S. } æq.
Neal, H. E. }
Molesworth, E., *prox. acc.*
1899—Rogers, P. H. }
Stephen, J. F. } æq.
Paterson, John }
1900—MacCallum, M. L. } æq.
Mottershead, A. }
1901—McIntosh, A. M. } æq.
Atkinson, J. }
Mulcahy, F. B., *prox. acc.*
1902—Castlehow, S.
1903—Alden, M. C. } æq.
Cohen, C. H. }
1904—Macrossan, N. W.
Campbell, A. L. }
Robinson, F. W. } *prox. acc.*
Vickers, J. G. }
1905—Teece, L. G.

* PRIVATE ANNUAL PRIZES.

PATHOLOGY.—Prizes, given by Dr. W. Camac Wilkinson, for proficiency in Pathology.

1898—Burfitt, W. F., B.A., B.Sc.

1899—Graham, Mabel J.
Macintosh, A. H., *prox. acc.*

MATERIA MEDICA AND THERAPEUTICS.—Prizes given by Mr. Thomas Dixson, M.B., Ch.M.

1897—McLean, G.
Burfitt, W. F., B.A., *prox. acc.*
1898—Graham, Mabel J.
1899—Page, E. C. G.
1900—Dansey, St. J. W.

ENGLISH.—Prizes of £2 10s. each, given by Professor MacCallum for English Essays in the First and Second Years, and of £10 for proficiency in English in the Third Year.

First Year.

1896—Nicholson, G. G. } æq.
White, Margaret I. } æq.
1897—Gough, N. J.
1898—Adams, Frances L. } æq.
Wilson, D. } æq.
1899—Teece, R. N.
1900—Allen, L. H. } æq.
Austin, A. H. } æq.
1901—Watts, P. R.
1902—Paterson, J.
1903—MacCallum, M. L.
1904—Taylor, Dorothy R.
1905—Marks, Gladys

Second Year.

1896—Dowling, F. V.
1897—Read, Elizabeth J. } æq.
Withycombe, E. J. } æq.
1898—Gough, N. J.
1899—Wilson, D.
1900—Fraser-Hill, Charlotte E. } æq.
Fullerton, Lottie } æq.
1901—Allen, L. H.
1902—Watts, P. R.
1903—Henderson, R. G.
1904—MacCallum, M. L.
1905—Schroder, Aphra F.

Third Year.

1896—Dettmann, H. S.
1897—Fidler, Isabel M.
1898—Nicholson, G. G.
1899—Scrutton, C. Maude
1901—Armstrong, Helen D. H.
1902—Waterhouse, E. G.
Cole, P. R., *prox. acc.*
1903—Allen, L. H.
1905—MacCallum, M. L.

* The names of those who gained prizes before the year 1896 will be found in the Calendar for 1900.

BIOLOGY.—Prizes of £2 2s., given by Professor Haswell, for proficiency in Zoology.

1896—Graham, Mabel J.
1897—Bourne, Eleanor E. } æq.
Muscio, A. }
1898—Suckling, F. M.
Woolnough, R. E., *prox. acc.*
1899—Buchanan, G. A.
1900—Leslie, J. R.
1901—Palmer, C. R.
1902—Weatherburn, C. E.
1903—Archdall, M.
1904—Ferguson, E. W.
1905—Burfitt, Mary B.

BIOLOGY.—Prizes of £1 1s., given by Professor Haswell, for excellence in Laboratory notes.

1896—Humphery, E. M.
1897—Muscio, A.
1898—Mansfield, W. C. } æq.
Smith, S. A. }
1899—Connolly, T. P.
1900—Power, J. W.
1901—Binney, Constance C. } æq.
Gibson, D. D. }
Graham, D. H. }
1902—Bradley, C. H. B. } æq.
Poate, H. R. G. }
White, W. J. }
1903—Archdall, M. } æq.
Ewing, T. }
1904—Child, Sophia R. } æq.
Grigor, W. E. }
Parnell, Ethel C. }
Tebbutt, A. H., *prox. acc.*
1905—Macintosh, C. L. S. } æq.
Tait, G. }

GEOLOGY.—Prizes of £4 and £5 each, given by Professor David, for proficiency in Geology respectively in the Second and Third Years.

Second Year.

1896—Woolnough, W. G.
1897—Waterhouse, G. A.
1898—Ball, L. C.
Winton, L. J.
1899—Newman, J. M.
Heden, E. C., B.A., *prox. acc.*
1900—Verge, J., B.A.
Mawson, D.
1901—Green, L. C.†
1902—Jensen, H. I.
1903—Foxall, H. G.
1904—Atkinson, J.
1905—White, C. J.

Third Year.

1897—Woolnough, W. G.
1898—Waterhouse, G. A.
1899—Wilton, E. N.
1900—Jordan, G. E. G. } æq.
Peterson, A. J. }
1901—Verge, J., B.A.
1902—Taylor, T. G.
1903—Jensen, H. I.
1904—Foxall, H. G.
1905—Atkinson, J.

PRACTICAL PETROLOGY.—Prize of £1, given by Professor David, for proficiency in Practical Petrology.

1899—Gregson, W. H., B.A.
1901—Green, L. C.†
1903—Nardin, C. C.
1904—Perry, E. A.†
1905—Kesteven, H. L.

† Unmatriculated.

PHILOSOPHY.—A Gold Medal, of the value of £10, given by Professor Anderson, M.A., for the best essay on a Philosophical subject; competition to be open to all Bachelors of Arts of not more than two years' standing.

1898—Wallace, D., B.A.
1899—Nicholson, G. G., B.A.
1900—Merrington, E. N., B.A.
1902—Merrington, E. N., B.A.
1904—Austin, A. H., B.A.
1905—Powell, J. G. W., B.A.
1906—Watts, P. R., B.A.

LOGIC AND MENTAL PHILOSOPHY.—Prizes of £5 each, given by Professor Anderson.

Second Year.

1897—Pilcher, N. G. S.
1898—Nicholson, G. G.
1899—Merrington, E. N.
Rutherford, Florence M., *prox. acc.*
1901—Ferguson, J. A.
1902—Cole, P. R.
1903—Watts, P. R.
1904—Northcott, C. H. } æq.
Paterson, J. }
1905—Lovell, H. T.
1906—Stewart, W. P.

Third Year.

1897—Wallace, D.
1898—Pilcher, N. G. S.
1899—Nicholson, G. G.
1900—Merrington, E. N.
1901—Bowmaker, Jessie } æq.
Fry, F. Mildred }
1902—Ferguson, J. A.
1903—Cole, P. R.
1904—Watts, P. R.
1905—Northcott, C. H. } æq.
Paterson, J. }
1906—Lovell, H. T.

HISTORY.—Prize of £5, given by Professor Wood, for proficiency in History.

1897—Lance, Elisabeth A.
1898—Teece, R. C.
1899—Robson, R. N. } æq.
Rutherford, Florence M. }
1900—Mills, Elsie A. H.
1901—Teece, R. N.
1902—Cole, P. R. } æq.
Kemp, R. C. King }
1903—Cramp, K. R. } æq.
Maxwell, W. }
1904—Paterson, J. } æq.
Rogers, P. H. }
1906—Not awarded.

FRENCH.—Prize of Books given by the Comité de l'Alliance Française for proficiency in French.

1900—Gough, N. J.

POLITICAL SCIENCE.—Prize of £5, given by Professor Pitt Cobbett, for proficiency in the Elements of Political Science.

1901—Browne, J. A.
1902—Pitt, A. G. M.
1903—Hodge, S. T.
1904—Beckenham, J. G.
1905—Teece, R. N.
1906—Watts, P. R. } æq.
Wheeler, A. R. }

CLINICAL MEDICINE.—Prize of £5, given by Mr. R. Scot-Skirving, M.B., Ch.M., for proficiency in Clinical Medicine.

1901—Moncrieff, E. W.

METALLURGY — Prizes of £3 and £2, given by Professor Liversidge, for proficiency in Practical Metallurgy.

1901—Freeman, C. C.
Heden, E. C. B., B.A., B.Sc.
1902—†Brereton, E. Le G.
†Stoddart, R.
1903—Saunders, G. J.
Barr, J.
1904—Stephen, J. F.
Burgess, J. H.
1905—Bridge, J. M.
Foxall, H. G.

LOGIC.—Prize of £5 5s., given by Professor Anderson, for proficiency in Logic amongst Medical Students.

1905—Ferguson, E. W. } æq.
Parkinson, H. H. }

ELECTRICAL ENGINEERING.—Prizes of £1 1s. each, given by Mr. E. Kilburn Scott, for proficiency in Electrical Engineering.

Third Year.

1905—Flashman, H. W.

Fourth Year.

1905—Bellemey, S. J.

PALÆONTOLOGY (PRACTICAL).—Prize of £2, given by Mr. W. S. Dun, for the best original essay on the Palæontology of the district examined during the annual Geological excursion.

DESCRIPTIVE GEOMETRY.—Prize of £2 2s., given by Mr. S. H. Barraclough, for proficiency in Descriptive Geometry.

1906—Ada, W. L.

ENGINEERING ESSAY.—Prize of £3 3s., given by Mr. S. H. Barraclough, for an essay on some Engineering subject.

1906—Flashman, H. W.

† Not proceeding to a degree.

HONOURS AT THE DEGREE EXAMINATIONS.

FACULTY OF ARTS.

M.A. EXAMINATION.

GREEK AND LATIN LITERATURE.

1876—Beatty, J. J. M.
1897—Class II.—Pratt, F. V.
1902—Class II.—McLaren, A. D.
1903—Class III.—Yarnold, A. H.
1904—Class II.—Jensen, Klio.

MATHEMATICS.

1865—Murray, C. E. R.
1876—Rennie, E. H.
1877—Butler, E. J.
1900—Class II.—Sawkins, D. T.
1906—Class I.—Weatherburn, C. E.
Wellisch, E. M.

LOGIC AND MENTAL PHILOSOPHY, ETC.

1887—Legge, J. G.
1890—Woodthorpe, R. A.
1892—Cocks, N. J.
Brennan, C. J.
1894—Shaw, H. G.
1896—Class I.—Smairl, J. H.
1896—Class II.—Millard, G. W.
1899—Class I.—Garran, R. R.
Class II.—Taylor, Eliz. I.
1902—Class I.—Fletcher, M. S.
1903—Class I.—Merrington, E. N.
Lasker, S.

ENGLISH LITERATURE AND POLITICAL PHILOSOPHY.

1894—Russell, F. A. A.

FRENCH AND GERMAN LITERATURE.

1901—Class II.—Roseby, T. E.
1904—Class I.—Wilshire, H.

LATIN AND MODERN FRENCH LITERATURE.

1895—Class II.—Bowmaker, Ruth.

LATIN AND OLD FRENCH LITERATURE.

1903—Class I.—Paxton, Betha.
1904—Class II.—Uther, Mary H.

PHILOSOPHY AND FRENCH LITERATURE.

1896—Class II.—Stonham, J.

ENGLISH LITERATURE AND MODERN HISTORY.

1897—Class II.—Doust, Edith L.

MODERN HISTORY.

1898—Class II.—Chalmers S. D.
Edwards, E. S.
1900—Class I.—Teece, R. C.
Class II.—Lance, Elisabeth A.
1902—Class II.—Jones, C. H. F.
Class III.—Gordon, Emily I.
1903—Class II.—Mills, Elsie, A. H. } æq.
Teece, R. N. } æq.
Nolan, J. H. M.
1904—Class I.—Cole, P. R.
Class III.—Crawford, T. S.
1905—Class II.—Fullerton, Lottie (Mrs. Austin).
Murray, Flor. J. (Mrs. Armitage).
1906—Class II.—Cramp, K. R.

ENGLISH LITERATURE.

1905—Class II.—Barnes, Pearl E.
1906—Class II.—Mallarky, Ethel M. (including one section of Mod. Hist.)

*B.A. EXAMINATION.

LATIN.

1897.

Class I.—Whitfeld, H. E.
Dettmann, H. S.
Class II.—Armstrong, Margaret J.
Hobbs, E.

1898.

Class I.—Fidler, Isabel M.
Evans-Jones, D. P.
Class III.—Dunnicliff, Mary C.

1899.

Class I.—Teece, R. C.
Parsons, J.
Class II.—Galt, J.
Walsh, J. J.
Read, Elizabeth J.
Liggins, Jessie H.
Class III.—Marr, Fannie A.
Perkins, F. T.

1900.

Class I.—Robson, R. N.
Hill, J. H. F.
Class II.—Bailey, Margaret A.
Mutton, I.
Class III.—Uther, Mary H.
Gough, N. J.
Small, E. Ella.

1901.

Class I.—Todd, F. A.
Mills, Elsie A. H. } æq.
Paxton, Betha } æq.
Class II.—Palmer, Selina E.
Hill, J. G. W.
Class III.—Bruce, Grace M.
Power, P. H.

1902.

Class I.—Fraser-Hill, Charlotte E.
Teece, R. N.
Class II.—Ferguson, J. A.
Sandford, Blanche V.
Class III.—Crisford, Hilda N. M.
Larcombe, E. R.

1903.

Class I.—Barton, W. A.
Jensen, Klio

1904.

Class I.—Allen, L. H.
Class II.—Levick, A. M. } æq.
Jordan, F. R. } æq.
Bonney, R. S.

* The names of those who obtained Honours before 1896 will be found in the University Calendar for 1900.

LATIN—*continued.*

1905.

Class I.—Henderson, R. G.
Class II.—Rogers, P. H.
Graham, Frances

1906.

Class I.—MacCallum, M. L.
Class II.—Clark, Marjorie D.
Watson, Maria E.

GREEK.

1897.

Class I.—Dettmann, H. S. } æq.
Whitfeld, H. E. }
Class II.—Hobbs, E.

1898.

Class I.—Evans-Jones, D. P.

1899.

Class I.—Teece, R. C.
Walsh, J. J.
Class II.—Galt, J.
Class III.—Perkins, F. T.

1900.

Class I.—Robson, R. N.
Class II.—Hill, J. H. F.
Class III.—Mutton, I.

1901.

Class I.—Todd, F. A.

1902.

Class I.—Teece, R. N.
Class III.—Larcombe, E. R.

1903.

Class I.—Barton, W. A.
Jensen, Klio
Class II.—Stewart, J. R.
Class III.—Breutnall, Nina T.

1904.

Class I.—Allen, L. H.
Bonney, R. S.
Class II.—Campbell, A. P.

1905.

Class I.—Paterson, J. } æq.
Rogers, P. H. }
Henderson, R. G.

1906.

Class I.—MacCallum, M. L.
Watson, Maria E.

FRENCH.

1897.

Class II.—Armstrong, Margaret J.
Musmann, C. E. G.

1898.

Class I.—Fidler, Isabel M.
Class II.—De Lissa, Ethel N. } æq.
Harwood, Marian F. }
Dey, Charlotte J.
Jarvie, B.

1899.

Class I.—Nicholson, G. G.
Parsons, J.
Class II.—Curtis, W. J.
Class III.—Page, A. E.
Lee, T. N.

1900.

Class I.—Bailey, Margaret A.
Gough, N. J.
Uther, Mary H.
Class III.—Small, E. Ella

1901.

Class I.—Paxton, Betha
Armstrong, Ina B. H.
Palmer, Selina E.

1902.

Class I.—Mackness, Constance
Wilshire, H.
Fraser-Hill, Charlotte E.
Armstrong, Helen D. H.
Class III.—Reid, Violet M.

FRENCH—*continued.*

1903.
Class I.—Sproule, Margaret
Waterhouse, E. G.
Sharpe, G. F.
Docker, Gladys M. B.
Wardrop, Maggie R.

1904.
Class I.—Jordan, F. R.
Murray-Prior, Doroth. K.
MacCallum, Isabella R.
Class II.—Spence, J.
Carey, Daisy

1905.
Class I.—Armstrong, Clare A. C.
Class II.—Graham, Frances } æq.
Latreille, Meta G. E. }
Class III.—Austin, Fanny M.
Haigh, V.

1906.
Class I.—McIntosh, A. M.
Lovell, H. T., *prox. acc.*
Class II.—Bourke, J. O. A.
Class III.—McLean, A. L.
Coleman, E. A.

GERMAN.

1897.
Class I.—Dettmann, H. S.
Class II.—Musmann, C. E. G.

1898.
Class II.—Harwood, Marian F.
De Lissa, Ethel N.

1899.
Class I.—Nicholson, G. G.

1900.
Class I.—Bailey, Margaret A.

1901.
Class I.—Armstrong, Ina B. H.

1902.
Class I.—Wilshire, H.
Armstrong, Helen D. H.

1903.
Class I.—Sproule, Margaret
Waterhouse, E. G.

1905.
Class I.—Armstrong, Clare A. C.

1906.
Class I.—McIntosh, A. M.

ENGLISH.

1897.
Class I.—Dettmann, H. S.
Class II.—Barnes, Pearl E.
Class III.—Saunders, Eva F.

1898.
Class I.—Fidler, Isabel M.
Class II.—Jarvie, B.

1899.
Class I.—Nicholson, G. G.
Class III.—Slack, Ida M.

1900.
Class I.—Scrutton, C. Maude
Class III.—Gough, N. J.

1901.
Class II.—Armstrong, Ina B. H.

1902.
Class I.—Armstrong, Helen D. H.
Phillips, F. G.
Mackness, Constance
Crisford, Hilda N. M.

1902—*continued.*
Class II.—Holt, Edith J. K.
Wheeler, H. C. F.
Fullerton, Lottie
Kemp, Laura M. King

1903.
Class I.—Waterhouse, E. G.
Cole, P. R.
Class II.—Hope, P.

1904.
Class I.—Allen, L. H.
Skillen, Elizabeth } æq.
Watts, P. R. }

1905.
Class II.—Northcott, C. H.
Coombes, A. J.

1906.
Class I.—MacCallum, M. L.
Bellhouse, Constance A.

HISTORY.

1897.

Class I.—Chalmers, S. D.
Monahan, W. W.
Class II.—Jones, C. H. F.

1898.

Class I.—Lance, Elisabeth A. } æq.
Pilcher, N. G. S. }
Class II.—Gordon, Emily I.
Class III.—Rossiter, Florence A.

1899.

Class I.—Teece, R. C.
Class II.—Read, Elizabeth J.

1900.

Class I.—Rutherford, Florence M.
Scrutton, C. Maude
Fell, Catherine I.
Class II.—Nolan, J. H. M.

1901.

Class I.—Mills, Elsie A. H.
Jarrett, Marjorie K.
Class II.—Crawford, T. S.

1902.

Class I.—Teece, R. N.
Mackness, Constance
Fullerton, Lottie
Class II.—Reid, Violet M.

1903.

Class I.—Cole, P. R.
Kemp, R. C. King

1904.

Class I.—Cramp, K. R.
Class II.—Maxwell, W.

1905.

Class I.—Paterson, J.
Rogers, P. H.
Northcott, C. H.

1906.

Class I.—Whitney, G. C.
Class II.—Leeson, Ida E.
Class III.—Bourne, Florence I.

MATHEMATICS.

1897.

Class I.—Chalmers, S. D.

1898.

Class II.—Griffiths, F. G.
Class III.—Jarvie, B.

1899.

Class I.—Sawkins, D. T.
Durack, J. J. E.
Mathews, H. B.

1900.

Class II.—Stephen, H. M.

1902.

Class I.—Hawken, R. W. H.
Smith, W.
Class II.—Tivey, J. P.

1903.

Class I.—Wellisch, E. M.
Sharpe, G. F.

1904.

Class I.—Weatherburn, C. E.
Brearley, E. A.
Class II.—Sutton, Mabel H.

1905.

Class I.—Barry, D. R. } æq.
Skillman, Jessie }
Tomlinson, G. L. }
Class II.—Paul, A.

1906.

Class I.—Lyons, R. J.
Cotton, L. A. } æq.
Lusby, S. G. }
Mottershead, A. }
Class II.—Collins, C. M.
Chrismas, C. H.
McIntosh, A. M.
Class III.—Bourne, Florence I.
Roughton, Gladys M.
Walker, C. C. P.

LOGIC AND MENTAL PHILOSOPHY.

1897.

Class I.—Wallace, D.
Whitfeld, H. E.
Stephen, J. W. F.
Class II.—Broinowski, L. T.

1898.

Class I.—Pilcher, N. G. S.
De Lissa, Ethel N.
Class II.—Bavin, Gertrude L.
Dumolo, Nona
Class III.—Edwards, E. E.

1899.

Class I.—Nicholson, G. G.
Davies, Edith W.
Slack, Ida L.
Class II.—Withycombe, E. J.
Curtis, W. J.
Lafferty, T. M.
Class III.—Clipsham, Gertrude M.
Turner, Annie E.

1900.

Class I.—Merrington, E. N.
Class II.—Bailey, Margaret A.
Binns, W. J.
Class III.—Gillam, Dora A.
Sheridan, Muriel E. B.

1901.

Class I.—Bowmaker, Jessie } æq.
Fry, F. Mildred }
Class II.—Bruce, Grace M.
Wilson, G. H.
Class III.—Crawford, T. S.

1902.

Class I.—Ferguson, J. A.
Green, H. M.
Class II.—Castleman, A.
Brownlie, Eveline A.

1903.

Class I.—Cole, P. R.
Austin, A. H.
Hope, P.
Class II.—Grant, W. J.
Stewart, J. R.
Giles, J. H. P.
McWilliam, N. G.

1904.

Class I.—Watts, P. R.
Fry, Edith M.
Class II.—Levick, A. M.
Wheeler, A. R.
Campbell, A. P.
Spence, J.
Class III.—Goddard, T. H.
Powell, J. W. G.

1905.

Class I.—Northcott, C. H. } æq.
Paterson, J. }
Coombes, A. J.
Class II.—Melville, H. P.
Austin, Fanny M.

1906.

Class I.—Lovell, H. T.
Portus, G. V.
Whitney, G. C.
Class II.—McLean, A. L.
Jones, E. D. L.
Parsons, Florence L.
*Ross, J. A.
Bourke, J. O. A.

GEOLOGY AND PALÆONTOLOGY.

1897.

Class II.—Langley, Isabella E.

1898.

Class II—Heden, E. C. B.
Potts, Cuthbert

1899.

Class II.—Lee, T. N.

1900.

Class I.—Wilton, E. N.

1902.

Class II.—Alexander, Maud M.

1905.

Class II.—Barry, D. R.
Burfitt, Mary B.
Wade, R. T.

* Unmatriculated.

BOTANY.

1893.
Class I.—MacPherson, J.

1894.
Class II.—Holmes, W. F.

CHEMISTRY.

1894.
Class II.—Blatchford, T.

1897.
Class II.—Sharp, W. A. R.

PHYSICS.

1899.
Class I.—Durack, J. J. E

1902.
Class II.—Tivey, J. P.

1906.
Class I.—Lusby, S. G.

FACULTY OF LAW.

LL.B. EXAMINATION.

1897.

Class I.—Bavin, T. R.

1898.

Class I.—Peden, J. B.
Class II.—Clines, P. J.
Hammond, J. H.
Parker, W. A.

1899.

Class II.—Waddell, G. W.
Edwards, D. S.
Bloomfield, W. J.

1900.

Class I.—Mitchell, E. M.
Class II.—Forsyth, W. G.

1901

Class II.—Pilcher, N. G. S.
Stacy, F. S.
Clegg, W. C.
Davidson, C. G. W.
Tozer, S. D.

1903.

Class I.—Teece, R. C.
Class II.—Robson, R. N.
Arnold, A. G. de L.
Rogers, W. A. H.
Stephen, H. M.

1904.

Class II.—Browne, J. A.
Wilson, G. H.
Vickery, E. F.

1905.

Class II.—Ferguson, J. A.
Kemp, R. C. King
Green, H. M.

1906.

Class I.—Rowland, N. de H.
Class II.—Wilson, D.
Teece, R. N.

FACULTY OF MEDICINE.

M.D. EXAMINATION.

1895.—Smith, G. E. (Anatomy).
1903.—Class I.—Sandes, F. P. (Surgery).
Blackburn, C. B. (Medicine).
1904—Class II.—Hall, E. C. (Materia Medica and Therapeutics).

M.B. EXAMINATION.

1897.

Class I.—Dixon, G. P.
Class II.—Pain, E. M.

1898.

Class I.—MacPherson, J.
Class II.—Hall, E. C.
Kater, N. W.
Throsby, H. Z.
Ellis, L. E.

1899.

Class II.—MacMaster, D. Æ. D. } bæ.
Blackburn, C. B. }
Cargill, W. D. } æq.
Magarey, F. W. A. }

1900.

Class I.—Burfitt, W. F.
Class II.—McLean, G.

1901.

Class I.—Macintosh, A. H.
Class II.—Graham, Mabel J.
Barling, J. E. V.
Cox, H.

1902.

Class II.—Page, E. C. G.
Wallace, D.
Muscio, A.

1903.

Class II.—Dansey, St. J. W.
Hipsley, P. L.
Smith, S. A.
Mason, T. W. } æq.
Davis, J. S. }
Woolnough, R. E.
Plomley, M. J.
Suckling, F. M.

1904.

Class II.—Buchanan, G. A.
Browne, C. S.
Connolly, T. P.
Sharp, G. G.
Mawson, W.
D'Arcy, Constance E.

1905.

Class II.—Simpson, F. G. M.
Smith, P. E. W.
McKelvey, J. L.
O'Reilly, Susannah H.

1906.

Class I.—Parkinson, T. C.
Class II.—McCulloch, H. T. C. } bæ.
Quaife, W. T. }
Palmer, C. R.
Harris, S. H.

FACULTY OF SCIENCE.

B.Sc. EXAMINATION.

CHEMISTRY.

1899.
Class I.—Harker, G.

1901.
Class I.—Petrie, J. M.
Class II.—Heden, E. C. B.

GEOLOGY AND PALÆONTOLOGY.

1897.
Class I.—Horton, Marion C.

1898.
Class I.—Woolnough, W. G.
Poole, W.

1899.
Class I.—Waterhouse, G. A.

1901.
Class I.—Jordan, G. E. G. } æq.
Peterson, A. J. }
†Süssmilch, C. A.

1902.
Class I.—*Verge, J.
†Green, L. C.

1903.
Class I.—Taylor, T. G.
Class II.—†Stone, W. G.

1904.
Class I.—Jensen, H. I.

1905.
Class I.—*Foxall, H. G.

1906.
Class I.—*Atkinson, J.
Class II.—Dwyer, T. C.
Goddard, E. J.

MINERALOGY.

1894.
Class I.—Watt, J. A.

1903.
Class II.—Jensen, H. I.

GEOLOGY AND MINERALOGY.

1901.
Class II.—Peterson, A. J. } æq.
Heden, E. C. B. }

1902.
Class I.—†Larcombe, C. O. G.
*Verge, J.

1905.
Class I.—*Foxall, H. G. } æq.
Mawson, D. }
Gray, G. J. }

1906.
Class I.—*Atkinson, J.

PHYSICS.

1900.
Class I.—Madsen, J. P. V.

1901.
Class I.—Boyd, A.
Weston, P. L.
Class. II.—Mort, H. S.

1902.
Class I.—Vonwiller, O. U.

1903.
Class I.—Close. J. C.

1904.
Class II.—Taylor, T. G.

1905.
Class I.—Mason, W. H.

1906.
Class I.—Ewing, T.
Class III.—Sharp, L. H.

* Not passing through the regular course. † Unmatriculated.

BIOLOGY.

1897.
Class I.—Horton, Marion C.
1898.
Class II.—Davis, Agnes M. H.
1901.
Class II.—O'Reilly, Susannah H.
1902.
Class II.—Johnston, S. J.
1906.
Class II.—Goddard, E. J.
Dwyer, T. C.

MATHEMATICS.

1900.
Class I.—Madsen, J. P. V.
1901.
Class II.—Mort, H. S.
Boyd, A.
Class III.—Weston, P. L.
1902.
Class I.—Vonwiller, O. U.
1903.
Class II.—Close, J. C.
1905.
Class I.—Weatherburn, C. E.

M.E. EXAMINATION.

CIVIL ENGINEERING.

1894.
Class I.—Dare, H. H.
1896.
Class I.—Bradfield, J. J. C

B.E. EXAMINATION.

CIVIL ENGINEERING.

1897.
Class I.—Strickland, T. P.
Class II.—Shortland, W. A.
Smail, H. S. I.
1898.
Class II.—Boyd, R. J.
1899.
Class II.—Beaver, W. R.
Mathison, W. C.
1900.
Class II.—Hawken, R. W.
1901.
Class I.—Madsen, J. P V.
Myers, H. W.
1902.
Class I.—Boyd, A.
Class II.—Corlette, J. M. C.
1905.
Class II.—Martyn, A. M.
Smail, J. A. M.

MINING AND METALLURGY.

1899.
Class II.—Jack, R. L.
Morris, J. F.
1900.
Class II.—Poole, W.
Jackson, C. F. V.

* Not passing through the regular course.

MINING.

1901.

Class I.—Newman, J. M.
Boyd, W. S.
Class II.—Gorringe, L. S.
*Horsburgh, J.
Grut, C. F. de J.

1902.

Class II.—Freeman, C. C.
†Süssmilch, C. A.
Cameron, C. B.
Whitfeld, H. E.
Heden, E. C. B.
Williams, L. B.
†Green, L. C.
Thomas, D.
Mawson, D.
Gould, H. J.

1903.

Class II.—Ward, L. K. } æq.
Giblin, N. E. }
Peterson, A. J.
Gray, G. J.
Corlette, J. M. C.

1904.

Class II.—Patterson, B. G.

1905.

Class II.—Stephen, J. F.
Webb, S. D.

1906.

Class II.—Bridge, J. M.

METALLURGY.

1901.

Class I.—Newman, J. M.
*Harker, G.
Boyd, W. S.
Class II.—Grut, C. F. de J.
*Horsburgh, J.

1902.

Class II.—Heden, E. C. B.
Freeman, C. C.
Gould, H. J.
†Morson, W. J.

1903.

Class I.—Ward, L. K.
Class II.—Peterson, A. J.
†Brereton, E. Le G.
Gray, G. J.
Corlette, J. M. C
†Süssmilch, C. A.

1904.

Class I.—Shellshear, W.
Saunders, G. J.
Class II.—Patterson, B. G.
Hill, J. H. F.
Barr, J.

1905.

Class II.—Burgess, J. H.
Taylor, T. G.
Stephen, J. F.
†Perry, E. A.

1906.

Class I.—Bridge, J. M.
Class II.—Whiteman, W. D.
Foxall, H. G.

ASSAYING AND ORE TREATMENT.

1903.

Class I.—†Brereton, E. Le G.
†Stoddart, R.

1903.

Class II.—Giblin. N. E. } æq.
Ward, L. K. }
Verge, J.

* Not passing through the regular course. † Unmatriculated.

ASSAYING AND ORE TREATMENT—*continued.*

1904.
Class II.—Saunders, G. J.
Barr, J.

1905.
Class I.—Stephen, J. F.
Class II.—Burgess, J. H.

1906.
Class I.—Bridge, J. M.
Foxall, H. G.

ELECTRICAL ENGINEERING.

1903.—*Boyd, A.
1904.—Class I.—Weston, P. L.
Class II.—†Hall, R. V.

1906.—Class I.—†Marriott, E. W.
Class II.—Cowlinshaw, R. G.
Bellemey, S. J.

MECHANICAL AND ELECTRICAL ENGINEERING.

1905.
Class I.—†Morris, L. C.
Class II.—Woodcock, L. R.

ENGINEERING DESIGN AND DRAWING.

1906.
(Mining and Metallurgy.)
Class II.—Foxall, H. G.
Bridge, J. M.

(Mechanical and Electrical.)
Class I.—†Marriott, E. W.

*Not passing through the regular course. †Unmatriculated.

MATRICULATION EXAMINATION.

HONOURS.

NOVEMBER, 1905.

COOPER SCHOLARSHIP No. II. FOR CLASSICS—R. A. Fitz Herbert.
BARKER SCHOLARSHIP No. II. FOR MATHEMATICS—A. L. Campbell.
LITHGOW SCHOLARSHIP FOR FRENCH AND GERMAN—T. A. Turner (resigned)
A. L. Campbell.
AITKEN SCHOLARSHIP FOR GENERAL PROFICIENCY—A. L. Campbell* } æq.
T. A. Turner }
SALTING EXHIBITION—C. H. Kaeppel.
HORNER EXHIBITION FOR MATHEMATICS—F. A. Booth
A. C. Lloyd } æq.
F. W. Robinson
KAMBALA PRIZE FOR WOMEN—Laura E. Lane.

GREEK.

Class I.
Fitz Herbert, R. A.

Class II.
Kaeppel, C. H. } æq.
Macken, J. V. }

Class III.
Turner, T. A.
Nott, P. R.
Walker, E. B. } æq.
Norris, Mabel A. C. }
Jones, S. E.

GERMAN.

Class I.
Campbell, A. L.
Norris, Mabel A. C.
Calow, P. F.
Turner, T. A.

Class II.
Sear, H. R.
Shortland, Edith
Davis, N. J.

Class III.
Clayton, H. E.
Wray, C. D. W.

LATIN.

Class I.
Robinson, F. W.
Fitz Herbert, R. A.
Macken, J. V.
Walker, E. B.
Kaeppel, C. H.

Class II.
Walker, A. S.
Weston, C. A.
Lee, H. B.
Norris, Mabel A. C.
Griffiths, H.
Pike, W. E.

Class III.
Turner, T. A.
Jones, S. E.
Lane, Laura E.
Martin, J. S. S.
Clayton, H. J.
Duncan, Annie B.
Briggs, A. A.
Armstrong, Millicent S. H.
Wray, C. D. W.
Campbell, A. L.
Paton, J. T.

FRENCH.

Class I.
Robinson, F. W.
Mote, L. C.
Walker, A. S.
Griffiths, H. } æq.
Turner, T. A. }
Hartley, Effie C. }
Hodson, Susan A.
Fitz Herbert, R. A.
McPhee, Isabel
Lee, H. B.

Class II.
Kaeppel, C. H.
Sear, H. R.
Booth, F. A.
Campbell, A. L.
Lane, Laura E. } æq.
Hunter, J. G. }
Davis, Neville J. } æq.
Armstrong, Millic. S. H. }
Macken, J. V.
Shortland, Edith

* Holder of two other Scholarships.

Class III.

Vaughan, Ethel
Martin, J. S. S. } æq.
Taylor, Margaret H. }
Tansey, J. T.
Hudson, L. W. } æq.
Wray, C. D. W. }
Fielding, Una L.
Fairlie, Lillias G.
Douglass, A.
Abbott, Isabel M.
Maxwell, A. V.
Marchant, A. D. B.
Meek, H. K. } æq.
Pike, W. E. }

MATHEMATICS.

Class I.

Campbell, A. L.
Walker, A. S. } æq.
Vaughan, H. }
Pike, W. E.
Lloyd, A. C. } æq.
Booth, F. A. }
Robinson, F. W. }

Class II.

Hooke, R. W. } æq.
Phippard, F. A. }
Tivey, E. A. }
Shortland, Edith
Cotton, C. M.
Weedon, S. H. } æq.
Humphries, H. G. }
Lee, H. B. }
Mote, L. C. }
Hudson, L. W. } æq.
Turner, T. A. }
Griffiths, H. } æq.
Crellin, J. R. }
Davis, N. J.

Class III.

Frederich, V. J.
Hunter, J. G. } æq.
Jones, S. E. }
Cox, L. W. }
Weston, C. A. } æq.
Maxwell, A. V. }
Kay, W. E.
Duncan, Annie B.
Alexander, H. de V. } æq.
Walker, E. B. }
Kaeppel, C. H. }
McAdam, F. V. L. }

MARCH, 1906.

PASS.

Adams, H. W.
Allen, W. V.
Anderson, Ruth R.
Ardill, Katie
Armstrong, Netta H.
Atterton, Beatrice S.
Barlow, C. D.
Barnett, K.
Bates, Essie E. R.
Benjamin, F. W.
Blair, Annie S.
Bland, F. A.
Blight, S. E.
Boulton, N. P.
Bowden, R.
Breckels, E. O.
Brown, Catherine V.
Brown, M. C.
Brown, W. D.
Browne, G. B.
Buckley, Cora R.
Burt, C. H.
Callaghan, Blanche C.
Calow, P. F.
Calver, H. E.
Cameron, Elizabeth
Campion, R. B.
Cane, P. F.
Carey, Elizabeth
Carroll, A. J.
Carroll, L. A.
Carroll, O. O.
Carter, A. G.
Chapman, Nellie R. M.
Chisholm, H. B.
Chislett, A. B.
Church, J. V.
Cohen, L. A.
Collins, C. R.
Conolly, V. R.
Cook, Laura M.
Dart, G.
Davies, Edith M.
Davis, T. E.
De Putron, Vera R.
Donaldson, J. E.
Duffy, W.
Duncan, Annie B.
Ebsworth, Haidée B.
Eldershaw, P. S.
Evans, H. V.
Evans, J.
Fell, Kathleen S.
Ferguson, A. H.
Ferguson, Ethel V.
Ferrie, A. M.
Ferrier, Elizabeth I.
Ferrier-Watson, H. R.
Flower, W.
Forbes, Williamina J.
Fox, O. P.
Franki, N. H.
Frederich, V. J.
Furner, Elsie
Gardiner, L.
Gibson, A. J.
Grassick, H. R.
Grimley, Dora
Grimley, E.
Halloran, G. R.
Harris, Ruby E.
Harley, Stella A.
Haswell, J. B.
Hawkins, E. V.
Hay, J.
Hayes-Williams, L. G.
Hennessy, Eileen M.
Hill, N. F.
Hodge, Ruby M.
Hooke, R. W.
Houston, K.
Howard, E.
Hufton, E. A.
Hume, F. W.

Humphries, H. G.
Hunt, R. E.
Hunter, J. G.
Ikin, Annie E.
Irving, G. M.
Jackson, C. P.
Jenkins, Winifred M. E.
Johnston, Alma F.
Kelly, V. J.
Kennedy, H. McM.
King, N. S.
King, Oro R. Z. Z.
Laing, Wilhelmina M.
Lee, A. J.
Lester, R. A.
Leslie, W. C. L.
Levick, Gladys U.
Lewis, Martha J.
Light, B.
Lindon, Ellen M.
Lloyd, C. H.
Logan, C. D.
McAulay, Mary
McCarron, R. G.
McCauley, J. F.
MacDonald, E. C.
Macdonald, Flora A.
McIntyre, Hannah M.
McKelvey, May
McKenzie, H. D.
McLauchlin, W. J. H.
Macmillan-Brown, Millicent A.
Maclellan, Annette
McMinn, W.
McMordie, Elizabeth J.
Macnamara, B.
Macnamara, L.
Macphee, Isabel
Macqueen, R. A. A.
McTague, N. P.
Malcolmson, J. A.
Manfred, M. E.
Marchant, A. D. B.
Marden, S. A.
Marshall, T. E.
Matheson, Minnie
Mathews, W. P. M.
Meek, H. K.
Metcalfe, J. B.
Miller-Hermes, Rachel R.
Millett, W. L.
Minnett, R. B.
Mitchell, J. T.
Mollison, A. J.
Mollison, Helen A.
Moore, C. H.
Morley, Muriel V.
Muir, Elsie M.
Mullens, A. P.
Mulvey, R. D.
Newman, Eunice A.
North-Ash, E. A.
Northcott, C. H.
Nutman, R. E.
O'Grady, F. V.
Owen, T. A.
Palmer, C. H.
Rawson, H. W. H.
Read, N.
Rhodes, Gertrude V. R.
Richardson, A. H.
Roberts, Bonney M. D.
Robertson, J. I.
Roche, F. W. C.
Roughton, Doris M. A.
Roxburgh, N. W.
Russell-Jones, R. W.
Ryder, Violet M.
Sabiel, F. H.
Scott, C. F.
Scott, J. H. V.
Scott, R. K.
Shaw, R. G. V.
Sheldon, Clara G.
Shortland, Edith
Simmonds, C. C.
Simpson, E. T. de L.
Sly, Eileen M.
Sly, Marion C. M.
Smith, A. M.
Smith, A. C.
Smith, H.
Sparke, Dora L.
Spence, Jeanie L.
Stewart, Dorothea L.
St. George, Floris E. S.
Stockdale, R. L.
Stocker, E. O.
Swanton, W. R.
Taylor, Dorothy
Taylor, Margaret H.
Teasdale, C. A.
Terrey, L. C.
Thom, A. O.
Thomson, Edith M.
Thomson, L. N.
Tiden, W. J.
Tooth, A. G.
Traill, F. W.
Traill, Ida G.
Tugwell, F. W.
Vaughan, Ethel
Vindin, Agnes M.
Ward, Edith M.
Wark, Gertrude M.
Watt, H. C.
Weir, W. J. A.
Welch, H. L. St. Vincent
Wilson, Jessie L.
Withers, Phyllis
Yarnall, F. E.
Yarnall, J. W.

ENTRANCE EXAMINATION

FOR THE FACULTIES OF LAW, MEDICINE AND SCIENCE, AND THE DEPARTMENT OF ENGINEERING.

March, 1906.

PASS.

Those whose names are marked with the letter (E) are qualified for admission to the Department of Engineering.

Ahern, E. D.
Bridges, F. J.
(E) Bourne, H. T.
Chapple, A. T.
(E) Cox, L. W.
Clipsham, W. B.
Douglas, G. A. C.
Edye, B. T.
(E) Fitzhardinge, R. G.
Fletcher, W. M. A.
(E) Haigh, V. A.
(E) Herbert, D. P.
Hittmann, F. C. B.
Lehmaier, L. H.
(E) Lilley, E. N.
(E) Lynch, T. P.
(E) Macartney, G. W.
(E) Markwell, N. W.
Martin, W. W.
Martin, J. S. S.
Mackie, J. W. S.
(E) Nowland, H. H.
Parker, T. E.
(E) Pockley, F. G. A.
Pye, C. R. A.
(E) Reynolds, L. J.
(E) Sachs, W. J.
(E) Smith, R. G.
(E) Tansey, J. T.
(E) Ward, H. K.
(E) Williams, O. B.
(E) Wright, C. E.

FACULTY OF ARTS.

FIRST YEAR EXAMINATION.

December, 1905, and March, 1906.

COOPER SCHOLARSHIP No. III. FOR CLASSICS—S. Castlehow.

GEORGE ALLEN SCHOLARSHIP FOR MATHEMATICS—H. S. Utz.

GARTON SCHOLARSHIP No. I. FOR FRENCH AND GERMAN—Gladys Marks.

UNIVERSITY PRIZE FOR PHYSIOGRAPHY—Birdie K. Brodziak.

PROFESSOR MACCALLUM'S PRIZE FOR ENGLISH ESSAYS—Gladys Marks.

HONOUR LISTS.

LATIN.

Class I.

Castlehow, S.
Chapman, B. B.
Archdall, H. K.

Class II.

Harrison, B. J. M.
McGill, A. D.

Class III.

Tomkinson, W.
Mitchell, Clarice

GREEK.

Class I.

Castlehow, S.
Chapman, B. B.
Archdall, H. K. } æq.
McGill, A. D. } æq.

Class II.

Tomkinson, W.

JUNIOR FRENCH.

Class I.

Marks, Gladys
Brodziak, Birdie K.
Malcolm, Olive M.
Utz, H. S.

Class II.

Mitchell, Clarice
Croft, Edith
Fallon, C. J.
*Gombert, F.

Class III.

Snow, S. B.
Hall, A. Vine
Lodder, Nelly
Lion, Rosine
Jopling, Mildred H.

JUNIOR GERMAN.

Class I.

Marks, Gladys

Class II.

Hall, A. Vine

MATHEMATICS.

Class I.

Utz, H. S.
Harrison, B. J. M.
Cohen, Fanny
Bateman, J. E. (Sci.)

Class II.

Carter, E. M. (Eng.)
Davidson, G. F. (Eng.)

Class III.

Wooster, F. C.
Alexander, Hilda
Lane, G. T.
Bates, A. W.

CHEMISTRY.

Class I.

Fallon, C. J.

*Evening Student.

The following have completed the First Year Examination.

(Alphabetical.)

*‡Abrams, R. O.
Alexander, Hilda
Archdall, H. K.
Aspinall, A. M.
*‡Barlex, H. N. C.
Bates, A. W.
Bennett, Tib S.
Blaxland, F.
Booth, F. S.
Bowman, Myril MacD.
Bray, G. W.
Brodziak, Birdie K.
Browning, R. H.
Byrne, G. C.
Castlehow, S.
Chapman, B. B.
Cohen, Fanny
Cosgrove, C.
*Crane, C. C.
Croft, Edith
*‡Curry, J. N.
*‡Cusbert, A. W.
Deffell, Alice H.
Densley, Lucy N.
De Putron, Violet N.
*Dick, Lily J.
*‡Douglass, A. H.
Duesbury, Elsie M. P.
Edwards, H. G.
Fallon, C. J.
Finley, C. A.
Fitz, Blanche
Fitzpatrick, Mabel D.
Flower, Emily M.
Fry, H. W.
*‡Gombert, F.
Gourlay, Mary E. F.
Hall, A. V.
Harrison, B. J. M.
Henry, C.
*‡Hicks, A. W.
*‡Hunt, W. E.
Ives, Margaret
Jopling, Mildred H.
Kenny, J. P.
Kesteven, H. L.
Lane, G. T.
Laurence, R. L.
*Leavers, C. W.
Light, Hilda V.
Lindeman, G. B.
Lion, Rosine
Lodder, Nelly
*‡Lowe, M. H.
*Lynch, J.
McElhone, F. E.
McGill, A. D.
*McIlwraith, W. D.
McKibbin, Rachel
McLennan, S.
Malcolm, Olive M.
Marks, Gladys H.
Marsh, Alison M.
*‡Miles, B. J. V.
Mitchell, Clarice
*Monro, J. P.
Morris, E. S.
Norman, K. D.
*Olsen, J. M. S.
Pitt, C. N.
Pocock, R. B.
Pridham, Alice M.
*Quirk, F. P.
*‡Ranson, J. R.
Robertson, N. K.
Roseby, Clara
See, H. C. M.
Shellshear, W. G.
Sherwin, T. A.
*Short, F.
Silvester, V. H.
Simpson, R. I.
Sinclair, G. W.
Small, Ethel M.
Snow, S. B.
Stack, W. J.
Stokes, S. W.
*Swain, Edith M. M.
*Taylor, R. C.
Thomson, E. G.
Tomkinson, W.
Utz, H. S.
Vance, E. B. M.
Vickers, L.
Walker, J.
Wall, W. T. S.
Watts, Ethel L.
Webb, J. E.
Whyte, H. W.
Woodlands, Mabel R.
*‡Wooster, F. C.
Wyndham, Elinor M.
Young, H. R.

Order of Merit in Individual Subjects.

ENGLISH.

Pass, December, 1905.

Chapman, B. B.
Brodziak, Birdie K.
Castlehow, S.
Harrison, B. J. M.
Marks, Gladys H.
Archdall, H. K.
Croft, Edith
Watts, Ethel L.
Bowman, Myril MacD.
Cohen, Fanny
*Miles, B. J. V.
Bennett, Tib S.
*Cusbert, A. W.
Utz, H. S.
Light, Hilda V.
Woodlands, Mabel R.
*Grey, E. E.
} eq.

* Evening Student. ‡ These students take Physics and Physiography in the Second Year under present teaching arrangements.

English—*continued.*

Tomkinson, W.
Alexander, Hilda
Lodder, Nelly } æq.
Pocock, R. B. } æq.
*Ranson, J. R. } æq.
Snow, S. B.
Mitchell, Clarice } æq.
Wyndham, Elinor M. } æq.
Small, Ethel M.
*Barlex, H. N. } æq.
*Lowe, M. W. } æq.
*Monro, J. P. } æq.
McGill, A. D. } æq.
Lane, G. T. } æq.
Jopling, Mildred } æq.
Duesbury, Elsie M. P.
*Hunt, W. E.
Fitzpatrick, Mabel D.
Flower, E. Monica
Roseby, Clara } æq.
Russell Young, H. } æq.
*Douglass, A. H. } æq.
Grey, T. H. } æq.
Vickers, L. } æq.

*Mann, J. W.
*Cane, P. F.
*Burke, J. J.
Browning, R. H. } æq.
*Taylor, R. C. } æq.
Kesteven, H. L. } æq.
Vance, E. B. } æq.
Mahoney, W. A.
Sinclair, G. W. } æq.
Whyte, H. W. } æq.
Marsh, Alison M. } æq.
Pridham, A. M. } æq.
Fallon, C. J.
Densley, L. Norma
Kenny, J.
Edwards, H. G.
*Curry, J. N. } æq.
Rudder, L. B. } æq.
Walker, J. } æq.
*Wooster, F. C. } æq.
Vine Hall, A.
*Binns, K.
Ives, Margaret } æq.
McElhone, F. E. } æq.

Gourlay, Mary E. F. } æq.
Laurence, R. } æq.
*Gombert, F.
Bray, G. W.
Finley, C. A.
*Stephen, J. N.
McKibbin, Rachel
Henry, C.
*Morris, W. A.
*Smith, A. M.
Newmarch, R. L. } æq.
Shellshear, W. G. } æq.
Pratt, Annie M. } æq.
*Montgomerie, W. H.
Booth, F. S. } æq.
Dickson, Nora L. } æq.
Morris, E. S. } æq.
Wilkinson, L. V.
De Putron, Violet
Stack, W. J.
*Thompson, W. A.
*Bussmann, F.
*Abrams, R. O.

Pass (alphabetical.)

Aspinall, A. M.
Bates, A. W.
Byrne, G. C.
*Carne, H. B.
Deffell, Alice H.
Fitz, Blanche
*Greaves, J. W.
*Hicks, A. W.

Lindeman, G.
Lion, Rosine
Malcolm, Olive M.
*McIlwraith, W. D.
McLennan, S.
*Parker, E. H. W.
Pitt, C. M.

*Roberts, W.
Robertson, N. K.
See, H. C. M.
Simpson, R. J.
Stokes, S. W.
Thompson, E. G.
Webb, J. E.

Pass, March, 1906 (alphabetical).

Blaxland, F.
Bundock, H. C.
Cosgrove, C.

Fry, H. W.
Norman, K. D.
Poggioli, H. H.

Sherwin, T. A.
Silvester, V. H.
Wall, W. T. S.

LATIN.

Pass, December, 1905.

Utz, H. S.
Cohen, Fanny
Brodziak, Birdie K.
*Lowe, M. H.

Snow, S. B.
Watts, Ethel L.
*Curry, J. N.
Lane, G. T.

Lodder, Nelly } æq.
Marks, Gladys H. } æq.
Kenny, J. P.
Light, Hilda V.

* Evening Student.

Latin—*continued.*

Browning, R. H. } æq.
Small, Ethel M. }
Bennett, Tib S. } æq.
Stack, W. J. }
Laurence, R. L. } æq.
*Miles, B. J. V. }
Henry, C.
Vickers, L.
Wyndham, Ethel M.
Woodlands, Mabel R.
*Collins, Lillian } æq.
Edwards, H. G. }
Gourlay, Mary E. F.
*Douglass, A. H. } æq.
Vine Hall, A. }
Pocock, R. B. }
*Ranson, J. R.
Bates, A. W.
Alexander, Hilda
Densley, Lucy N.
Duesbury, Elsie M. P.

*Cusbert, A. W.
Croft, Edith } æq.
Fallon, C. J. }
Byrne, G. C. } æq.
McElhone, F. E. }
Malcolm, Olive M. } æq.
*McKean, A. }
Webb, J. E. }
*Crane, C. C.
*Lynch, J.
Flower, Emily M.
Morris, E. S.
*Forsyth, W. } æq.
Rudder, L. B. }
Fry, H. W.
Russell-Young, H.
*Short, F. } æq.
*Swain, Edith M. }
Norman, K. D.
Marsh, A. M.

Shellshear, G. W. } æq.
Walker, J. }
Aspinall, A. M.
*Hunt, W. E.
Kesteven, H. L.
Lion, Rosine } æq.
Roseby, Clara }
Sinclair, G. W.
Jopling, Mildred H.
Finley, C. A.
*Barlex, H. N. C. } æq.
Booth, F. S. }
De Putron, Violet
Whyte, H. W.
*Olsen, J. M. S.
Lindeman, G. B.
See, H. C. M.
*Hall, A. W. C.
*Geer, Lillian
*Gombert, F.
*Leavers, C. W.

Pass, March, 1906 (alphabetical).

*Abrams, R. O.
Blaxland, F.
Bowman, Myril McD.
Bray, G. W.
Cosgrove, C.
Deffell, Alice H.
Dent, O. G.
Dickson, Nora L.
Fitz, Blanche
Fitzpatrick, Mabel D.

Hammand, C. A.
*Hicks, A. W.
Ives, Margaret
*Lovell, Mildred
McKibbin, Rachel
McLennan, S.
Pitt, C. N.
Pridham, Alice M.
Robertson, N. K.

Sherwin, T. A.
Silvester, V. H.
Simpson, R. I.
Stafford, A. L.
Stokes, S. W.
Thomson, E. G.
Vance, E. B. M.
Wall, W. T. S.
*Wooster, F. C.

GREEK.

Pass, December, 1905.
(Order of Merit.)

Browning, R. H.
Vickers, L.

Pocock, R. B.
Sherwin, T. A.

Whyte, H. W.
Walker, J.

Pass, March, 1906.

Pitt, C. N.

JUNIOR FRENCH.

Pass, December, 1905.

Harrison, B. J. M.
Cohen, Fanny
Wyndham, Elinor M.
*Lowe, M. H.
Young, H. R.

*Douglass, A. H.
Watts, Ethel L.
*Dick, Lily J. } æq.
Kenny, J. P. }
Henry, C.

Bennett, Tib S.
*Ranson, J. R.
Light, Hilda V.
Woodlands, Mabel R.
Marsh, Alison M.

* Evening Student.

Junior French—*continued.*

Densley, Lucy N.
Lane, G. T.
*Swain, Edith M. M.
Laurence, R. L.
Pridham, Alice M. } æq.
Sinclair, G. W. }
Gourlay, Mary E. F.
*McKean, A.
*Miles, B. J. V.
Small, Ethel M.
Silvester, V. H.
*Cusbert, A. W.
Vance, E. B. M.

Roseby, Clara
McElhone, F. E. } æq.
Duesbury, Elsie M. P. }
*Barlex, H. N. C.
Fry, H. W.
Flower, Emily M.
*Lynch, J.
Alexander, Hilda
Ives, Margaret
Rudder, L. B. } æq.
*Short, F. }
*Hunt, W. E.

Stack, W. J.
Shellshear, W. G.
Simpson, R. I.
Webb, J. E. } æq.
*Olsen, J. M. S. }
*Forsyth, W.
Morris, E. S.
*Wooster, F. C.
*Crane, C. C.
Edwards, H. G.
*Abrams, R. O.
*Quirk, F. P.

JUNIOR FRENCH.

Pass, March, 1906 (alphabetical).

Aspinall, A. M.
Bates, A. W.
Blaxland, F.
Booth, F. S.
Bowman, Myril MacD.
Bray, G. W.
Bundock, H. C.
Byrne, G. C.
Cosgrove, C.
*Curry, J. N.

Deffell, Alice H.
De Putron, Violet N.
Dickson, Nora L.
Findley, C. A.
Fitz, Blanche
Fitzpatrick, Mabel D.
*Hicks, A. W.
Kesteven, H. L.
Lindeman, G. B.
McKibbin, Rachel

Norman, K. D.
Pratt, Annie M.
Robertson, N. K.
See, H. C. M.
Stokes, S. W.
*Taylor, R. C.
Thomson, E. G.
Wall, W. T. S.
Wilkinson, L. V.
*Wooster, F. C.

JUNIOR GERMAN.

Pass, March, 1906.

McLennan, S.

MATHEMATICS.

Pass, December, 1905 (alphabetical).

Alexander, Hilda
Archdall, H. K.
Bates, A. W.
Bennett, Tib. S.
Brodziak, Birdie K.
Browning, R. H.
Castlehow, S.
Chapman, B. B.
Cohen, Fanny
Croft, Edith
Deffell, Alice H.
Densley, Lucy N.
De Putron, Violet
Duesbury, Elsie M. P.
Edwards, H. G.
Fallon, C. J.

Fitzpatrick, Mabel D.
Flower, Emily M.
Fry, H. W.
Gourlay, Mary E. F.
Vine Hall, A.
Harrison. B. J. M.
Henry, C.
Jopling, Mildred H.
Kenny, J. P.
Lane, G. T.
Light, Hilda V.
McElhone, F. E.
McGill, A. D.
Malcolm, Olive M.
Marks, Gladys H.
Marsh, Alison M.

Mitchell, Clarice
Morris, E. S.
Pocock, R. B.
Pridham, Alice M.
Shellshear, W. G.
Silvester, V. H.
Sinclair, G. W.
Small, Ethel M.
Snow, S. B.
Stack, W. J.
Thompson, E. G.
Tomkinson, W.
Utz, H. S.
Vickers, L.
Walker, J.
Wall, W. T. S.

* Evening Student.

Mathematics—*continued.*

Watts, Ethel L.	Wilkinson, L. V.	Young, H. R.
Webb, J. E.	Woodlands, Mabel R.	
Whyte, H. W.	Wyndham, Elinor M.	

EVENING STUDENTS.

Pass, December, 1905 (alphabetical).

Abrams, R. O.	Grey, T. H.	†Montgomerie, W. H.
Barlex, H. N. C.	Hall, W. M. C.	†Parker, E. H. W.
†Bussmann, F.	Hicks, A. W.	Ranson, J. R.
†Carne, H. B.	Hunt, W. E.	Roberts, W.
Collins, Lillian	Leavers, C. W.	†Smith, A. M.
Curry, J. N.	Lovell, Mildred	Stephen, J. N.
Cusbert, A. W.	Lowe, M. H.	†Thompson, W. A.
Douglass, A. H.	†Mahoney, W. A.	Wooster, F. C.
Geer, Lillian E.	Miles, B. J. V.	
Gombert, F.	Monro, J. P.	

Pass, March, 1906 (alphabetical).

Aspinall, A. M.	Ives, Margaret	Robertson, N. K.
Blaxland, F.	Laurence, R. L.	Roseby, Clara
Booth, F. S.	Lindeman, G. B.	See, H. C. M.
Bowman, Myril MacD.	Lion, Rosine	Sharp, P. J.
Bray, G. W.	Lodder, Nelly	Sherwin, T. A.
Bundock, H. C.	McKibbin, Rachel	Simpson, R. I.
Byrne, G. C.	McLennon, S.	Stafford, A. L.
Cosgrove, C.	Norman, K. D.	Stokes, S. W.
Finley, C. A.	Pitt, C. N.	Vance, E. B. M.
Fitz, Blanche	Poggioli, H. H.	

EVENING STUDENTS.

Pass, March, 1906 (alphabetical).

†Cane, P. F.	Grey, E. E.	†Quirk, F. P.
†Cox, P. B.	McIlwraith, W. D.	
Dick, Lily J.	†Morris, W. A.	

CHEMISTRY.

Class Examination, May, 1905.

Pass (Order of Merit.)

Class I.	Class II.	
Castlehow, S.	Pocock, R. B.	Flower, Emily M. } æq.
Watts, Ethel L. } æq.	Croft, Edith	Henry, C. } æq.
Archdall, H. K. } æq.	Whyte, H. W.	Sinclair, G. W.
Lane, G. T.	McElhone, F. E.	Utz, H.
Cohen, Fanny	Alexander, Hilda	Kenny, J.
Harrison, B. J. M. } æq.	Brodziak, Birdie K.	Young, H. R. } æq.
Fallon, C. J. } æq.	Browning, R. H.	Snow, S. B. } æq.
McGill, A. D.	Perry, Irene F. B.	See, H. C. M. } æq.
		Kesteven, H. L. } æq.
		Hall, A. V.
		Shellshear, G. W.

* Evening Students. † Unmatriculated.

Satisfied the conditions of By-laws, Chap. xv., Sec. 13 (alphabetical).

Bates, A. W.
Bennett, Tib. S.
Blaxland, F.
Booth, F. S.
Bowman, Myril MacD.
Carruthers, E. S. W.
Chapman, B. B.
Deffell, Alice H.
De Putron, Violet
Duesbury, Elsie M. P.
Edwards, H. G.
Fitzpatrick; Mabel D.
Fry. H. W.
Jopling, Mildred H.
Laurence, R. L.
Light, Hilda V.
Lodder, Nelly
Malcolm, Olive M.
Marks, Gladys H.
Marsh, Alison M.
McKibbin, Rachel
Mitchell, Clarice
Morris, E. S.
Norman, K. D.
Pridham, Alice M.
Poggioli, H. H.
Roseby, Clara
Sharp, P. J.
Silvester, V. H.
Simpson, R. I.
Small, Ethel M.
Stack, W. J.
Stokes, S.
Thomson, E. G.
Tomkinson, W.
Vance, E. B. M.
Vickers, L
Wall, W. T. S.
Webb, J. E.
Woodlands, Mabel R.
Wyndham, Elinor M.

December, 1905 (alphabetical).

Aspinall, A. M.
Bundock, H. C.
Densley, Lucy Norma
Dent, O. G.
Dickson, Nora L.
Fitz, Blanche
Gourlay, Florence
Ives, Margaret
Lion, Rosine
Lindeman, G. T.
McLennan, S.
Newmarch, R L.
Pitt, C. N.
Sherwin, T. A.
Sinclair, E. A.
Walker, J.
Wilkinson, L. V.

March, 1906.

Byrne, G. C.
Stafford, A. L.

EVENING STUDENTS.

December, 1905. Pass (Order of Merit.)

Cusbert, A. W.
Grey, E. E.
Lowe, M. H. } æq.
Lynch, J. } æq.
Moore, H. E.
Ranson, J. R.
Barlex, H. N. C.
Burke, J. J.
Tarrant, T. A.
Abrams, R. O.
Lovell, Mildred
Miles, B. J. V.
Grey, T. H.
Chandler, H.
Douglass, A. H.
Crane, C. C.
Mahoney, W.
Hall, W. M. C.
Morris, W. A.
Parker, E. H. W. } æq.
Taylor, R. C. } æq.

Satisfied the conditions of By-laws, Chap. xv., Sec. 13.

Binns, K.
Brown, J.
Burns, A. L.
Bussmann, F.
Cane, P. F.
Cantrell, S. W.
Carne, H.
Cowie, H.
Cox, P. B.
Collins, Lillian
Curry, J. N.
Dick, Lily J.
Forsyth, W.
Geer, Lilian E.
Giltinan, R.
Gombert, F.
Gowing, E. N.
Hicks, A. W.
Hunt, W. E.
Laird, H. H.
Leavers, C. W.
McIlwraith, W. D.
McMinn, W.
Mann, J. W.
Milligan, H. A.
Monro, J. P.
Montgomerie, W. H.
Otton, D. K.
Quirk, F. P.
Roberts, W.
Scrivener, L. L.
Short, F.
Smith, A. M.
Sproule, R.
Stephen, J. N.
Swain, Edith M. M.
Thompson, W. A.
Wooster, F. C.

PHYSICS.

Class Examinations, August, 1905.

Pass (Order of Merit).

Snow, S. B. } æq.
Castlehow, S. }
Watts, Ethel L.
Jopling, Mildred H.
Young, H. R.
Lane, G. T.
Mitchell, Clarice
Silvester, V. H.
Bowman, Myril MacD.
Kesteven, H. L.
Densley, Lucy N. }
Bates, A. W. } æq.
Alexander, Hilda } æq.
Sinclair, G. W. }
Wyndham, Elinor M.
Duesbury, Elsie M. P.
Henry, C. }
Croft, Edith } æq.
Utz, H. S. }
Vance, E. B. M. }
McElhone, F. E. } æq.
Perry, Irene F. B. }
Browning, R. H. }
Stack, W. J. } æq.
De Putron, Vera }

Whyte, H. W.
Chapman, B. B.
Simpson, R. I. } æq.
Walker, J. }
Laurence, R. L. }
Wilkinson, L. V. }
Fallon, C. J. } æq.
Marsh, Alison Mary } æq.
Fitzpatrick, Mabel }
Fry, H. W. }
Pocock, R. B. } æq.
Vine Hall, A. } æq.
Roseby, Clara }
Woodlands, Mabel }
Flower, Emily M. } æq.
Brodziak, Birdie K. }
McGill, A. D. }
Vickers, L. }
Lion, Rosine } æq.
Sharp, P. J. } æq.
Fitz, Blanche }
Aspinall, A. M. }
Marks, Gladys H. } æq.
Tomkinson, W. } æq.
Bennett, Tib. S. }

See, H. C. M. }
Ives, Margaret }
Dickson, Nora L. }
Malcolm, Olive M. }
Stokes, S. }
Bundock, H. C. }
McKibbin, Rachel }
Pridham, Alice M. }
Lindeman, G. B. }
Dent, O. G. }
Gourlay, Mary E. F. } æq.
Light, Hilda V. } æq.
Kenny, J. P. }
Booth, F.S. }
Sherwin, T. A. }
Cohen, Fanny M. }
Morris, E. S. }
Blaxland, F. }
Deffell, Alice H. }
Lodder, Nelly }
Small, Ethel M. }
Harrison, B. J. M. }
Archdall, H. K. }

Pass, December, 1905.

McLennan, S.
Norman, K. D.
Pitt, C. N.

Poggioli, H. H.
Shellshear, W. G.

Thomson, E. G.
Wall, W. T. S.

Pass, March, 1906.

Byrne, G. C.

Stafford, A. W.

Webb, J. E.

PHYSIOGRAPHY.

Passed with Distinction, December, 1905.

Brodziak, Birdie K.
De Putron, Violet

Croft, Edith }
Young, H. R. } æq.
Kesteven, H. L. }

Sherring, Beatrice A. S. (Sci.)
Harrison, B. J. M.

Passed with Credit.

Wyndham, Elinor M.
Light, Hilda V.
Sinclair, G. W.
George, S. (Sci.)
Vance, E. B. M.
Cohen, Fanny M.
Deer, Margaret (Sci.)

Bateman, J. E. (Sci.) } æq.
Wilkinson, L. V. } æq.
Edwards, R. C. (Sci.)
Flower, Emily M.
Breakwell, E. A. (Sci.)

Henry, C. } æq.
Farran-Ridge, C. } æq.
†Stokes, Marian E.
Tomkinson, W.
Webb, J. E.

* Unmatriculated.

Results of Class or Note-book Examinations in Physiography.
November, 1905.
Pass (Order of Merit).

Young, H. R.
De Putron, Violet
Roseby, Clara
Brodziak, Birdie K. } æq.
Alexander, Hilda } æq.
Malcolm, Olive } æq.
Jopling, Mildred H. } æq.
Wyndham, Elinor M } æq.
Lane, G. T.
Croft, Edith
Kesteven, H. L.
Harrison, B. J. M.
Vance, E. B. M.
Light, Hilda V.
Cohen, Fanny } æq.
Ives, Margaret } æq.
Pridham, Alice M. } æq.
Snow, S. B. } æq.
Sinclair, G. W. } æq.
Fitzpatrick, Mabel D.
Laurence, R. L.
Silvester, V. H.
Hall, A. Vine
Duesbury, Elsie M. D.
Bennett, Tib. S.
Densley, Lucy N.
Woodlands, Mabel R.
Vickers, L.
Wilkinson, L. V.

Booth, F. S.
Fallon, C. J. } æq.
Sinclair, E. A. } æq.
Utz, H. S. } æq.
Marsh, Alison Mary
Bowman, Myril McD.
Dickson, Nora L.
Flower, Emily M.
Shellshear, W. G.
Deffell, Alice H.
Gourlay, Florence
Morris, E. S.
McElhone, F. E.
Bates, A. W.
Pocock, R. B.
Sherwin, T. A.
Chapman, B. B.
Fitz, Blanche } æq.
McKibbin, Rachel } æq.
Watts, Ethel L. } æq.
Archdall, H. K.
Small, Ethel
Mitchell, Clarice
Byrne, G. C.
McLennan, S.
Webb, J. E.
Castlehow, S.
Aspinall, A. M. } æq.
Fry, H. W. } æq.
Henry, C. } æq.
Stack, W. J. } æq.

Whyte, H. W.
Lyon, Rosine
Kenny, J. P.
Marks, Gladys H.
†Stokes, Marion E.
Lindeman, G. B.
Pitt, C. N.
Sharp, P. J.
Thomson, E. G.
Browning, R. H.
Lodder, Nelly
Gale, J. T. W.
Norman, K. D.
Dent, O. G. } æq.
McGill, A. D. } æq.
Wall, W. T. S. } æq.
Poggioli, H. H. } æq.
Stokes, S. } æq.
Walker, J. } æq.
Newmarch, R. L.
See, H. C. M.
Tomkinson, W.
Bundock, H. C.
Blaxland, F. J.
Simpson, R. I.
Stafford, A. L.
Hammand, C. A.

* Unmatriculated.

FACULTY OF ARTS.

SECOND YEAR EXAMINATION.

December, 1905, and March, 1906.

COOPER SCHOLARSHIP No. I. FOR CLASSICS—B. M. J. Schleicher.

BARKER SCHOLARSHIP No. I. AND NORBERT QUIRK PRIZE FOR MATHEMATICS—H. L. Watkins

GARTON SCHOLARSHIP No. II. FOR FRENCH AND GERMAN—Not awarded.

PROFESSOR MACCALLUM'S PRIZE FOR ENGLISH ESSAYS—Aphra F. Scroder.

PROFESSOR ANDERSON'S PRIZE FOR LOGIC AND MENTAL PHILOSOPHY—W. P. Stewart.

HONOUR LISTS.

LATIN.

Class I.

Schleicher, B. M. J.

Class II.

McKeown, F. M.

Class III.

Jones, Grace E.

GREEK.

Class I.

Schleicher, B. M. J.
McKeown, F. M.

SENIOR FRENCH.

Class I.

Paxton, Grace

LOGIC AND MENTAL PHILOSOPHY.

Class I.

Stewart, W. P.

Class II.

Gordon, G. A.
Deane, W.
North, F.

ENGLISH.

Class I.

Scroder, Aphra F.

Class II.

North, F.

Class III.

Howard, Vera

HISTORY.

Class II.

McKeown, F. M.

Class III.

Dunlop, Mabel L.

MATHEMATICS.

Class I.

Watkins, H. L.
Carter, H. G. (Eng.)

Class II.

Dennis, S. (Eng.)
*Brown, J.

* Evening Student.

The following have completed the Second Year Examination (alphabetical).

Badman, Gladys E.
Booth, Irene M.
Brierley, Nina B.
*Brown, J.
*Cantrell, S. W.
*Chandler, H.
Clayton, H. J. R.
Clouston, Lavinia
*Cole, A. G.
*Cowie, H.
Culpin, Daisy E.
David, Margaret E.
*Davies, E. S.
Deane, W.
Dunlop, Mabel L.
Edwards, Dorothea
Fidler, Ethelwyn
French, B. R.
Fry, Eva J.
Garnock, R. C. D.
Gordon, G. A.
*Gowing, E. N.
Greville, Minnie
Hamilton, J. S.
Harker, Mabel
Howard, Vera
Jackson, Elizabeth
Jones, Grace E.
Jones, J. R.
King, C. A Z.
*Laird, H. H.
Lydall, J. F.
*McDonald, W.
McKean, L. J.
McKeown, F. M.
*Mackaness, G.
Maclardy, Margaret McI. St. C.
Martin, Laura M.
Mills, A. J.
Minter, C.
*Moore, H. E.
Nimmo, W. M.
Noad, Emma A.
North, F.
Palmer, A. B.
Paxton, Grace
Pearce, W. T. L. A.
*Philip, F. C.
Ralston, A. W.
*Reynolds, A. J.
*Rickard, J. C.
Robinson, Katherine
Robinson, Mabel H.
Schleicher, B. M. J.
Scroder, Aphra F.
Smithers, Margery A.
Sproule, R.
Stanton-Cook, Millicent
Stewart, W. P.
*Tarrant, T. A.
Teece, A. H.
Tietkins, Emily Mary
Wallach, Henriette
Ward, Bertha R.
Watson, L. G. H.
Willis, C. G.
Young, Hilda M.

Order of Merit in Individual Subjects.

ENGLISH.

Pass, December, 1905.

Culpin, Daisy E.
*Mackaness, G.
Ward, Bertha R. } æq.
Dunlop, Mabel L. }
Schleicher, B. M. J.
McKeown, F. M.
David, Margaret E.
*Chandler, H.
Willis, C. G.
Clouston, Lavinia
Paxton, Grace E.
French, B. R.
Badman, Gladys E. } æq.
*Moore, H. E. }
Nimmo, W. M. } æq.
Watson, L. G. H. }
*Davies, E. S.
Jones, Grace E.
Booth, Irene M.
Deane, W.
*Philip, F. C.
*Tarrant, T. A.
*Cole, A. G.
Brierley, Nina B.
Stewart, W. P.
Edwards, Dorothea
Young, Hilda M.
Hamilton, J. S.
Wallach, Henriette
Gordon, G. A. } æq.
Palmer, A. B. }
Robinson, Mabel H.
Ewing, T.
Stanton-Cook, Millict. I.
Tietkins, Emily M.
*Berry, D. A.
Harker, Mabel
*Laird, H. H. } æq.
Dunstan, Kathleen }
*Rickard, J. C.
Fry, Eva J. } æq.
Robinson, Katherine }
*McKean, L. J
Lydall, J. F.
Jones, J. R.
Fidler, Ethelwyn } æq.
Teece, A. H. }
Ralston, A. W.
Smithers, Margery A.
Davis, Isabel R. H.
Crane, Bertha E.
Mills, A. J.

Pass, March, 1906 (alphabetical).

Clayton, H. J. R.
Greville, Minnie
*Gowing, E. N.
*Harvey, R. F.
Jackson, Elizabeth
King, C. A. Z.
*McDonald, W.
Maclardy, Margaret McI. St. C.
Martin, Laura M.
Minter, C.
Noad, Emma A.
Pearce, W. T. L. A.
*Reynolds, A. J.
*Sproule, R.

* Evening Students.

LATIN.

Pass, December, 1905.

Scroder, Aphra F.
Pearce, W. T. L. A.
Booth, Irene M.
Palmer, A. B. } æq.
Noad, Emma A. } æq.
*Chandler, H. } æq.
Dunlop, Mabel L.
*Davies, E. S.
Wallach, Henriette } æq.
Nimmo, W. M. } æq.
*Moore, H. E.
Willis, C. G.
Paxton, Grace
Gordon, G. A.
*Cole, A. G.
Martin, Laura M.
Howard, Vera
Brierley, Nina B.
Fry, Eva J.
Badman, Gladys E.
*Tarrant, T. A.
Tietkins, Emily M.
*Smith, C. P.
*Reynolds, A. J.
Fidler, Ethelwyn
*Laird, H. H.
Clouston, Lavinia } æq.
Smithers, Margy. A. } æq.
Edwards, Dorothea
*Cowie, H.
Lydall, J. F.
Robinson, Katherine
*McKean, L. J.
Garnock, R. C. D.
*Philip, F. C.
*Rickard, J. C.
Culpin, Daisy E.
Greville, Minnie
Harker, Mabel
*Mackaness, G.
Ralston, A. W.

Pass, March, 1906 (alphabetical).

*Brown, J.
*Cantrell, S. W.
Clayton, H. J. R.
French, B. R.
*Gowing, E. N.
Hamilton, J. S.
*Harvey, R. F.
Jackson, Elizabeth
Jones, J. R.
King, C. A. Z.
*McDonald, W.
Maclardy, Margaret McI. St. C.
Minter, C.
Robinson, Mabel H.
*Sproule, R.
Stanton-Cook, Millicent
Teece, A. H.
Watson, L. G. H.
Young, Hilda M.

GREEK.

Pass, December, 1905.

Mills, A. J.
Watson, L. G. H.

MATHEMATICS.

Pass, December, 1905 (alphabetical).

Booth, Irene M.
Jones, Grace E.

EVENING STUDENTS.

Brown, James
Cantrell, S. W.

Pass, March, 1906 (alphabetical).

Clouston, Lavinia
*Cowie, H.
Maclardy, Margaret McI. St. C.
Martin, Laura M.

SENIOR FRENCH.

Pass, December, 1905.

Brierley, Nina B.
*Chandler, H.
Ward, Bertha R.
Fry, Eva J.
*Tarrant, T. A.
David, Margaret E.
Garnock, R. C. D.
Booth, Irene M.
Culpin, Daisy E.
*Mackaness, G.
Howard, Vera
*Cole, A. G. } æq.
*Davies, E. S. } æq.
Noad, Emma A.
Robinson, Katherine
*Brown, J.
*Philip, F. C.
Scroder, Aphra F.
Young, Hilda M.
Greville, Minnie
King, C. A. Z.
Badman, Gladys E.

* Evening Students.

Pass, March, 1906 (alphabetical).

*Cantrell, S. W.
Clouston, Lavinia
*Cowie, H.
Davis, Isabel R. H.
Edwards, Dorothea
Jackson, Elizabeth
*Laird, H. H.
Maclardy, Margaret McI. St. C.
Martin, Laura M.
*Reynolds, A. J.
Robinson, Mabel H.
Smithers, Margery A.
Stanton-Cook, Millicent
Tietkins, Emily Mary
Wallach, Henriette

LOGIC AND MENTAL PHILOSOPHY.

Pass, December, 1905.

Mills, A. J.
Dunlop, Mabel L.
Teece, A. H.
Badman, Gladys E.
Fry, Eva J.
Ralston, A. W.
Willis, C. G.
Palmer, A. B.
Pearce, W. T. L. A.
Fidler, Ethelwyn
Jackson, Elizabeth
Lydall, J. F.
Nimmo, W. M.
Minter, C.
Clayton, H. J. R.
Garnock, R. C.
Harker, Mabel
French, B. R.

EVENING STUDENTS.

Moore, H. E.
Chandler, H.
Tarrant, T. A.
Mackaness, G.
Brown, J.
Davies, E. S.
McKean, L. J.
Philip, F. C.
Rickard, J. C.
Laird, H. H.
Sproule, R.
Reynolds, A. J.
Cole, A. G.
Cowie, H.
McDonald, W.
Cantrell, S. W.

Pass, March, 1906 (alphabetical).

Ash, L. F.
Edwards, Dorothea
*Gowing, E. N.
Hamilton, J. S.
Jones, J. R.
King, C. A. Z.
Noad, Emma A.
Read, T. W. V.
Ward, Bertha R.

HISTORY.

Honours Candidates, December, 1905.

Pass.

Culpin, Daisy E.
Willis, C. G.
Brierley, Nina B. } æq.
Palmer, A. B. }

PASS STUDENTS.

Pass.

French, B. R.
Schleicher, B. J. M.
Scroder, Aphra F.
Lydall, J. F.
David, Margaret E.
Pearce, W. T. L. A.
Stewart, W. P.
Deane, W.
North, F.
Teece, A. H.
Moore, H. E.
Rickard, J. C.
West, W. M.
Howard, Vera
Robinson, Mabel H.
Ward, Bertha R.
} æq.

* Evening Students.

Pass, March, 1906 (alphabetical).

*Berry, D. H.
Clayton, H. J. R.
Garnock, R. C. D.
Gordon, G. A.
*Gowing, E. N.
Greville, Minnie
Hamilton J. S.
Jones, J. R.
*McDonald, W.
*McKean, L. J.
Mills, A. J.
Minter, C.
Nimmo, W. M.
Paxton, Grace
Smithers, Margery A.
*Sproule, R.
Stanton-Cook, Millicent
Wallach, Henriette
Watson, L. G. H.

* Evening Students.

FACULTY OF ARTS.

THIRD YEAR EXAMINATION.

December, 1905, and March, 1906.

UNIVERSITY MEDAL FOR CLASSICS—M. L. MacCallum.
UNIVERSITY MEDAL FOR MATHEMATICS—R. J. Lyons.
UNIVERSITY MEDAL FOR LOGIC AND MENTAL PHILOSOPHY—H. T. Lovell.
FRAZER SCHOLARSHIP FOR HISTORY—G. C. Whitney.
JAMES COUTTS SCHOLARSHIP FOR ENGLISH—M. L. MacCallum (resigned). Constance A. Bellhouse.
PROFESSOR ANDERSON'S CLASS PRIZE FOR LOGIC AND MENTAL PHILOSOPHY—H. T. Lovell.
PROFESSOR MACCALLUM'S PRIZE FOR ENGLISH—M. L. MacCallum.

HONOUR LISTS.

LATIN.

Class I.
MacCallum, M. L.

Class II.
Clark, Marjorie D.
Watson, Maria E.

GREEK.

Class I.
MacCallum, M. L.
Watson, Maria E.

LOGIC AND MENTAL PHILOSOPHY.

Class I.
*Lovell, H. T.
Portus, G. V.
Whitney, G. C.

Class II.
McLean, A. L.
Jones, E. D. L.
Parsons, Florence L.
*†Ross, J. A.
*Bourke, J. O. A.

ENGLISH.

Class I.
MacCallum, M. L.
Bellhouse, Constance A.

SENIOR FRENCH.

Class I.
McIntosh, A. M.
*Lovell, H. T., *prox. acc.*

Class II.
*Bourke, J. O. A.

Class III.
McLean, A. L.
*Coleman, E. A.

SENIOR GERMAN.

Class I.
McIntosh, A. M.

PHYSICS.

(See under Faculty of Science.)

MATHEMATICS.

Class I.
Lyons, R. J.
Cotton, L. A. (Sci.) } æq.
Lusby, S. G. } æq.
Mottershead, A. } æq.

Class II.
*Collins, C. M. } æq.
Chrismas, C. H. } æq.
McIntosh, A. M. } æq.

Class III.
Bourne, Florence I. } æq.
Roughton, Gladys M. } æq.
*Walker, C. C. P. } æq.

HISTORY.

Class I.
Whitney, G. C.

Class II.
Leeson, Ida E.

Class III.
Bourne, Florence I.

* Evening Student. † Unmatriculated.

The following have completed the Third Year Examination (alphabetical).

*Anderson, R.
Bellhouse, Constance A.
*Bourke, J. O. A.
Bourne, Florence I.
Chrismas, C. H.
Clark, Marjorie D.
Coen, F.
*Coleman, E. A.
*Collins, C. M.
Cotton, L. A.
Davies, Isobel
Debenham, F.
Debenham, Jessie
Fitzhardinge, Julie G.
*Fraser, G.
Futter, V. F.
*Gale, C. A.
Hall, Dorothy Vine
Hertzberg, M.
Holden, Florence M.
Hollingdale, B. A.
Hughes, John
Jones, E. D. L.
Kaeppel, Andrée A.
Leeson, Ida E.
Lennox, Edith
*Lovell, H. T.
*Loxton, F. E.
Lusby, S. G.
Lyons, R. J.
MacCallum, M. L.
MacFarlane, Laurie M.
McIntosh, A. M.
McKie, E. N.
McLean, A. L.
*Middleton, R. J.
Mottershead, A.
Moylan, William P.
Murray-Prior, Ruth A.
*Newton, R. G.
*Noake, A. R.
Noake, S. C.
Parsons, Florence L.
*Penman, L. E.
Portus, G. V.
Redgrave, H. W.
Rhodes, Alice O. R
Roughton, Gladys M.
*Shortland, P. D.
Smith, Nellie May
*Smith, S. C.
Sparling, Lillian G.
*Terry, F.
*Tremlett, C. E. G.
Walker, A. D.
*Walker, C. C. P.
Watson, Maria E.
*Watt, T. E.
*Waring, H. R.
Webb, B. L.
Whitney, G. C.

Order of Merit in Individual Subjects.

ENGLISH.

Pass, December, 1905.

Jones, E. D. L.
Whitney, G. C.
Kaeppel, Andrée A.
Murray-Prior, Ruth A. } æq.
Parsons, Florence L. } æq.
Portus, G. V.
Rhodes, Alice O. R.
Clark, Marjorie D. } æq.
Leeson, Ida E. } æq.
McLean, A. L. } æq.
Lennox, Edith
Holden, Florence M. } æq.
Webb, B. L. } æq.
Debenham, Jessie
Watson, Maria E.
Sparling, Lillian G.
*Noake, A. R. } æq.
*Terry, F. } æq.
Debenham, F.
Fitzhardinge, Julie G.
McKie, E. N. } æq.
*Newton, R. G. } æq.
MacFarland, Laurie M.
Hall, Dorothy Vine

Pass, March, 1906 (alphabetical).

*Anderson, R.
Moylan, W. P.
Smith, Nellie M.
Walker, A. D.

LATIN.

Pass, December, 1905.

*Waring, H. R.
*Smith, S. C.
Hollingdale, B. A.
Bourne, Florence I.
Davies, Isobel
*Lovell, H. T.
Chrismas, C. H.
Sparling, Lillian G.
*Shortland, P. D.
Lennox, Edith } æq.
Roughton, Gladys M. } æq.
Fitzhardinge, Julie G.
*Walker, C. C. P.
Redgrave, H. W.
*Loxton, F. E.
Noake, S. C.
MacFarlane, Laurie M.
*Noake, A. R.

* Evening Student.

Pass, March, 1906 (alphabetical).

*Anderson, R.	Moylan, W. P.	*Tremlett, F. C. G.
*Gale, C. A.	*Penman, L. E.	

GREEK.

Pass, December, 1905.

Jones, Grace E.	McKie, E. N.	æq.
	Fitzhardinge, Julie G.	

MATHEMATICS.

Pass, December, 1905 (alphabetical).

EVENING STUDENTS.

Bourke, J. O. A.	Collins, C. M.	Middleton, R. J.

Pass, March, 1906 (alphabetical).

Coleman, E. A.	Tremlett, F. C. G.

FRENCH.

Pass, December, 1905.

*Smith, S. C.	Leeson, Ida E.	*Gale, C. A.
Lusby, S. G.	Chrismas, C. H.	*Terry, F.
Whitney, G. C.	*Middleton, R. J. (æq.)	*Newton, R. G.
Kaeppel, Andrée A.	*Fraser, G. (æq.)	*Walker, C. C. P.
Parsons, Florence L.	Clark, Marjorie D.	Vine Hall, Dorothy
Holden, Florence M.	Murray-Prior, Ruth A. (æq.)	
*Collins, C. M.	Rhodes, Alice O. R. (æq.)	
Bellhouse, Constance A.	Davies, Isobel	
Debenham, Jessie		

Pass, March, 1906 (alphabetical).

*Loxton, F. E.	Redgrave, H. W.	Smith, Nellie M.
Noake, S. C.	Roughton, Gladys M.	

LOGIC AND MENTAL PHILOSOPHY.

Pass, December, 1905.

*Smith, S. C.	Webb, B. L.	*Toose, S. V.
*Middleton, R. J.	*Newton, R. G.	Davies, Isobel
*Watt, T. E.	*Tremlett, F. G. M.	*Coleman, E. A.
Hertzberg, M.	*Collins, C. M.	*Shortland, P. D.
*Fraser, G.	*Noake, A. R.	*Penman, L. E.
Debenham, F.	Walker, A. D.	*Loxton, F. E.
Holden, Florence M.	McKie, E. N.	
Chrismas, C. H.	*Terry, F.	

Pass, March, 1906 (alphabetical).

*Anderson, R.	*Graham, A. N.	Noake, S. C.
*Gale, C. A.	Moylan, W. P.	

* Evening Students.

HISTORY.

Pass, December, 1605.

Kaeppel, Andrée A.
Portus, G. V.
Lennox, Edith } æq.
Bellhouse, Const. A. }
Hughes, J. } æq.
Jones, E. D. L. }

Webb, B. L.
Murray-Prior, Ruth A.
Debenham, Jessie
Debenham, F.
Coen, F.
Sparling, Lillian G.

Rhodes, Alice O. R.
Walker, A. D.
Futter, V. S.

EVENING STUDENTS.

Pass.

Penman, L. E. | Shortland, P. D.

Pass, March, 1906 (alphabetical).

Hall, Dorothy Vine
MacFarlane, Laurie M.

Redgrave, H. W.

Smith, Nellie M.

FACULTY OF ARTS.

M.A. EXAMINATION.

March, 1906.

SCHOOL OF MATHEMATICS.

Weatherburn, C. E. } æq. (First-class Honours and University Medal).
Wellisch, E. M. }

SCHOOL OF PHILOSOPHY.

Pass.

Arthur Castleman.

Thesis—Reason and Faith in the Sphere of Religion.

SCHOOL OF MODERN LITERATURE.

Mallarky, Ethel M. (Second-class Honours in English, including one section of History).

SCHOOL OF MODERN HISTORY.

Cramp, Karl R. (Second-class Honours).

FACULTY OF LAW.

INTERMEDIATE LL.B. EXAMINATION.

March, 1906.

WIGRAM ALLEN SCHOLARSHIP FOR SECTION I:—J. Spence, B.A. } æq.
E. H. Thompson }

GEORGE AND MATILDA HARRIS SCHOLARSHIP FOR SECTION II.—
F. R. Jordan, B.A. } æq.
E. T. Real, B.A. }

PROFESSOR COBBETT'S PRIZE FOR THE ELEMENTS OF POLITICAL SCIENCE—
P. R. Watts, B.A. } æq.
A. R. Wheeler, B.A. }

SECTION I.

(ROMAN LAW AND CONSTITUTIONAL LAW.)

Pass (Order of Merit).

Thompson, E. H. } æq.	Watt, T. E.	Baxter-Bruce, A. } æq.
Spence, J., B A. } æq.	Haigh, V., B.A.	Williams, K. } æq.
Hertzberg, M.	Hollingdale, B. A. } æq.	Futter, V. S.
Townsend, S. E.	Waring, H. R. } æq.	Gahan, B.
Coen, F.	Hughes, J., B.A.	Dibbs, L. B.

SECTION II.

(INTERNATIONAL LAW, JURISPRUDENCE, AND THE ELEMENTS OF POLITICAL SCIENCE.)

Pass (Order of Merit).

Jordan, F. R., B.A. } æq.	O'Grady, J. E.	Quinn, J. J., B.A.
Real, E. T., B.A. } æq.	Wheeler, A. R., B.A.	Bonney, R. S., B.A.
Manning, H. E., B.A.	Henry, H., B.A.	Murray-Prior, R. S., B.A.
Gahan, B.	Ebsworth, S. W., B.A.	Harris, L. A., B.A.
Watts, P. R., B.A.	Grove, F. T.	

FINAL LL.B. EXAMINATION.

March, 1906.

Honours.

Class I.

Rowland, N. de H., B.A.

Class II.

Wilson, D., M.A. | Teece, R. N., M.A.

Pass.

Jaques, H. V., B.A.	McWilliam, N. G., B.A.	Murray, C. O'C., B.A.
Larkins, F. J. M., B.A.	Denham, H. K., B.A.	Breckenridge, C C. P.
Brown, G. E., B.A.	Bathgate, D. G., B.A.	

FACULTY OF MEDICINE.

FIRST YEAR EXAMINATION.

December, 1905.

RENWICK SCHOLARSHIP FOR GENERAL PROFICIENCY IN THE SUBJECTS OF THE EXAMINATION—Mary B. Burfitt, T. G. Ewing } æq.

COLLIE PRIZE FOR BOTANY.—Elizabeth I. Hamilton-Browne.

PROFESSOR HASWELL'S PRIZE FOR ZOOLOGY—Mary B. Burfitt.

PROFESSOR HASWELL'S PRIZE FOR ZOOLOGY (Laboratory Notes)—C. L. S. Macintosh, G. Tait } æq.

Pass (alphabetical).

Inorganic Chemistry, Physics, Biology, and Introductory Anatomy.

Abernethy, C. W.
Arnold, A. C.
Beatty, H. R.
Blumer, G. A.
Brierley, F. S.
Burfitt, Mary B.
Curtin, A. S.
Dey, L. A.
Dunlop, L. W.
Ewing, T.
Fowler, E.
Foy, L. H., B.E.
Hamilton-Browne, Elizabeth I.
Handcock, C. L. M.
Haynes, A. R.
Luddy, J. J.
Macintosh, C. L. S.
Macintosh, G. D.
Maclean, Lillian A.
Marsh, H. T.
Matthews, W. F.
Mobbs, A. W.
Norrie, J.
Parker, L. R.
Parnell, Ethel C.
Paul, C. N.
Petherbridge, W. C.
Pittman, E. E.
Purves, A. M.
Rich, V. M.
Roger, R.
Rorke, F. C.
Rorke, S. N.
Schmidt, E. T. K.
Smith, Clara R.
Smith, C. N.
Smyth, J. S.
Storey, J. C.
Whiting, K. M.

CLASS LISTS.

BIOLOGY.

Honours.

Class I.

Hamilton-Browne, Elizabeth I. | Burfitt, Mary B

Class II.

Marsh, H. T. | Smith, Clara, R. | Parker, L. R

CHEMISTRY (INORGANIC).

Honours.

Class II.

Burfitt, Mary B. | Smith, Clara R.

DEFERRED EXAMINATION.

Pass, March, 1906 (alphabetical).

Barton, A. D.	Freeman, Margherita M.	Schenk, T. G. W. H.
Brookes, W. S.	Goddard, T. H.	Tait, G.
English, R. J.	Lentaigne, J.	Thompson, W. B.
Fitzhandinge, J. F. G.	Norrie, G.	

CHEMISTRY (ORGANIC).

Passed with Distinction.

Ewing, T.

Passed with Credit.

Smith, Clara R. | McLean, Lillian A.

Pass.

Parker, L. R.	Foy, L. H., B.E.	Beatty, H.
Burfitt, Mary B.	Hamilton-Browne, Elizabeth I.	Pittman, E. E.
Schmidt, E. T. K.		Purves, A. M.
Smith, C. N.		

Pass, March, 1906 (alphabetical).

Abernethy, C. W.	Paul, C. N.	Storey, J. C.
Blumer, G. A.	Petherbridge, W. C.	Whiting, K. M.
Dunlop, L. W.	Rich, V. M.	Goddard, T. H.
Macintosh, L. S.	Rorke, S. N.	

SECOND YEAR TERM EXAMINATION.

December, 1905.

PROFESSOR ANDERSON'S PRIZE FOR LOGIC—E. W. Ferguson, H. H. Parkinson } æq.

ORGANIC CHEMISTRY.

Passed with High Distinction.

Sampson, G. A. | Parkinson, H. H. | Grigor, W. E.

Passed with Distinction.

Golledge, K. A. | Ferguson, E. W.

Passed with Credit.

McKillop, L. M.	Fahy, J. F.
Tebbutt, A. H., B.A. } æq.	Coen, B.
Bullock, H. } æq.	Hoets, J. W.
	Allen, H. G.

Pass (alphabetical).

Barron, G. M.	Hughes, J.	Smith, G. K.
Beazley, R.	Johnston, H. H.	Smith, H. C. G.
Candlish, R. S., B.A.	Lyons, Ettie, B.A.	Stafford, H. L.
Carroll, W. J. S., B.A.	McPhee, V. J.	Stewart, C. P.
Child, Sophia R.	Parry, L. D.	Talbot, Ethel
Crothers, C. A.	Patterson, M. S.	Veech, M. S.
Docker, E. N. B.	Powell, J. W. G., B.A.	Verge, C. A.
Ellard, W. C.	Rogers, L. H.	Waddy, R. G.
Groundwater, J. L.	Sinclair, A. F.	Woodburn, J. J.

Pass, March, 1906 (alphabetical).

Beeston, W. R.	Fraser, D.	Smith, K.
Croll, G.	Hill, D. B.	

SECOND DEGREE EXAMINATION.

(Anatomy and Physiology.)

September, 1905.

JOHN HARRIS SCHOLARSHIP FOR ANATOMY AND PHYSIOLOGY—

E. A. Brearley, B.A. } æq.
G. A. Brookes }

Passed with High Distinction.

Brearley, E. A., B.A. } æq.
Brookes, G. A. }

Passed with Distinction.

Heydon, G. A. M.	Bottrell, E. H.	Matthews, H. D. } æq.
Archdall, M.	Colvin, A. E.	Collier, F. W. D. }
Rogers, F. C.	Flecker, H.	

Passed with Credit.

Tomlinson, G. L.	Fox, A. W. } æq.	Weedon, C. J.
Cotton, G. R. C.	Furber, R. I. }	Giblin, W. E.
	Brown, Elsie F.	Welch, K. St. V.

Pass (alphabetical).

Dunn, A. J.	Larkins, N. C.	Rutherford, Constance M.
Geddes, C. B.	McFarlane, J. S.	Stephens, F. G. N.
Harris, H.	Martin, H. J.	Verge, J., B.A.
Heaslop, J. W.	O'Halloran, C. N.	

DEFERRED EXAMINATION.

Pass, March, 1906 (alphabetical).

Adams, Edith M.	Prevost, R. L. de T.	Ritchie, H. J.
Dickinson, Evelyn E.	Ramsden, E. M.	

GENERAL PATHOLOGY (TERM EXAMINATION.)

Pass, December, 1905 (alphabetical).

Adams, Edith M.
Archdall, M.
Bottrell, E. H.
Brearley, E. A., B.A.
Brookes, G. A.
Brown, Elsie F.
Collier, F. W. D.
Colvin, A. E.
Cotton, G. R. C.
Dickinson, Evelyn E.
Elwell, L. B.
Flecker, H.
Fox, A. W.
Furber, R. I.
Giblin, W. E.
Heydon, G. A. M.
Matthews, H. D.
Murray-Prior, Mabel
Prevost, R. L. de T.
Ramsden, E. M.
Ritchie, H. J.
Rogers, F. C.
Rutherford, Constance M., B.A.
Stephens, F. G. N.
Tomlinson, G. L.
Verge, J., B.A.
Weedon, C. J.
Welch, K. St. V.

Pass, March, 1906.

O'Halloran, C. M.

FOURTH YEAR EXAMINATION.

(Pathology and Operative Surgery and Surgical Anatomy.)

December, 1905.

Passed with Distinction.

Poate, H. R. G.

Passed with Credit.

Deakin, J. E. F.
Diethelm, O. A. A.
Schlink, H. H. } æq.
Shellshear, J. L. } æq.
MacInnes, A., B.A.
Paul, G. A.
Mackenzie, A. J.

Pass (alphabetical).

Bradley, C. H. B.
Campbell, J. S., B.A.
Chapman, H. O.
Craig, F.
Edwards, J. G.
Gilchrist, J. J.
Maher, C. W.
Moran, H. M.
Ormiston, Isabel M.
Pridham, H. E.
Rutledge, E. H.
Stacy, V. O.
Steele, A. B.
Stokes, F. O.
Vickers, W.
Walker-Smith, H. B.
Withers, O. E. B.

Pass, March, 1906 (alphabetical).

Binns, W. J., M.A.
Conolly, H. W.
Cook, S. L., B.A.
Renwick, C. S.
White, W. J.

FIFTH YEAR EXAMINATION.

June, 1905.

Pass (alphabetical).

Buchanan, J. D.
Clouston, T. B.
Culpin, E.
Griffiths, J. N.
Jones, L.
Kendall, H. W.
McDowall, St. A. W. L.
Mansfield, W. C.

December, 1905.

UNIVERSITY MEDAL FOR PROFICIENCY AT GRADUATION—T. C. Parkinson.

Honours at Graduation.

Class I.

Parkinson, T. C.

Class II.

McCulloch, H. T. C. } aeq.
Quaife, W. T. }
Palmer, C. R.
Harris, S. H.

SUBJECTS OF THE FIFTH YEAR EXAMINATION.

Passed with Distinction.

Parkinson, T. C.

Passed with Credit.

McCulloch, H. T. C.
Molesworth, E. H.
Harris, S. H.
Quaife, W. T.
Welch, J. B. St. V. } aeq.
O'Reilly, T. L. }

Pass (alphabetical).

Aspinall, A. J.
Aspinall, Jessie S.
Bell, G.
Binney, Constance C.
Clifford, J. P.
Cowlishaw, L.
Day, E. J.
Donovan, H. C. E.
Doyle, W. O.
Finselbach, F. W. A.
Gibson, D. D.
Harper, Margaret H.
Harris, J. S.
Harrison, E. S.
Hill, J. G. W., B.A.
Huggart, W. C.
Johnston, L. P.
Lightoller, G. H. S.
McKillop, A.
Palmer, C. R.
Palmer, H. W.
Pritchard, Alice, B.A.
Sapsford, C. P.
Stiles, B. T.
Thomson, Jean G.
Wherrett, E. A.
Willis, C. St. L.
Wylie, Mary W.

Pass, March, 1905.

Moseley, A. H.

SCHOOL OF DENTISTRY.

FIRST YEAR EXAMINATION.

Pass, December, 1905 (alphabetical).

Anderson, E. S.
Atwill, M. S.
Byers, W. E.
Hardwick, F.
Watson, E. O.

Pass, March, 1906 (alphabetical).

Richards, S. A.
Ruse, B. B.
Taylor, W. J.

SECOND YEAR EXAMINATION.

December, 1905.

ANATOMY.

Passed with Distinction.

Gattenhof, W. V.

Passed with Credit.

Lane, A. P. R.

Pass.

Hicks, H. V.

THIRD YEAR EXAMINATION.

ANATOMY AND PHYSIOLOGY.

August, 1905.

Passed with High Distinction.

Deck, N. C.
Grosse, E. H.

Passed with Distinction.

Punch, J.

Passed with Credit.

Pridham, E.
Riley, E. B. G.
Starkey, W. A.
Marshall, W. H.

Pass (alphabetical).

Broughton, F. W. W.
Burne, A. D.
Capper, L. H.
Cozens, G. C.
Kirchner, E. R.
Love, W. A.

MATERIA MEDICA, PATHOLOGY, SURGERY, MECHANICAL AND SURGICAL DENTISTRY.

Pass, December, 1905 (alphabetical).

Capper, L. H.	Deck, N. C.	Punch, J.
Cozens, G. C.	Grosse, E. H.	Starkey, W. A.

Pass, March, 1905 (alphabetical).

Kirchner, E. R.	Pridham, E.	Riley, E. B.
Love, W. A.		

FOURTH YEAR EXAMINATION.

MECHANICAL AND SURGICAL DENTISTRY.

Pass, December, 1905 (alphabetical).

Barnes, Margaret Estelle	Hardie, H. G.	Neave, B. W.
Bradley, J. H.	Marshall, F.	Praed, Annie
Crouch, F. R.	Moxham, C. G.	Starkey, J. N.
Dolan, A. P. B.		

Pass, March, 1906 (alphabetical).

Bond, H. H.	MacTaggart, E. A.	Stockwell, L. G.

PHARMACY STUDENTS.

BOTANY.

Pass, August, 1905 (alphabetical).

Emert, F. W.
George, S. J.
Woolford, A. B.

Pass, December, 1905 (alphabetical).

Hislop, G. R.
Hittman, R. L.
Holloway, E. S.
Mitchell, F. M.
Probert, C. K.
Selff, E. F.
Williams, L. B.

Pass, March, 1906 (alphabetical).

Brice-Beard, H. L.
Mooy, F.
Renwick, H. R.
Ritchie, O. J.
Scott, R. G.

MATERIA MEDICA.

Pass, December, 1905 (alphabetical).

Burgess, T. M.
Cunninghame, R. D.
Dodd, W. P.
Evans, S. H.
Greentree, A. G.
Lloyd, A. P.
Renwick, H. R.
Selff, E. F.
Short, A. G.
Siviter, H.
Woolford, A. B.

Pass, March, 1906.

Ritchie, O. J.

CHEMISTRY (INTRODUCTORY).

Pass, December, 1905 (alphabetical).

Dick, T. H.
Foster, J. U.
Greentree, A. G.
Maher, E.
Selff, E. F.

Pass, March, 1906 (alphabetical).

Brice-Beard, H. L.
Cunninghame, R. D.
Dodd, W. P.
Riddell, E. E.
Woolford, A. B.

CHEMISTRY (METALS).

Pass, December, 1905 (alphabetical).

Dick, T. H.
Maher, E.
Selff, E. F.
Sone, C.

Pass, March, 1906 (alphabetical).

Arnott, D.
Brice-Beard, H. L.
Campbell, G.
Cunninghame, R. D.
Davis, S. J.
Dodd, W. P.
Emert, F. W.
Hewlett, L. E.
Middleton, W. S.
Renwick, H. R.
Short, A. G.
Woolford, A. B.

ORGANIC CHEMISTRY.

Pass, December, 1905 (alphabetical).

Maher, E. | Woolford, A. B.

Pass, March, 1906 (alphabetical).

Dick, T. H. | Short, A. G.

CHEMISTRY—PRACTICAL.

Pass, December, 1905 (alphabetical).

Ballhausen, L. W.
Brice-Beard, H. L.
Boyne, A. M.
Cunninghame, R. D.
Dick, T. H.
Dodd, W. P.
Ellis, J. E.
Emert, F. W.
Foster, J. U.
Foster, P. G. H.
Greentree, A. G.
Hislop, G. R.
Maher, E.
Martin, R. A. S.
Selff, E. F.
Woolford, A. B.

Pass, March, 1906 (alphabetical).

Davis, J.
Lloyd, A. P.
Pope, R. H.

FACULTY OF SCIENCE.

FIRST YEAR EXAMINATION.

December, 1905.

LEVEY SCHOLARSHIP FOR CHEMISTRY AND PHYSICS—
Davidson, G. F. (Eng.) } æq.
Farran-Ridge, C. }

SLADE PRIZE FOR PRACTICAL PHYSICS—Davidson, G. F. (Eng.) } æq.
Cotton, L. A. }

SLADE PRIZE FOR PRACTICAL CHEMISTRY—Farran-Ridge, C.

SMITH PRIZE FOR PHYSICS—Sewell, L. G. (Eng.) } æq.
Cotton, L. A. }

Pass (alphabetical).

Bateman, J. E.
Cotton, L. A.
Farran-Ridge, C.
George, S.
Priestley, H.
Sharp, L. H.
Taylor, Dorothy R.

Pass, March, 1906.

Breakwell, E.
Deer, Margaret
Edwards, R. C.
Sherring, Beatrice A. S.

Class Lists in Individual Subjects.

BIOLOGY	PHYSICS.	CHEMISTRY.
Honours.	Honours.	Honours.
Class I.	Class I.	Class I.
None.	Davidson, G. F. (Eng.)	Farran-Ridge, C.
Class II.	Cotton, L. A.	Class II.
George, S.	Class II.	Cotton, L. A.
Sherring, Beatrice A. S.	Farran-Ridge, C.	Bateman, J. E.
		Edwards, R. C.

SECOND YEAR EXAMINATION.

December, 1905.

CAIRD SCHOLARSHIP FOR CHEMISTRY—C. J. White.
DEAS-THOMSON SCHOLARSHIP FOR GEOLOGY—W. L. Hammond.
PROFESSOR DAVID'S PRIZE FOR GEOLOGY—C. J. White.

Pass (alphabetical).

Benson, W. N.
Flynn, T. T.
Free, Mary G.
Hammond, W. L.
Johnston, T. H., B.A.
Mackinnon, E.

Pass, March, 1906.

Armstrong, Harriett E. M.	Blume, Bertha E.	Paul, A.
	Meldrum, H. J.	White, C. J.

Class Lists in Individual Subjects.

BIOLOGY.

Honours.

Class I.

Flynn, T. T.

Class II.

Goddard, E. J.

CHEMISTRY.

Honours.

Class I.

White, C. J.

Class II.

Hammond, W. L.
Free, Mary G.

PHYSICS.

Honours.

Class III.

Meldrum, H. J.
White, C. J.

GEOLOGY.

Passed with High Distinction.

White, C. J.	Flynn, T. T.	Goddard, E. J.
Hammond, W. L.	Free, Mary G.	

Passed with Distinction.

Mackinnon, E.	Benson, W. N	†Kesteven, H. L.
McIntyre, W. K. (Eng.)		

Passed with Credit.

Meldrum, H. J.	Ralston, A. W. (Arts)	Armstrong, Harriet M.

MINERALOGY.

Passed with High Distinction.

White, C. J.

Passed with Distinction.

Free, Mary G.	†Kesteven, H. L.	Meldrum, H. J.

PHYSIOLOGY.

Honours.

Class I.

Johnston, T. H.

THIRD YEAR EXAMINATION.

December, 1905.

PROFESSOR DAVID'S PRIZE FOR GEOLOGY—J. Atkinson.

The following have passed the Examination (alphabetical).

Dwyer, T. C.	Goddard, E. J., B.A.	Priestley, H.
Ewing, T.	Hallman, E. F.	Sharp, L. H.

† Not passing through the regular course.

Class Lists in Individual Subjects.

GEOLOGY AND PALÆONTOLOGY.

Honours.

Class I.

†Atkinson, J.

Class II.

Dwyer, T. } æq.
Goddard, E. J. }

Pass.

Hallman, E. F.
Fraser, G. (Arts)
†Cooley, Mary G.

GEOLOGY AND MINERALOGY.

Honours.

Class I.

†Atkinson, J.

Pass.

Hallam, E. F.

BIOLOGY.

Honours.

Class II.

Goddard, E. J.
Dwyer, T. C.

CHEMISTRY.

Honours.

Class II.

Priestley, H.

PHYSICS.

Honours.

Class I.

Lusby, S. G. (Arts)
Ewing, T.

Class III.

Sharp, L. H.

---

† Not passing through the regular course.

DEPARTMENT OF ENGINEERING.

PETER NICOL RUSSELL SCHOLARSHIPS (THREE) FOR MECHANICAL AND ELECTRICAL ENGINEERING—E. P. Norman, E. W. McKeown, A. S. Lloyd.

FIRST YEAR EXAMINATION.

December, 1905.

MR. S. H. BARRACLOUGH'S PRIZE FOR DESCRIPTIVE GEOMETRY—W. L. Ada.

Pass (alphabetical).

Ada, W. L.
Carter, E. M.
Davidson, G. F.
Morris, A. C.
Ranclaud, A. B.
Sewell, L. G.
Waterhouse, L. L.

Pass, March, 1906.

Bedford, M. E.
Carleton, G. B.
Clift, G. C.
Coward, W. B.
Cowdery, G. E.
Frew, A. D. H.
Howatson, G.
McBryde, J.
McPhillamy, M. C.
Mort, J. L.
Royle, J. McD.
Wardrop, R. D.
Waterhouse, L. V.

Class Lists in Individual Subjects.

CHEMISTRY.

Honours.

Class I.

Davidson, G. F.

Class II.

Carter, E. M.
Ranclaud, A. B. B.

APPLIED MECHANICS.

Honours.

Class I.

Davidson, G. F.

Class II.

Ranclaud, A. B. B.

ENGINEERING DRAWING AND DESIGN.

Honours.

Class I.

Carter, E. M.
McBryde, J.

Class II.

Waterhouse, L. L. } bar.
Wardrop, R. D. }

APPLIED MECHANICS.

Pass.

†Searl, H. F.
†Thornbury, E. S.

DESCRIPTIVE GEOMETRY.

Honours.

Class I.

Ada, W. L.

Class II.

Davidson, G. F.
Morris, A. C.
Ranclaud, A. B. B.
Carter, E. M.

†Not passing through the regular course.

SECOND YEAR EXAMINATION.

December, 1905.

WILLIAM AND JANE GRAHAME SCHOLARSHIP FOR MECHANICAL ENGINEERING—
Burnell, J. G. } æq.
May, H. W. }

DEPARTMENT OF MINING AND METALLURGY.

Pass.

Barker, N. C. | McIntyre, W. K. | Walker, J. S. D.

DEPARTMENT OF MECHANICAL AND ELECTRICAL ENGINEERING.

Pass.

Burnell, J. G. | Carter, H. G. | May, H. W.

Pass, March, 1906.

DEPARTMENT OF CIVIL ENGINEERING.

Dennis, S. | Donkin, W. D.

DEPARTMENT OF MINING AND METALLURGY.

Johnson, N. R. | Waugh, K. C.

DEPARTMENT OF MECHANICAL AND ELECTRICAL ENGINEERING.

Ireland, O. A. | Swain, H. G.
Power, R. | Thompson, H. L.

Class Lists in Individual Subjects.

ENGINEERING, DRAWING AND DESIGN.

Honours.

Class I.

Swain, H. J.
Power, R.
May, H. W.
Carter, H. G.
Burnell, J. G.

MECHANICAL ENGINEERING I

Honours.

Class I.

Burnell, J. G. } æq.
May, H. W. }

Class II.

Thompson, H. L. } æq.
Dennis, S. }

Pass.

†Searl, H. J.
†Thornbury, E. S.

THIRD YEAR EXAMINATION.

December, 1905.

DEPARTMENT OF MINING AND METALLURGY.

PROFESSOR LIVERSIDGE'S PRIZES FOR PRACTICAL METALLURGY AND ASSAYING—
Bridge, J. M.
Foxall, H. G.

† Not passing through the regular course.

Pass.

Bridge, J. M.	McMaster, C. F.	Waine, V. J.
Foxall, H. G.	Skerritt, A. W.	Whiteman, W. D.

Pass, March, 1906.

Coldham, J. C.	Cropper, C. H.	Penman, A. P.

DEPARTMENT OF MECHANICAL AND ELECTRICAL ENGINEERING.

December, 1905.

MR. E. KILBURN SCOTT'S PRIZE FOR ELECTRICAL ENGINEERING—
Flashman, H. W.

MR. S. H. BARRACLOUGH'S PRIZE FOR AN ENGINEERING ESSAY—
Flashman, H. W.

Pass.

Flashman, H. W.	Larkins, H. M.	Prescott, W. A.
Jones, S. W.	Norman, J. L.	Tivey, J. P., B.A.

Pass, March, 1906.

Clayton, F. H.

Class Lists in Individual Subjects.

MINING.

Honours.

Class II.

Bridge, J. M.

BUILDING CONSTRUCTION.

Pass.

*Hennessy, J. F.

METALLURGY.

Honours.

Class I.

Bridge, J. M.

Class II.

Whiteman, W. D.
Foxall, H. G.

PRACTICAL METALLURGY AND ASSAYING.

Honours.

Class I.

Bridge, J. M. } æq.
Foxall, H. G. }

ENGINEERING DESIGN AND DRAWING.

(For Mining Engineers.)

Class II.

Honours.

Foxall, H. G. | Bridge, J. M.

Price, A. L. (passed in Surveying, Engineering Drawing and Design, Civil Engineering IIIA, Electrical Engineering).

* Unmatriculated.

FOURTH YEAR EXAMINATION.

December, 1905.

DEPARTMENT OF MECHANICAL AND ELECTRICAL ENGINEERING.

MR. E. KILBURN SCOTT'S PRIZE FOR ELECTRICAL ENGINEERING—S. J. Bellemey.

Pass.

Bellemey, S. J. | Cowlishaw, R. G. | *Marriott, E. W.

ELECTRICAL ENGINEERING II.

Honours

Class I.

*Marriott, E. W.

Class II.

Cowlishaw, R. G. | Bellemey, S. J.

MECHANICAL ENGINEERING III.

Honours.

Class II.

*Marriott, E. W.

Pass.

Bellemey, S. J. | Cowlishaw, R. G.

ENGINEERING DESIGN AND DRAWING.

Honours.

Class I.

*Marriott, E. W.

* Unmatriculated.

UNIVERSITY OFFICERS, ETC.

VISITOR.

The Governor of New South Wales for the time being is *ex officio* Visitor to the University.

*1850.—His Excellency Sir Charles Augustus Fitz Roy, K.C.B., K.H.

1855.—His Excellency Sir Thomas William Denison, K.C.B.

1861.—His Excellency the Right Hon. Sir John Young, Bart., K.C.B., G.C.M.G.

1868.—His Excellency the Right Hon. the Earl of Belmore, M.A.

1872.—His Excellency Sir Hercules George Robert Robinson, G.C.M.G.

1879.—His Excellency the Right Hon. Lord Augustus W. Loftus, M.A., G.C.B.

1886.—His Excellency the Right Hon. Charles Robert Baron Carrington, P.C., G.C.M.G.

1891.—His Excellency the Right Hon. Victor Albert George Child Villiers, Earl of Jersey, G.C.M.G.

1893.—His Excellency the Right Hon. Sir Robert William Duff, P.C., G.C.M.G.

1895.—His Excellency the Right Hon. Henry Robert, Viscount Hampden.

1899.—His Excellency the Right Hon. William Lygon, Earl Beauchamp, K.C.M.G.

1902.—His Excellency Vice-Admiral Sir Harry Holdsworth Rawson, K.C.B.

At the Commemorations in 1872 and 1879, Sir Alfred Stephen, G.C.M.G. and C.B., administering the Government, presided as Visitor. At the Commemorations in 1893, 1895 1899, Sir Frederick Darley, Kt., C.J., administering the Government, presided as Visitor.

CHANCELLOR.

The Chancellor is elected by the Fellows of the Senate out of their own body, for such period as the Senate may from time to time appoint. The period is at present limited by By-law to three years, but the retiring Chancellor is declared to be eligible for re-election.

* The dates prefixed to the names of Office Holders refer to their first appointment or entrance upon office.

1851.—Edward Hamilton, M.A.
1854.—Sir Charles Nicholson, Bart., M.D., D.C.L., LL.D.
1862.—The Hon. Francis Lewis Shaw Merewether, B.A.
1865.—The Hon. Sir Edward Deas-Thomson, C.B., K.C.M.G.
1878.—The Hon. Sir W. M. Manning, Kt., K.C.M.G., LL.D.
1895.—The Hon. Sir Wm. Chas. Windeyer, Kt., M.A., LL.D.
1896.—The Hon. Sir Henry Normand MacLaurin, Kt., M.A., M.D., LL.D.

VICE-CHANCELLOR.

The Vice-Chancellor is annually elected by the Fellows of the Senate out of their own body.

1851.—Sir Charles Nicholson, Bart., M.D., D.C.L., LL.D.
1854.—The Hon. F. L. S. Merewether, B.A.
1862.—The Hon. Edward Deas-Thomson, C.B.
1865.—The Hon. J. H. Plunkett, B.A.
1869.—The Rev. Canon Allwood, B.A.
1883.—The Hon. Mr. Justice Windeyer, M.A., LL.D.
1887.—The Hon. Hy. Normand MacLaurin, M.A., M.D., LL.D.
1889.—The Hon. Arthur Renwick, B.A., M.D.
1891.—Henry Chamberlaine Russell, B.A., C.M.G., F.R.S.
* The Hon. Arthur Renwick, B.A., M.D.
1892.—The Hon. Arthur Renwick, B.A., M.D.
† His Honour Judge Backhouse, M.A.
1893.—His Honour Judge Backhouse, M.A.
1895.—The Hon. Hy. Normand MacLaurin, M.A., M.D., LL.D.
1896.—His Honour Judge Backhouse, M.A.
1900.—The Hon. Sir Arthur Renwick, Kt., B.A., M.D.
1902.—The Hon. Mr. Justice A. H. Simpson, M.A.
1904.—Sir Philip Sydney Jones, Kt., M.D.
1906.—The Hon. Sir Arthur Renwick, Kt., B.A., M.D.

THE SENATE.

The original Senate was appointed by Proclamation on the 24th of December, 1850, under the Act of Incorporation, and consisted of the following :—

The Rev. William Binnington Boyce	Francis Lewis Shaw Merewether, Esq.
Edward Broadhurst, Esq.	Charles Nicholson, Esq.
John Bayley Darvall, Esq.	Bartholomew O'Brien, Esq.
Stuart Alexander Donaldson, Esq.	The Hon. John Hubert Plunkett, Esq.
The Right Rev. Charles Henry Davis	The Rev. William Purves
Alfred Denison, Esq.	His Honour Roger Therry, Esq.
Edward Hamilton, Esq.	The Hon. Edward Deas-Thomson, Esq.
James Macarthur, Esq.	William Charles Wentworth, Esq.

* Mr. Russell having retired during his year of office, the Hon. Dr. Renwick was elected in his place for the remainder of the year.

† The Hon. Dr. Renwick having retired during his year of office, Judge Backhouse was elected in his place for the remainder of the year.

Under the original Incorporation Act, the election to vacant Fellowships was vested in the Senate until there should be one hundred Graduates holding the Degree of M.A., LL.D., or M.D. By an Act passed in 1861, the election to vacancies was vested in Fellows of the Senate, Professors and other Public Teachers of the University, Examiners, Principals of Incorporated Colleges within the University, Superior Officers declared to be such by By-law, and Graduates who should have taken any or either of the Degrees of M.A., LL.D., or M.D. By an Act passed in 1881, the privilege of voting at such elections was extended to Bachelors of Arts of three years' standing, and by the University Extension Act of 1884 the privilege was further extended to all Bachelors of three years' standing. In addition to the sixteen Fellows, it was provided by the Act of 1861 that there should not be fewer than three, nor more than six, *ex officio* Members of the Senate being Professors of the University in such branches of learning as the Senate might by any By-law select. The provisions of the above mentioned Acts are incorporated in the University and University Colleges Act of 1900.

EX-MEMBERS OF THE SENATE.

1850-1854—Hamilton, Edward, M.A.
1850-1855—Davis, the Right Rev. C. H., D.D.
1850-1856—Broadhurst, the Hon. Edward, B.A.
1850-1859—Boyce, the Rev. W. B.
1850-1859—Therry, His Honour Sir Roger
1850-1860—Macarthur, the Hon. James
1850-1860—Denison, Alfred, B.A.
1850-1861—Donaldson, the Hon. Sir Stuart A.
1857-1861—Cooper, Sir Daniel, Bart., G.C.M.G.
1853-1865—Douglass, Henry Grattan, M.D.
1861-1866—Woolley, the Rev. J., D.C.L. (Principal) (*ex officio*)
1850-1868—Darvall, Sir John Bayley, M.A.
1850-1869—O'Brien, Bartholomew, M.D.
1850-1869—Plunkett, the Hon. John Hubert, B.A.
1850-1870—Purves, Rev. W., M.A.
1850-1872—Wentworth, the Hon. William Charles
1868-1872—Nathan, Charles, M.D.
1869-1873—Stenhouse, N. D., M.A.
1868-1874—Arnold, the Hon. William M.
1850-1875—Merewether, the Hon. F. L. S., B.A.
1856-1877—Polding, the Most Rev. Archbishop, D.D.
1859-1878—Allen, the Hon. George
1873-1878—Dalley, the Right Hon. William Bede, P.C.
1858-1878—Martin, the Hon. Sir James, Chief Justice
1861-1879—Pell, Professor Morris Birkbeck, B.A. (*ex officio*)
1860-1879—Deas-Thomson, the Hon. Sir E., C.B., K.C.M.G.
1860-1880—Macarthur, the Hon. Sir William

1872-1882—Forster, the Hon. William
1850-1883—Nicholson, Sir Charles, Bart,, D.C.L., M.D., LL.D.
1867-1884—Badham, Professor Charles, D.D. (*ex officio*)
1861-1885—Smith, the Hon. Professor, M.D., LL.D., C.M.G. (*ex officio*)
1877-1885—Allen, the Hon. Sir George Wigram, K.C.M.G.
1885-1886—Martin, the Hon. Sir James, Chief Justice
1855-1886—Allwood, Rev. Canon Robert, B.A.
1879-1887—Darley, the Hon. Sir F. M., B.A., Chief Justice
1878-1887—Stephen, the Rt. Hon Sir Alfred, C.B., G.C.M.G., C.J., P.C.
1887-1888—Knox, George, M.A.
1872-1888—Rolleston, Christopher, C.M.G.
1880-1889—Barton, the Hon. Edmund, M.A.
1886-1889—Barry, the Most Rev. Alfred, D.D., LL.D.
1884-1890—Stephens, Professor W. J., M.A. (*ex officio*)
1883-1891—Jennings, the Hon. Sir Patrick A., LL.D., K.C.M.G
1875-1891—Macleay, the Hon. Sir William, Kt.
1870-1892—Hay, the Hon. Sir John, M.A., K.C.M.G.
1877-1892—Gurney, Professor Theodore T., M.A. (*ex officio*)
1891-1892—O'Connor, the Hon. Richard Edward, M.A.
1859-1894—Faucett, the Hon. Peter, B.A.
1885-1894—Scott, Professor Walter, M.A. (*ex officio*)
1861-1895—Manning, the Hon. Sir Wm. Montagu, Kt., LL.D., K.C.M.G.
1892-1896—Manning, the Hon. Mr. Justice Charles J., M.A.
1894-1896—Gurney, Professor Theodore T., M.A. (*ex officio*)
1866-1897—Windeyer, the Hon. Sir William Charles, Kt., M.A., LL.D.
1896-1898—Scott, Professor Walter, M.A. (*ex officio*)
1879-1904—Liversidge, Professor Archibald, M.A., LL.D., F.R.S.
1879-1904—Oliver, His Honour Alexander, M.A.

PRESENT SENATE.

1895—Anderson, Henry Charles Lennox, M.A.
1887—Backhouse, His Honour Judge Alfred Paxton, M.A.
1892—Barton, the Right Hon. Sir Edmund, G.C.M.G., M.A., LL.D., D.C.L., P.C.
1888—Butler, Professor Thomas, B.A.
1890—Cobbett, Professor Pitt, M.A., D.C.L., Dean of the Faculty of Law (*ex officio*).
1896—Cullen, the Hon. William Portus, M.A., LL.D., K.C., Acting Dean of the Faculty of Law.
1904—David, Professor T. W. Edgeworth, Dean of the Faculty of Science (*ex officio*).
1904—Griffith, the Right Hon. Sir Samuel Walker, G.C.M.G., M.A., P.C., Chief Justice of the High Court of Australia.
1887—Jones, Sir Philip Sydney, Kt., M.D.
1894—Knox, Edward William.
1898—MacCallum, Professor Mungo W., M.A., LL.D., Dean of the Faculty of Arts (*ex officio*).

1883—MacLaurin, the Hon. Sir Henry Normand, Kt., M.A., M.D., LL.D. (St. And. and Edin.), Chancellor.
1893—O'Connor, the Hon. Mr. Justice Richard Edward, M.A.
1877—Renwick, the Hon. Sir Arthur, Kt., B.A., M.D., Vice-Chancellor.
1889—Rogers, His Honour Judge Francis E., M.A., LL.B.
1875—Russell, Henry C., C.M.G., B.A., F.R.S.
1897—Simpson, The Hon. Mr. Justice Archibald Henry, M.A.
1888—Stephen, Cecil Bedford, M.A., K.C.
1883—Stuart, Professor T. P. Anderson, M.D., LL.D., Dean of the Faculty of Medicine (*ex officio*)
1889—Teece, Richard, F.I.A., F.F.A.

EX-PROFESSORS.

CLASSICS AND LOGIC.—1852-1866—Woolley, the Rev. John, D.C.L.; 1867-1883—Badham, Rev. Charles, D.D.
GEOLOGY AND MINERALOGY.—1870-1872—Thomson, Alexander M., D.Sc.
MATHEMATICS AND NATURAL PHILOSOPHY.—1852-1877—Pell, Morris B., B.A.. 1877—1902.—Gurney, Theodore T., M.A. (Professor *emeritus*).
CHEMISTRY AND EXPERIMENTAL PHYSICS.—1852-1885—Smith, the Hon. John, M.D., LL.D., C.M.G.
NATURAL HISTORY.—1882-1890—Stephens, Wm. John, M.A.
PHYSICS.—1886-1898—Threlfall, Richard, M.A.
GREEK.—1885-1900—Scott, Walter, M.A. (Professor *emeritus*)

TEACHING STAFF.

ANATOMY—Challis Professor—1890—*James T. Wilson, M.B., Ch.M. (Edin.)
Demonstrator—1905—S. A. Smith, M.B., Ch.M. Junior Demonstrator—1906—
Honorary Demonstrators—Gordon Craig, M.B., Ch.M.; J. Flynn, M.B., Ch.M. (Q.U., I.); F. P. Sandes, M.D., Ch.M.; Edgar M. Stephen, M.B., Ch.M.
ARCHITECTURE—P. N. Russell Lecturer—1887—(*a*) John Sulman, F.R.I.B.A.
BIOLOGY—Challis Professor—1890—William A. Haswell, M.A., D.Sc. (Edin.), F.R.S.
Demonstrator in Biology and Lecturer in Embryology—1892—James P. Hill, D.Sc., F.L.S. Junior Demonstrator in Biology—1904—E. J. Goddard, B.A., B.Sc.

* M.B., Ch.M., Honours 1883; late Demonstrator of Anatomy, University of Edinburgh.
(*a*) Appointment terminates on December 31st, 1907, under By-laws, Chap. xxvi., Sec. 2.

CHEMISTRY—Professor—1874—*Archibald Liversidge, M.A., LL.D., F.R.S. (Christ's College, Cambridge).

Demonstrator and Evening Lecturer — 1892 — James A. Schofield, A.R.S.M., F.I.C. Junior Demonstrators—1905—G. J. Gray, B.Sc., B.E.; 1905—S. G. Walton; 1906—J. W. Hogarth.

Demonstrator in Assaying and Chemistry—1906—R. Stoddart.

CLINICAL MEDICINE—Lecturer—1889—(*a*) R. Scot-Skirving, M.B., Ch.M. (Edin.)

CLINICAL SURGERY—Lecturers—1895—(*a*) Charles P. B. Clubbe, M.R.C.S., L.R.C.P.; 1899—(*a*) H. V. Critchley Hinder, M.B., Ch.M.

DENTISTRY—Mechanical Dentistry, including Crown and Bridge Work—1901—(*a*) W. Septimus Hinder, D.D.S. (Phila.); Clinical Dentistry, including Orthodontia—1901—(*a*) N. V. Pockley, D.D.S. (Phila.); Surgical Dentistry, including Deformities—1901—(*a*) R. Fairfax Reading, M.R.C.S., L.R.C.P., L.D.S. (Eng.)

DISEASES OF THE EAR—G. T. Hankins, M.R.C.S.

DISEASES OF THE SKIN—F. A. Bennet, M.D.

DISEASES OF WOMEN—1897—(*a*) Joseph Foreman, M.R.C.S.

ELECTRICAL ENGINEERING—P. N. Russell Lecturer—1905—(*b*) Ernest Kilburn Scott, M.I.E.E., A.M. Inst. C.E., M. Amer. I.E.E. Junior Demonstrator—1904—P. L. Weston, B.Sc., B.E.

ENGINEERING—Challis Professor—1884—†William H. Warren, Wh.Sc., M. Inst. C.E.

P. N. Russell Demonstrator and Assistant Lecturer in Engineering Design and Drawing— 1903—Alexander J. Gibson, A.M. Inst. C.E. Junior Demonstrator—1905—A. M. Martyn, B.E.

EQUITY, PROBATE, BANKRUPTCY AND COMPANY LAW—Challis Lecturer—1890—(*a*) G. E. Rich, M.A.

* Associate of the Royal School of Mines, London; late University Demonstrator of Chemistry, Cambridge.

† Member Inst. Civil Engineers, London: Member of the American Society of Civil Engineers; Whitworth Scholar; Society of Arts Technological Scholar.

(*a*) Appointment terminates on December 31st, 1907, under By-laws, Chap. xxvi., Sec. 2.

(*b*) Appointment terminates on December 31st, 1911, under By-laws, Chap. xxvi., Sec. 2.

GEOLOGY AND PHYSICAL GEOGRAPHY—Professor—1891—*T. W. Edgeworth David, B.A., F.R.S. (New College, Oxford), Dean of the Faculty of Science.

Assistant Lecturer in Mineralogy and Petrology and Demonstrator in Geology—1905—W. G. Woolnough, D.Sc.
Junior Demonstrator—1905—T. G. Taylor, B.Sc., B.E.

WILLIAM HILTON HOVELL LECTURER IN GEOLOGY AND PHYSICAL GEOGRAPHY—T. W. Edgeworth David, B.A., F.R.S. (New College, Oxford).

GREEK—Professor—1901—William John Woodhouse, M.A. (Queen's College, Oxford).

HISTORY—Challis Professor—1891—G. Arnold Wood, M.A. (Balliol College, Oxford).

LATIN—Professor—1891—Thomas Butler, B.A. (Sydney).
Assistant Lecturer—1903—Frederick Augustus Todd, B.A. (Sydney), Ph.D. (Jena).

LAW—Challis Professor—1890—Pitt Cobbett, M.A., D.C.L. (University College, Oxford), Dean of the Faculty of Law.

LAW OF PROCEDURE, EVIDENCE AND PLEADING—Challis Lecturer—1901—(*a*) David Ferguson, B.A.

LAW OF STATUS, CIVIL OBLIGATIONS AND CRIMES—Challis Lecturer—1890—(*a*) F. Leverrier, B.A., B.Sc.

LAW OF PROPERTY, CHALLIS LECTURER—1903—(*b*) J. B. Peden, B.A., LL.B.

LOGIC AND MENTAL PHILOSOPHY—Challis Professor—1890—† Francis Anderson, M.A. (Glasgow).

MATERIA MEDICA AND THERAPEUTICS—Lecturer—1883—(*a*) Thos. Dixson, M.B., Ch.M. (Edin.)

MATHEMATICS, PURE AND APPLIED—Professor—1903—‡Horatio Scott Carslaw, M.A. (Cambridge), D.Sc., (Glasgow), F.R.S.E.

Assistant Lecturers—1886—A. Newham, B.A. (St. John's College, Cambridge), Evening Lecturer. (Absent on leave.) Evening Lecturer for 1906—E. M. Wellisch, M.A. 1887—E. M. Moors, M.A., F.I.A.

---

* Late Scholar of New College, Oxford, and late Member of the Geological Survey of New South Wales.

† Late Clarke Philosophical Fellow University of Glasgow.

‡ Fellow of Emmanuel College, Cambridge, and formerly Lecturer in Mathematics, University of Glasgow.

(*a*) Appointment terminates on December 31st, 1907, under By-laws, Chap. xxvi., Sec. 2.

(*b*) Appointment terminates December 31st, 1910, under By-laws, Chap. xxvi., Sec. 2.

MECHANICAL ENGINEERING.—P. N. Russell Lecturer—1897—(*b*)*S. Henry Barraclough, B.E. (Syd.), M.M.E. (Cornell), Assoc. M. Inst. C.E. Junior Demonstrator—1905—L. R. Woodcock, B.E.

MEDICAL JURISPRUDENCE—Lecturer—1904—(*d*) Sydney Jamieson, B.A., M.B., Ch.M. (Absent on leave.) Lecturer for 1906—R. H. Todd, B.A., M.D., Ch.B.

MEDICAL TUTOR—1901—G. E. Rennie, B.A., M.D. (Lond.)

METALLURGY—P. N. Russell Lecturer—1899—(*a*) Basil W. Turner, A.R.S.M.

MIDWIFERY—Lecturer—1897—(*a*) Sir James Graham, Kt., M.D., Ch.M. (Edin.)

MINING—P. N. Russell Lecturer—1902—(*b*) F. Danvers Power, F G.S.

MODERN LITERATURE—Challis Professor—1887—†Mungo W. MacCallum, M.A., LL.D. (Glasgow), Dean of the Faculty of Arts.

Assistant Lecturers—English—1894—Ernest R. Holme, B.A. French and German—1903—George Gibb Nicholson, B.A. (Syd.), B.C.L. (Oxon.). French—Norman John Gough, B.A.

OPHTHALMIC MEDICINE AND SURGERY—Lecturer—1889—(*a*) ‡F. Antill Pockley, M.B., Ch.M. (Edin.)

PALÆONTOLOGY—Lecturer—1902—(*c*) William S. Dun.

PATHOLOGY—Professor—1902—David Arthur Welsh, M.A., B.Sc., M.D., M.R.C.P. (Edin.)

Demonstrator—1903—J. E. V. Barling, M.B., Ch.M.

PHYSICS—Professor—1899—J. Arthur Pollock, D.Sc. (Sydney).

Demonstrator—1903—O. U. Vonwiller, B.Sc. Junior Demonstrator—1906—S. G. Lusby, B.A.

PHYSIOLOGY—Professor—1883—§T. P. Anderson Stuart, M.D., Ch.M., LL.D. (Edin.), Dean of the Faculty of Medicine.

Demonstrator—1903—H. G. Chapman, M.D., B.S. Junior Demonstrator—1906—A. H. Moseley, M.B., Ch.M.

---

* Late Science Research Scholar of the Royal Commissioners of the Exhibition of 1851.

† Late Professor of English Literature in University College, Aberystwyth, Wales; late Luke Fellow, University of Glasgow.

‡ M.B., Ch.M., First Class Honours, University Medal; Scholar and Prizeman, Edin., 1884.

§ M.B., Ch.M., First Class Honours, Ettles Scholar, 1880; M.D., Thesis Gold Medal, 1882, Edin.; late Assistant to Professor of Physiology, Edinburgh.

(*a*) Appointment terminates 31st December, 1907, under By-laws, Chap. xxvi., Sec, 2.

(*b*) Appointment terminates 31st December, 1909, under By-laws, Chap. xxvi., Sec. 2.

(*c*) Appointment terminates 31st December, 1908, under By-laws, Chap. xxvi., Sec. 2.

(*d*) Appointment terminates 31st December, 1910, under By-laws, Chap. xxvi., Sec. 2.

PRINCIPLES AND PRACTICE OF MEDICINE—Lecturer—1901—(a)*W. Camac Wilkinson, B.A. (Syd.), M.D. (Lond.), M.R.C.P. (Lond.)

PRINCIPLES AND PRACTICE OF SURGERY—Lecturer—1890—(a) Alexander MacCormick, M.D. (Edin.)

PSYCHOLOGICAL MEDICINE—Lecturer—1889—(a) Chisholm Ross, M.D. (Syd.)

PUBLIC HEALTH—1904—(c) William G. Armstrong, B.A., M.B., Ch.M.

SURGICAL TUTOR—1901—John Morton, M.B., Ch.M.

SURVEYING—P. N. Russell Lecturer—1890—(a) Geo. H. Knibbs, L.S., F.R.A.S.

TUTOR TO THE WOMEN STUDENTS—1900—Isabel Margaret Fidler, B.A.

HONORARY LECTURERS.

Dr. T. Fiaschi—History of Medicine.

Dr. J. F. Flashman—Demonstrations in Psychological Medicine and Neurology.

Sir Philip Sydney Jones—The Ethics of Medical Practice.

Dr. A. E. Mills—Diseases of Children.

CURATORS OF MUSEUMS.

MUSEUM OF NORMAL AND MORBID ANATOMY—Professsor D. A. Welsh, M.A., B.Sc., M.D. (Honorary).

MACLEAY MUSEUM OF NATURAL HISTORY—George Masters.

NICHOLSON MUSEUM OF EGYPTIAN, GREEK, ROMAN AND MEDIÆVAL ANTIQUITIES — Professor W. J. Woodhouse, M.A. (Honorary).

EXAMINERS FOR 1905-6.

EXAMINERS IN ARTS.

The Professors.	Rev. F. V. Pratt, B.A.
The Lecturers.	D. G. Stewart, B.A.
A. C. Millard, B.A.	R. C. Teece, M.A., LL.B.

EXAMINERS IN LAW.

The Professors.	J. M. Harvey.
The Lecturers.	R. C. Teece, M.A., LL.B.

* M.B. First Class Honours Medicine, University Scholarship and Gold Medal.
(a) Appointment terminates 31st December, 1907, under By-laws, Chap. xxvi., Sec. 2.
(c) Appointment terminates 31st December, 1910, under By-laws, Chap. xxvi., Sec. 2.

EXAMINERS IN MEDICINE.

The Professors.
The Lecturers.
Fourness Barrington, F.R.C.S. (Eng.), M.B., Ch.M. (Edin.)
Thomas Fiaschi, M.D. (Pisa).
J. Macdonald Gill, M.D., L.R.C.P., M.R.C.S.
E. J. Jenkins, B.A., M.D. (Oxon.)
G. T. Hankins, M.R.C.S. (Eng.)
Sir Philip Sydney Jones, Kt., M.D. (Lond.).
Stanhope H. McCulloch, M.B., Ch.M. (Edin.)
The Hon. Sir H. N. MacLaurin, M.A., M.D. (Edin.), LL.D.
W. Odillo Maher, M.D., Ch.M. (Q.U.I.), M.R.C.S. (Eng.)
Arthur A. Palmer, M.B., Ch.M.
G. E. Rennie, B.A. (Syd.), M.D. (Lond.)
The Hon. Sir Arthur Renwick, Kt., B.A., M.D. (Edin.)
Eric Sinclair, M.D., Ch.M.
Professor E. C. Stirling, M.D.

EXAMINERS IN DENTISTRY.

The Professors.
The Lecturers.
A. Burne, D.D.S. (Phil.)
L. A. Carter, D.D.S. (Phil.)
A. B. Cox, L.R.C.P. (Lond.), L.S.A. (Lon.), M.R.C.S. (Eng.)
P. B. Reading, L.D.S. (Eng.)

EXAMINERS IN SCIENCE.

The Professors.
The Lecturers.
J. J. C. Bradfield, M.E.

REGISTRAR AND LIBRARIAN, 1882—H. E. Barff, M.A.
ESQUIRE BEDELL, 1897—John Mitchell Purves, M.A.
UNIVERSITY SOLICITOR, 1886—Hon. James Norton, LL.D., M.L.C.
CHIEF CLERK AND ACCOUNTANT, 1887—Robert A. Dallen.
ASSISTANT LIBRARIAN, 1902—John Le Gay Brereton, B.A.
JUNIOR ASSISTANT LIBRARIAN, 1905—Kenneth Binns.
SECRETARY OF THE UNIVERSITY EXTENSION BOARD—E. R. Holme, B.A.
CLERK, 1887—William S. Mayer.
JUNIOR CLERK, 1902—Charles W. Peacock.
JUNIOR ASSISTANT IN THE LIBRARY—H. V. Baret, B.A.
AUDITOR, 1899—David Fell.
YEOMAN BEDELL—S. Craddock.
OVERSEER OF THE UNIVERSITY PARK AND GROUNDS—Albert Green.

MEMBERS OF THE UNIVERSITY.

MEMBERS OF CONVOCATION.

H.R.H. the Prince of Wales, LL.D.§
Abbott, George H., B.A., 1887, M.B., Ch.M.
Abbott, Henry Palmer, B.A., 1893
Abbott, Thos. K., B.A., 1888
Abigail, Eliza L., B.A., 1893 (Mrs. Bates)
Abigail, Ernest Robert, B.A., 1896, LL.B.
Affleck, Ada C., M.B., Ch.M. (Mrs. Hardman)
Aiken, Percy Norman, M.B., 1903
Alexander, Maud Marion, B.A., 1902
Allan, Edith Jeannie, B.A., 1895 (Mrs. Costello)
Allen, Arthur Wigram, B.A., 1883§
Allen, George Boyce, B.A., 1877
Allen, Reginald C., B.A., 1879
Ambrose, Theodore, M.B., Ch.M.
Amess, William, B.A., 1883
Amos, Jeanie Cairns, B.A., 1890 (Mrs. Anderson)
Amos, Nellie Margaret, B.A., 1902
Amphlett, Edward Albin, B.E., 1889
Amphlett, Henry Martin, B.E., 1897
Anderson, Arthur, M.B., Ch.M.
Anderson, Catherine, M.A.
Anderson, Francis, M.A.§¶
Anderson, Henry C. L., M.A.†
Anderson, Hugh Miller, B.A., M.B., Ch.M.
Anderson, Maud Edith, B.A., 1896 (Mrs. Ashton)
Anderson, William A. S., B.A., 1892
Andrews, Ernest Clayton, B.A., 1894
Andrews, William, M.B., 1887§
Anstey, George Webb, B.A., 1893
d'Apice, Antoine Wm. M., B.A., 1899, LL.B.
d'Apice, John Edmund Francis, B.Sc., 1900
Armitage, Charles Horsfall, B.A., 1902
Armstrong, Helen Daphne Harvey, B.A., 1902
Armstrong, Ina Beatrice Harvey, B.A., 1901
Armstrong, Isabella, B.A., 1895
Armstrong, Laurens F. M., B.A., 1884, LL.B.
Armstrong, Margaret Jane, B.A., 1897
Armstrong, Tancred de Carteret, B.A., 1891
Armstrong, William G., B.A., M.B., Ch.M.¶
Arnold, Austin Guerry de L., LL.B., 1903
Arnold, Edwin Charles, B.A., 1896
Arnott, Robert Fleming, B.E., 1895
Artlett, Ettie, B.A., 1888 (Mrs. Starkey)
Artlett, William Langridge, B.A., 1902
Aspinall, Arthur Ashworth, B.A., 1889
Aspinall, Archibald John, M.B., Ch.M.
Aspinall, Jessie, M.B., Ch.M.
Atkins, William L., B.A., 1893
Auld, John Hay Goodlet, B.A., 1897
Austin, Alfred Herbert, B.A., 1903
Ayres, Charles, B.A., 1882
Backhouse, Alfred Paxton, M.A.†
Bailey, Margaret Anne, B.A., 1900
Ball, Lionel Clive, B.E., 1900
Bancroft, Peter, M.B., Ch.M.
Barber, Richard, M.A.
Barbour, George Pitty, M.A.
Baret, Henri Victor David, B.A., 1903
Barff, Henry E., M.A.*
Barker, Henry Auriol, B.A., 1881§

* Superior Officer. † Fellow of the Senate. ¶ Public Teacher.
§ Admitted *ad eundem gradum*.

Barker, Reginald Frederick, B.E., 1900
Barker, Thomas Chas., B.A., 1886
Barlee, Frederick R., M.A.
Barling, James Eric Vernon, M.B., Ch.M.¶
Barnes, Edmund H., M.B., Ch.M.
Barnes, Pearl Ella, M.A.
Barnet, Donald McKay, B.A., 1890
Barraclough, Francis Egerton, B.A., 1895, LL.B.
Barraclough, Samuel H., B.E., 1892¶
Barret, James, M.D.
Barrington, Fourness, F.R.C.S., M.B., Ch.M.‡
Barry, Alfred, LL.D.§
Barry, Hugh de Barri, B.A., 1898
Barton, Right Hon. Sir Edmund, M.A.†
Barton, John a'Beckett Darvall, B.A., M.B., Ch.M.
Barton, Joanna, B.A., 1893
Barton, Wilfred Alexander, B.A., 1903
Bathgate, Donald Gordon, B.A., 1903, LL.B.
Bavin, Gertrude Lillian, B.A., 1898
Bavin, Thos. Rainsford, B.A., 1894, LL.B.
Baylis, Harold M., B.A., 1883
Beardmore, Ada, B.A., 1896
Beardsmore, Emily Maud, B.A., 1894
Beardsmore, Robt. Henry, B.A., 1895
Beaumont, Annie Holloway, B.A., 1898
Beaver, William Richard, B.E., 1899
Beegling, Daniel, B.A., 1885
Beehag, Samuel Alfred, B.A., 1886
Belgrave, T. B., M.D.§
Bell, Harry C. Rikard, M.B., Ch.M.
Benjafield, Vivian, M.B., Ch.M.
Bennet, Francis Alexander, M.D.§
Bennett, Agnes Elizabeth L., B.Sc., 1894
Bennetts, Harold Graves, M.B., Ch.M.
Berne, Percy Witton, B.A., 1883
Bertie, Charlotte Maud, B.A., 1896
Biffin, Harriett E., M.B., Ch.M.
Binney, Ed. Harold, M.B., Ch.M.
Binns, William Johnstone, M.A.
Birch, William John, B.E., 1891
Black, Reginald A. W., B.A., 1896, B.E.
Blackburn, Charles B., M.D., Ch.M.
Blacket, Arthur R., B.A., 1872
Blacket, Cuthbert, B.A., 1891
Blair, John, M.D.
Blatchford, Torrington, B.A., 1894
Blaxland, Henry Charles, B.A., 1897
Blaney, Henry Patrick, M.B., 1903
Bligh, Erasmus A. R., M.B., Ch.M.
Bloomfield, Elsie I'Anson, B.A. 1897 (Mrs. Horder)
Bloomfield, William John, B.A., 1896, LL.B.
Blue, Archibald Irwin, M.B., Ch.M.
Blumer, Charles, B.A., 1894
Blumer, George Alfred, M.A.
Board, Peter, M.A.
Bode, Arnold G. H., B.A., 1888
Bonamy, Nellie Mildred Blanche, B.A., 1899
Boelke, Paul, M.B., Ch.M.
Böhrsmann, Gustav Hall, M.B., Ch.M.
Böhrsmann, Rudolph H., M.B., Ch.M.
Bolton, Barbara Marion, B.A., 1902
Bond, Lionel Wilfred, M.B., Ch.M.
Booth, Mary, B.A., 1890
Bourne, Eleanor Elizabeth, M.B., Ch.M.
Bowden, John Ebenezer, M.A.
Bowker, Cedric Victor, M.B., 1898
Bowmaker, Jessie, B.A., 1901
Bowmaker, Ruth, M.A. (Mrs. Britton)
Bowmaker, Theophilus Robert, B.A., 1896
Bowman, Alister S., B.A., 1878
Bowman, Andrew, M.A.
Bowman, Archer, B.E., 1889
Bowman, Arthur, B.A., 1880
Bowman, Edward, M.A.
Bowman, Ernest M., B.A., 1880
Boxall, Nelson Leopold, B.A., 1896
Boyce, Francis Stewart, B.A., 1893, LL.B.
Boyd, Arthur, B.Sc., 1901, B.E.
Boyd, Robert James, B.E., 1898

§Admitted *ad eundem gradum*. ¶Public Teacher ‡ Examiner.
† Fellow of the Senate.

Boyd, William Sprott, B.E., 1901
Brade, Gerald Francis, M.B., 1899
Bradfield, John Job Crew, M.E.‡
Brearley, Joseph Henry Draper, B.Sc., 1894, B.E.
Brennan, Christopher J., M.A.
Brennan, Francis P., M.A.
Brennan, Sarah O., M.A., B.Sc.
Brennand, Henry John W., B.A., M.B., Ch.M.
Brentnall, Nina Tillotson, B.A., 1903
Brereton, John Le Gay, B.A., 1894
Brierley, Frank Nunan, M.A., LL.B.
Britten, Herbert E., B.A., 1888
Britton, Theodosia Ada, B.A., 1891 (Mrs. Wallace)
Broadbent, Percy Lewis, M.B., Ch.M.
Broderick, Cecil Thomas Hawkes, B.A., 1896, LL.B.
Brodie, Isabella Esther, B.A., 1895 (Mrs. Newton)
Broinowski, Gracius Herbert, M.B., 1897
Broinowski, Leopold T., B.A., 1897
Brook, Henry James Sidney, B.A., 1896
Broome, Edward, B.A., 1897
Broughton, Alfred, M.A.
Brown, Alfred, B.A., 1866
Brown, George Edward, M.A. LL.B.
Brown, Mary E., B.A., 1885
Brown, Sophia, B.A., 1894
Brown, William Vernon, B.A., 1894
Browne, Claude Seccombe, M.B., Ch.M.
Browne, William C., B.A., 1864
Brownlie, Elizabeth Alice Dalziel, B.A., 1901
Brownlie, Eveline Agnes, B.A., 1902
Bruce, Annie, B.A., 1901
Bruce, Grace Mitchell, B.A., 1901
Bruce, Mary H., B.A., 1887 (Mrs. Walker)
Bruce, Mary Jane, B.A., 1896
Buchanan, Chas. Arthur, B.A., 1889
Buchanan, Charles Pakenham, B.A., 1900
Buchanan, George Arthur, M.B., Ch.M.
Buchanan, Joseph David, M.B., Ch.M.
Buckland, Thomas, B.A., 1878
Bucknell, D'Arcy H., M.A.
Bucknell, Louis Jeffrey, B.E., 1891
Bundock, Charles W., B.A., 1878
Bundock, Francis F., B.A., 1877
Bunting, Edith Annie, B.A., 1896
Burfitt, Walter F., B.A., B.Sc., M.B., Ch.M.
Burge, Stephen Bruce, M.B., 1900
Burkitt, Edmund Henry, M.B., 1896
Burne, A., D.D.S.‡
Busby, Hugh, M.B., Ch.M.
Bushnell, Pollie, B.A., 1896
Butler, Francis J., B.A., 1882
Butler, Patrick James, B.A., 1900
Butler, Spencer Joseph St. Clair, B.A., 1893, LL.B.
Butler, Stanley Wm. Beauchamp, B.A., 1900
Butler, Thomas, B.A., 1876¶†
Byrne, Lily Comyn, B.A., 1896
Byrne, James Kevin, B.A., 1894
Byrne, William Edmund, B.A., 1892
Cadden, Leslie George Barton, B.A., 1899
Caddy, James Pascoe, B.E., 1903
Cahill, Annie Lucille, B.A., 1894
Cahill, John Hampton, M.B., 1903
Cakebread, William Jowers, B.A., 1894
Cameron, Archibald Peter, B.A., 1894
Cameron, Colin Bowman, B.E., 1902
Cameron, Donald Allan, M.B., Ch.M.
Campbell, Allan, B.A., 1874
Campbell, Charles Robert, B.A., 1893
Campbell, Edward, M.A.
Campbell, George P., B.A., 1885
Campbell, Gerald R., M.A.
Campbell, John Stuart, B.A., 1902
Campbell, Joseph, M.A.
Canaway, Arthur P., B.A., 1894§
Cape, Alfred John, M.A.
Cargill, John Sydney, B.A., 1889
Cargill, William Duthie, M.B., Ch.M.
Carlisle-Thomas, Ella, B.A., 1900 (Mrs. Budden)
Carlile-Thomas, Julia, M.B., Ch.M. (Mrs. Fox)

† Fellow of the Senate. ¶ Public Teacher. § Admitted *da eundem gradum*.
‡ Examiner.

Carlisle, W. W., B.A., 1878
Carlos, Joseph, B.A., 1893§
Caro, Hilda, B.A., 1896
Carruthers, Joseph H., M.A.
Carslaw, Horatio Scott, M.A., D.Sc.¶
Carter, L. A., D.D.S.‡
Carvosso, Albert B., B.A., 1884
Casey, Michael Alphonsus, B.A., 1896
Castleman, Arthur, M.A.
Castling, James Robert, B.A., 1896
Challands, Fred., M.B., Ch.M.
Chalmers, Stephen Drummond, M.A.
Chambers, George Alexander, M.A.
Chapman, Alfred Ernest, B.A., 1893, LL.B.
Chapman, Henry G., M.D., B.S.¶
Chenhall, William Thomas, M.B., 1897§
Chisholm, Edwin Claude, M.B., Ch.M.
Chisholm, Wm., B.A., 1875, M.D.§
Chubb, Montague Charles Lyttelton, B.A., 1896
Clark, Francis Geo., B.A., 1900, LL.B.
Clarke, Francis W., B.A., 1884
Clarke, Gother Robert C., M.B., Ch.M.
Clarke, Philip Sylvester, M.B., Ch.M.
Clayton, Cyril Henry Joseph, B.E., 1903
Clegg, William Carnegie, B.A., 1899, LL.B.
Cleland, John Burton, M.D., Ch.M.
Clipsham, Gertrude Mary, B.A., 1899
Clines, Peter Jos., B.A., 1896, LL.B.
Close, John Campbell, B.Sc., 1903
Closs, Wm. John Leech, B.A., 1890
Clubb, Wallace, B.A., 1896
Clubbe, Chas. P. B., M.R.C.S., L.R.C.P.¶
Cobbett, Pitt, M.A., D.C.L.¶†
Cocks, Nicholas John, M.A.
Coffey, Francis Louis Verhulst, B.A., 1894, LL.B.
Coghlan, Charles A., M.A., LL.D.
Coghlan, Iza Frances Josephine, M.B., Ch.M.
Cohen, Alroy Maitland, B.A., 1903
Cohen, John J., M.A.
Cole, Louisa, B.A., 1898
Cole, Percival Richard, M.A.
Colyer, Moreton John Godden, B.E. 1896
Combes, Edgar William Anthony, M.B., Ch.M.
Combes, Jane Frances, B.A., 1895
Conlon, William Aloysius, B.A., M.B., Ch.M.
Connellan, John, B.A., 1892
Connolly, John, B.A., 1894
Connolly, Thomas Patrick, M.B., Ch.M.
Connor, Thomas John, B.A., 1895
Conroy, Lionel Bigoe Henzell, M.B., 1903
Cook, Sydney Leicester, B.A., 1898
Cook, Walter Edmund, M.E.§
Cooke, Clarence Hudson, B.A., 1892
Cooley, Percy Glover, M.B., Ch.M.
Cooper, David John, M.A.
Cooper, Sir Pope Alexander, M.A.
Cope, Hubert Roger, M.B., 1898
Copland, Frank Fawcett, B.A., 1894
Corbett, Wm. F., B.A., 1883
Corbin, Albert George, B.Sc., M.B., Ch.M.
Cordingley, Grace Marion, M.A.
Corfe, Anstruther John, M.B., Ch.M.
Corfe, Duncan Bertram, B.E., 1903
Corlette, Cyril E., M.D., Ch.M.
Corlette, James Montagu Christian, B.E., 1903
Cormack, Alex. John, M.A.
Cosh, James, B.A., 1891
Cosh, John Inglis Clark, M.B., Ch.M.
Coutts, Margaret, B.A., 1903
Cowan, David, B.A., 1894
Cowlishaw, Leslie, M.B., Ch.M.
Cowlishaw, Wm. Patten, M.A.
Cowlishaw, Winifred, B.A., 1903
Cowper, Sedgwick Spelman, M.A.
Cox, A. B., M.R.C.S ‡
Cox, Frederick Henry, M.B., 1895
Cox, Harold, B.A., 1889
Coyle, William Thomas, B.A., 1891
Craig, Alex. Donald, B.A., 1893, B.E.
Craig, Charles, B.A, 1892, LL.B.
Craig, Robert Gordon, M.B., Ch.M
Cramp, Karl Reginald, M.A.

† Fellow of the Senate. ¶ Public Teacher. § Admitted *ad eundem gradum.* ‡ Examiner.

Crane, Charles, B.A., 1882
Crane, John T., B.Sc., 1887
Crawford, Stella Maud C., B.A., 1896
Crawford, Thomas Simpson, M.A.
Crawley, Aubrey Joseph Clarence, M.B., Ch.M.
Creagh, Albert J., B.A., 1889
Creagh, William John, B.A., 1892, LL.B.
Cribb, Estelle Muriel Bridson, M.A.
Cribb, John Geo., M.A.
Cripps, Esther Fischer, B.A., 1891
Crisford, Hilda Nelsie Moore, B.A., 1902
Crocker, Herbert D., M.A.
Crompton, William, M.A.
Crowley, Archibald, B.A., 1901
Cruise, Emily A., B.A., 1897
Cullen, Wm. P., M.A., LL.D.†
Cullinane, John Aloysius, B.A., 1895, LL.B.
Cumming, Jennie, B.A., 1896 (Mrs. Kinnear)
Curlewis, Harold Burnham, B.A., 1897
Curlewis, Herbert Raine, B.A., 1890, LL.B.
Curnow, William Leslie, B.A., 1890
Curtis, William C., M.A.
Curtis, William John, M.A., LL.B.
Daley, Frank H., B.A., 1889
Dalmas, Lizzie, B.A., 1895
Daly, May Edith, B.A., 1895 (Mrs. McDonald)
Dalton, Gerald T. A., M.A.
Dansey, St. John Warburton, M.B., Ch.M.
D'Arcy-Irvine, Malcolm Mervyn, B.A., 1889
D'Arcy, Constance Elizabeth, M.B., Ch.M.
D'Arcy, George Synnott, B.A., 1895
D'Arcy, John Synnott, B.A., 1890
Dare, Henry H., M.E.
Dargin, Sydney, B.A., 1871
Dash, Ebenezer, B.A., 1894
David, T. W. Edgeworth, B.A., F.R.S.¶†
Davidson, Colin George Watt, B.A., 1899, LL.B.
Davidson, Leslie G., M.B., Ch.M.
Davies, Arthur Bernard, B.A., 1894, LL.B.
Davies, Edith Warlow, M.A.
Davies, Harry Warlow, B.E., 1903
Davies, Reginald L., M.B., Ch.M.
Davies, Wyndham John E., B.A., 1893, LL.B.
Davis, Agnes Marianne Harrison, B.A., 1896, B.Sc. (Mrs. S. E. Cook)
Davis, Henry, B.A., 1890
Davis, James Shedden, M.D., Ch.M.
Davison, Samuel Beaumont, B.A., 1896
Dawson, Arthur F., M.A.
Dawson, James, M.A.§
Day, Ernest James, M.B., Ch.M.
Day, Leo Septimus, B.A., 1899
Deane, Henry, M.A.§
Deane, Henry James, B.E., 1897
Deane, William Smith, M.A.
De Lissa, Ethel Naida, B.A., 1898 (Mrs. Bensusan).
De Lissa, Horace, B.A., 1896
Debenham, Arthur John, B.E., 1903
Deck, George Henry Baring, M.B., Ch.M.
Deck, John Northcote, M.B., Ch.M.
Delohery, Cornelius, M.A.
Delohery, Ernest Cecil, B.E., 1903
Delohery, Henry Charles, M.B., 1899
Denham, Howard Kynaston, B.A., 1903, LL.B.
Dennis, James, M.A.
Dettmann, Herbert Stanley, B.A., 1897
Dey, Charlotte Johnston, B.A., 1898 (Mrs. Stuckey)
Dey, Robert, M.B., Ch.M.
Dick, James Adam, B.A., 1886
Dick, Robert, M.B., Ch.M.
Dick, William Thomas, B.A., 1890
Dickinson, Edward Moseley, B.A., 1899.
Dight, Wilfred Billingsley, M.B., Ch.M.
Dimond, Margaret Cecilia, B.A., 1893
Dixon, Graham Patrick, M.B., Ch.M.
Dixon, James Thomson, B.E., 1895

†Fellow of the Senate. ¶ Public Teacher. § Admitted *ad eundem gradum.*

Dixon, Herbert Hutchinson, B.A., 1894
Dixson, Thos. S., M.B., Ch.M.¶
Doak, Frank Wiseman, B.A., 1891
Doak, Walter James, B.E., 1895
Docker, Alfred Brougham, B.E., 1903
Docker, Ernest B., M.A.
Docker, Gladys Mary Brougham, B.A., 1903
Doig, Alexander John, B.A., 1895
Donovan, John J., LL.D.
Dove, Wm. Rd. Norton, B.A., 1893
Doust, Edith Lucy, M.A. (Mrs. Wolstenholme)
Dowe, Philip William, B.A., 1893
Dowling, Frank Vincent, B.A., 1898
Doyle, John, B.A., 1891§
Drummond, Shafto L., B.A., 1893
Dudley, Joseph T., B.A., 1885
Dumolo, Nona, B.A., 1898
Dun, William Sutherland¶
Dunnicliff, May Clifton, B.A., 1898
Dunlop, John W., B.A., 1895
Dunlop, Norman John, B.A., B.Sc., M.B., Ch.M.
Dunne, John D., B.A., 1873
Dunstan, Ephraim, M.A.
Durack, Joseph Jerry E., B.A., 1899
Durack, William Joseph, M.B., Ch.M.
Eames, Jane, B.A., 1895
Edmunds, John Michael, B.A., 1892
Edmunds, May, B.A., 1897
Edmunds, Walter, M.A., LL.B.
Edwards, David Sutherland, B.A., 1894, LL.B.
Edwards, Edward Evan, B.A., 1898
Edwards, Edward Samuel, M.A.
Edwards, J. Ross, M.A.
Edwards, John, B.A., 1891
Eichler, William Otto Heldmuth, M.B., Ch.M.
Elder, Francis R., B.A., 1877
Eldridge, Ada Maitland, M.A.
Elkin, Jonathan Bevan, B.A., 1895
Elliott, Millicent V., B.A., 1895
Ellis, Ethel, B.A., 1894
Ellis, Mary, B.A., 1894 (Mrs. George)
Ellis, Lawrence Edward, M.B., Ch.M.
Elphinstone, Elsie Mary, B.A., 1899
Elphinstone, James, B.A., 1881
Elphinstone, James Cooke, B.A., 1896, LL.B.
Elworthy, Wm. Henry, M.B., Ch.M.
Emanuel, Nathaniel, B.A., 1867
England, Theo., B.A., 1885
England, Thomas H., B.A., 1885
Enright, Walter John, B.A., 1893
Evans, Ada E., B.A., 1895, LL.B.
Evans-Jones, David Pentland, B.A., 1898, LL.B.
Fahey, Bartley Francis, B.A., 1901, LL.B.
Fairfax, Edwd. Wilfred, M.B., Ch.M.
Faithfull, George Ernest, M.A.
Faithfull, Henry Montague, M.A.
Faithfull, William Percy, M.A.
Farrell, Robert M., M.B., Ch.M.
Feez, Arthur H., B.A., 1880
Fell, Catherine Isabella, B.A., 1900
Ferguson, David, B.A., 1886¶
Ferguson, John Alexander, B.A., 1902, LL.B.
Fiaschi, Thomas, M.D.‡
Fidler, Carleton B., B.A., 1888
Fidler, Isabel Margaret, B.A., 1898¶
Finn, William George, B.A., 1895
Finney, Charlotte, B.A., 1895 (Mrs. Hodge)
Finney, Joseph, B.A., 1894
Fisher, Donnelly, M.A.
Fitz, Norman, B.E., 1888
Fitzgerald, Edmund, B.A., 1866
Fitzgerald, John Thomas, B.A., 1890
Fitzgerald, Robert Marsden, M.A.
Fitzhardinge, Grantley Hyde, M.A.
Fitzhardinge, Maude Yeomans, M.A.
Fitzpatrick, Bernard Joseph, B.A., 1897
Fitzpatrick, Edward Bede Lucien, M.B., Ch.M.
Fitzpatrick, Thomas John Augustine, B.A., 1893
Flannery, George Ernest, B.A., 1892, LL.B.
Flashman, Charles Ernest, M.B., 1903
Flashman, James Froude, B.A., B.Sc., M.D., Ch.M.
Flavelle, Lucy Isabel, B.A., 1896
Flecker, Oscar Sydney, M.B., Ch.M.

‡ Examiner. § Admitted *ad eundem gradum*. ¶ Public Teacher.

Fleming, Howard G. T., B.A., 1894
Fletcher, Archibald William, B.A., 1886, B.Sc.
Fletcher, Charles R., B.A., 1881
Fletcher, Frank E., M.A.
Fletcher, Joseph J., M.A.
Fletcher, Katherine Eliz., B.A., 1895
Fletcher, Michael Scott, M.A.,
Flint, Charles A., M.A.
Flynn, John E., M.A.
Flynn, Joseph Alban, M.A.
Flynn, William J., B.A., 1884
Forde, James, B.A., 1891, B.Sc.
Fordyce, Henry St. C., M.B., Ch.M.
Foreman, Hy. Jas. Clifton, B.A., 1896
Foreman, Joseph, M.R.C.S.¶
Forster, Charles E., B.A., 1876
Forster, Redmond Clarence Hall, M.B., Ch.M.
Forsyth, Walter George, B.A., 1898. LL.B.
Fosbery, Eustace E., M.A.
Fox, Harold S., B.A., 1885
Fox, Hedley Ebenezer, M.B., Ch.M.
Foy, Leslie Harold, B.E., 1903
Fraser, Robert W., B.A., 1885
Francis, Henry Ralph, M.A.
Fraser-Hill, Charlotte Elizabeth, B.A., 1902
Freehill, Francis B., M.A.
Freeman, Ambrose William, B.A 1896, B.E.
Freshney, Reg., M.B., Ch.M.
Fry, Florence Mildred, M.A.
Fuller, George W., M.A.
Fullerton, Alexander Y., B.A., 1885
Fullerton, Lottie, M.A. (Mrs. Austin)
Galt, James, B.A., 1899
Garde, Henry Lee, M.B., Ch.M.
Garde, Henry Thomas, B.E., 1903
Garland, James Robert, M.A.
Garland, John, M.A.§
Garnsey, Arthur Henry, M.A.
Garnsey, Edward R., B.A., 1885
Garrick, Joseph Hector, M.A.
Garran, Robert R., M.A.
Geddes, Samuel, B.A., 1885
George, John, B.A., 1893
Gerber, Edward W. T., B.A., 1892, LL.B.
Gibbes, Alfred George, M.A.
Giblin, Norman Ernest, B.E., 1903
Gibson, Alexander J.¶
Gibson, Charles George, B.E., 1900
Gibson, Duncan David, M.B., Ch.M.
Giles, John Porter Harris, B.A., 1903
Gill, Alfred Chalmers, M.A., LL.B.
Gill, J. Macdonald, M.D.‡
Gillam, Dora Alice, M.A.
Gillies, James, B.A., 1889
Gillies, Sinclair, M.D.§
Goddard, Ernest James, B.A., 1904¶
Godsall, Robert Spencer, M.B., Ch.M.
Goergs, Karl R. W., M.B., Ch.M.
Goldsmid, Albert, M.B., 1895
Gordon, Emily Isabel, M.A.
Gordon, George Acheson, B.A., 1895
Gorman, John R., B.A., 1866
Gorringe, Lloyd Septimus, B.E., 1901
Gough, Norman John, B.A., 1900¶
Gould, Hubert John, B.E., 1902
Graham, Emily Rebecca, B.A., 1903
Graham, Sir James, M.B., 1886§¶
Graham, Mabel Jessie, M.B., Ch.M.
Grant, William James, B.A., 1903
Grassick, Charles C., B.A., 1897
Gray, Arthur St. J., M.A.§
Gray, George James, B.E., 1903, B.Sc.¶
Green, Arthur V., LL.D.
Green, Henry Mackenzie, B.A., 1902, LL.B.
Green, Terence Albert, M.B., 1893
Greenham, Eleanor Constance, M.B., Ch.M.
Greenlees, Gavin, B.A., 1895
Greenway, Alfred R., B.A., 1870
Gregson, Edward Jesse, B.A., 1903
Gregson, William Hilder, B.A., 1898 B.E.
Grey, William Charles, M.B., Ch.M.
Grieve, Robert Henry, B.A., 1900
Griffith, Alfred John, M.A.
Griffith, James Shaw, B.A., 1895
Griffith, Rt. Hon. Sir Samuel W., M.A.†
Griffiths, Frederick Guy, B.A., 1898, M.B.
Grogan, Albert Thos. Henry, B.A., 1897

‡ Examiner. § Admitted *ad eundem gradum*. ¶ Public Teacher.
† Fellow of the Senate.

Grut, Charles Frederick de Jersey, B.E., 1901
Gullett, Lucy Edith, M.B., Ch.M.
Hadley, Alfred Edward, B.A., 1893
Hadley, Charles William, B.A., 1899
Halcombe, Charles Digby, M.B., 1902
Hall, Alfred Ernest, B.A., 1893
Hall, Edwin Cuthbert, M.D., Ch.M.
Hall, Ernest Kingsbury, B.E., 1903
Hall, William Hessel, M.A.
Hall, George R. P., B.Sc., M.B., Ch.M.
Halliday, George C., B.A., 1884
Halliday, John Charles W., M.B., Ch.M.
Halloran, Aubrey, B.A., 1892, LL.B.
Halloran, George Henry, B.A., 1896
Halloran, Ida, B.A., 1893 (Mrs. Yabsley)
Halloran (formerly Guérin), Bella, M.A.§
Hammond, Alfred de Lisle, M.A.
Hammond, John Harold, B.A., 1896, LL.B.
Handcock, Charles Lancelot, M.B., Ch.M.
Hankins, George T., M.R.C.S.‡
Hansard, Edith Hirst, B.A., 1897 (Mrs. Hirst)
Hardman, Robert, M.B., 1900
Hargraves, Edw. John, B.A., 1859
Harker, Constance Elizabeth, B.A. 1895
Harker, George, B.Sc. 1899
Harley. Helen Louise, B.A., 1903
Harper, Rev. Andrew, M.A., D.D.‖
Harper, Margaret Hilda, M.B., Ch.M.
Harriott, Charles Warre, B.A., 1889
Harriott, Georgina Jane, B.A., 1894
Harris, Edward, M.A.§
Harris, George, B.A., 1891, LL.B.
Harris, John, B.A., 1892
Harris, John Solomon, M.B., Ch.M.
Harris, Lawrence Herschell Levi, M.B., Ch.M.
Harris, Marian, B.A., 1898, B.Sc.
Harris, Sir Matthew, B.A., 1863
Harris, Reginald Arthur, B.A., 1902
Harris, Samuel Henry, M.B., Ch.M.
Harris, Walter Eli, M.B., Ch.M.
Harris, William Henry, M.B., Ch.M.
Harrison, Edgar Selwyn, M.B., Ch.M.
Hart, Basil Lloyd, M.B., Ch.M.
Harvey, J. M.‡
Harvey, Revina, B.A., 1895
Harvey, William George, B.A., 1894
Harwood, Marian Fleming, B.A., 1898
Haswell, William A., M.A., D.Sc., F.R.S.¶
Hawken, Roger Wm. Hercules, B.E., 1900, B.A.
Hay, Mary Catherine, B.A., 1897
Hayes, David John, B.A., 1894
Hayley, Percy E. L., B.E., 1893
Healy, Patrick J., M.A.
Hedberg, John Alfred, B.A., 1896
Heden, Ernest Charles B., B.A., 1898, B.Sc., B.E.
Helsham, Chas. Howard, B.A., 1892
Henderson, G. Cockburn, B.A., 1893
Henderson, Robert Newburn, B.A., 1895
Henning, Edmund Tregenna, B.E., 1903
Henry, Ada, B.A., 1900
Henry, Arthur, M.B., Ch.M.
Henry, Arthur G., M.B., Ch.M.
Henry, Ida Emily, B.A., 1902
Higgins, Frederick Charles, M.B., Ch.M.
Higgins, Michael A., B.A., 1879
Higgins, Percy Reginald, B.A., 1893, LL.B.
Hill, Evelyn M., B.A., 1895
Hill, George Arthur, M.A.
Hill, James Henry Fraser, B.A., 1900
Hill, James P., D.Sc., F.L.S.¶
Hill, John Goodwin Watson, B.A., M.B., Ch.M.
Hill, Thomas, M.A.
Hilliard, Arthur Vaughan, B.A., 1890
Hills, Henry H., M.A.
Hinder, Henry V.C., M.B., Ch.M.¶
Hinder, Robert John, B.A., 1889
Hinder, W. Septimus, D.D.S.¶
Hinton, William Samuel, B.A., 1902
Hipsley, Alice Ellen, B.A., 1898
Hipsley, Percy Leslie, M.B., Ch.M.

§ Admitted *ad eundem gradum*. ¶ Public Teacher. ‖ Head of College. ‡ Examiner.

Hobbs, Edwin, B.A., 1897
Hobbs, John William, B.A., 1894
Hodge, Ernest Arthur, B.A., 1895
Hodge, Sydney Trevillian, B.A., 1902, LL.B.
Hodgkins, Amy Alice, B.A., 1895 (Mrs. James)
Hodgson, Evelyn G., M.A.§
Hogarth, J. W.¶
Hogg, James E., M.A.§
Hogg, Kate Emily, B.A., 1894
Hole, William Francis, B.E., 1896
Holliday, Andrew, B.A., 1898, LL.B.
Holme, Ernest Rudolph, B.A., 1891¶
Holme, John Barton, B.A., 1893, LL.B.
Holmes, Harry Glennie, M.B., Ch.M.
Holmes, William Fredk., B.A., 1894
Holt, Arthur Christian, B.A., 1895, M.B.
Holt, Edith Jane Katherine, B.A., 1902
Holt, Wilfrid John, M.A.
Hood, Dannina, B.A., 1894 (Mrs. Lanfear)
Hope, Percival, B.A., 1903
Hopkins, Francis Irvine, B.A., 1893
Hopman, John Henry, B.A., 1894
Horniman, Alexander, B.A., 1866
Horton, Marion Charlotte, B.Sc., 1897 (Mrs. White)
Houison, Andrew, B.A., 1869
Houison, James, B.A., M.D.
Houison, Stephen James, B.A., 1898
Howard, John Bruton, B.A., 1895
Hudson, William, M.A.
Huggart, Alfred Theodore, B.A., 1892
Huggart, William Charles, B.A., 1898
Hughes, Charles Michael, B.A., 1886
Hughes, Hugh Jason, B.A., 1897
Hughes, James O'Donoghue A., B.A., 1894
Hughes, Michael O'Gorman, B.A., 1890, B.Sc., M.B.
Humphery, Esca Morris, M.B., Ch.M.
Hungerford, Hedley Heber, B.A., 1886
Hunt, Claude L. W., M.B., Ch.M.
Hunt, Digby St. Clair W., B.A., 1895
Hunt, Fanny E., B.Sc., 1888
Hunt, Hugh Alton Stanislaus, B.A., 1897
Hunter, John, M.A.
Hunter, Mary Alison Miles, B.A., 1895
Hunter, Thomas Brown, B.A., 1898
Hunter, William Allen, M.B., 1902
Hurst, George, M.A.
Hutchinson, George Thos., B.A., 1900
Hynes, Sarah, B.A., 1891
Iceton, Edward Arthur, M.A.
Iceton, Thomas Henry, M.A.
Jack, Robert Lockhart, B.E., 1899
Jackson, Clements F. V., B.E., 1895
Jackson, Frederick Charles, B.A., 1897
Jackson, Frederick Henry, B.E., 1903
Jackson, Henry Latimer, M.A.§
Jackson, John Wm., M.B., Ch.M.
Jackson, Robert, M.A.
Jacobs, James, B.A., 1894
James, Arthur Henry, B.A., 1893
James, Augustus G. F., B.A., 1888
James, George Alfred, B.A., 1893
James, Thomas, B.A., 1896
James, William Edwin, M.A.
Jamieson, G. Wellington, B.A., 1893
Jamieson, Sydney, B.A., 1884¶
Jarrett, Marjorie Kate, B.A., 1901
Jarvie, Bennie, B.A., 1898.
Jefferis, James, LL.D.
Jenkins, Charles J., B.A., 1887
Jenkins, Chas. Warren B., B.E., 1895
Jenkins, E. J., M.D.§‡
Jensen, Klio, M.A.
Johnson, James William, M.A.
Johnson, Martin Luther, B.A., 1893
Johnston, Alexander W., M.A.
Johnston, Ella Russell, B.A., 1890 (Mrs. Martin)
Johnston, John, B.A., 1887
Johnston, Langloh Parker, M.B., Ch.M.
Johnston, Mary Eleanor B.A., 1896 (Mrs. Woodlands)
Johnston, Stephen Jason, B.A., 1894 B.Sc.

‡ Examiner. ¶ Public Teacher. § Admitted *ad eundem gradum*.

Johnstone, Henry T., B.A., 1885
Jones, Albert E., LL.B., 1889§
Jones, Cortis Harry Frederick, M.A.
Jones, Ernest Trevor, B.A., 1884
Jones, G. E. Russell, M.A.
Jones, Sir Philip Sydney, M.D.†‡
Jones, Philip Sydney, M.B., Ch.M.
Jones, Rees Rutland, M.A.
Jones, Richard Theophilus, M.D.
Jones, Thomas, B.A., 1895
Jones, Thomas E., B.A., 1884
Jordan, George Edward Gustavus, B.Sc., 1901
Joseph, Horace B., B.A., 1887
Kater, Norman William, M.B., Ch.M.
Kay, Robert, M.A.
Kay, Stuart, M.B., Ch.M.
Kellett, Frederick, M.A.
Kelly, Patrick J., M.B., 1889
Kelynack, Arthur James, B.A., 1889, LL.B.
Kelynack, Harold Leslie, B.A., 1893
Kemmis, William Henry, B.A., 1890
Kemp, L. Mildred King, B.A., 1902
Kemp, Richard Cyril King, B.A., 1903, LL.B.
Kemp, Richard Edgar, M.A.
Kendall, Frank Louis, B.A., 1893
Kendall, Theodore M., B.A., 1876
Kenna, Patrick J., B.A., 1882
Kennedy, Annie Augusta, B.A., 1893 (Mrs. Atkins)
Kennedy, Emily Clara, B.A., 1895
Kennedy, Philip, M.A.
Kent, Fredk. Deacon, M.A.
Kent, Harry Chambers, M.A.
Kershaw, Joseph Cuthbert, B.A., 1894, LL.B.
Kidston, Robert Matthew, B.A., 1892
Kilgour, Alexander James, B.A., 1894, LL.B.
King, Aubrey Arthur, M.B., Ch.M.
King, Cecil J., M.A.
King, Copland, M.A.
King, Frederick Hart, M.A.
King, George C., B.A., 1887
King, R. W., B.A., 1884§
King, Walter U. S., M.A.
Kinross, John, B.A., 1869
Kinross, Robert Menzies, B.A., M.B., Ch.M.
Klein, James Augustus, B.A., 1897
Knaggs, Saml. Thos., M.D.§
Knox, Adrian, LL.B., 1895§
Knox, Edward William†
Knibbs, George H., L.S.¶
Knight, Arthur, B.A., 1894
Lafferty, Terence Matthew, B.A., 1899
Lamrock, Arthur Stanton, B.A., 1891
Lancaster, Llewellyn Bentley, M.B., Ch.M.
Lance, Elisabeth Ada, M.A.
Lander, William H., M.A.
Lane, Frederick George, B.A., 1895
Lang, John Gavin, M.A.
Langley, Isabella E., B.A., 1897
Langton, Frederick W., B.A., 1887
Langton, William Digan, M.B., Ch.M.
Larcombe, Ernest Rich., B.A., 1902
Larkins, Frank Joseph Moore, B.A., 1902, LL.B.
Lasker, Samuel, M.A.
Latham, Oliver, M.B., Ch.M.
Lawes, Charles Herbert Essery, M.B., Ch.M.
Layton, John Edward, B.A., 1893
Leahy, John Patrick Daunt, B.A., M.B., Ch.M.
Ledger, William Henry, B.E., 1893
Lee, Henry Herbert, M.B., Ch.M.
Lee, Herbert Ernest, B.A., 1886
Lee, Thomas Nelson, B.A., 1899
Lee, William, M.A.
Lees, Geoffrey John, M.B., 1900
Legge, J. Gordon, M.A., LL.B.
Lehane, Thomas Joseph, LL.B., 1903
Leibius, G. Hugo, B.A., 1888
Lenthall, Ellen Melicent, B.A., 1893
de Lepervanche, Eustace Mèzières, B.A., 1900
Leslie, James Robert, M.B., Ch.M.
Lethbridge, Harold Octavius, M.B., Ch.M.
Leverrier, Frank, B.A., 1884, B.Sc.¶
Levy, Daniel, B.A., 1893, LL.B.
Lewis, Henry Clyde, B.A., 1893
Lichtscheindl, Rose, B.A., 1894 (Mrs. Innes)

‡ Examiner. ¶ Public Teacher. § Admitted *ad eundem gradum*.
† Fellow of the Senate.

Liddell, Andrew Innes, M.A.
Liggins, Jessie Hunsdon, B.A., 1899
Lightoller, George Henry Standish, M.B., Ch.M.
Lindsay, William Carlow, B.A., 1903, LL.B.
Lingen, John Taylor, M.A.§
Linsley, Wm. H., B.A., 1880
Lipscomb, Thomas Walter, M.B., Ch.M.
Lister, Henry, M.B., 1892
Litchfield, W. Frederick, M.B., 1893
Little, Vivian Agincourt Spence, B.A., 1903
Littlejohn, Edward S., B.A., 1887
Liversidge, Archibald, M.A., LL.D., F.R.S.¶
Llewellyn, Rees Frank, M.B., 1902
Lloyd, Frederick, M.D.
Lloyd, Thomas, B.A., 1878
Logan, George, B.A., 1903
Lomer, Caroline, M.A. (Mrs. Vidler)
Lord, Frank Colbran Turner, B.A. 1903
Louis, Philip Herbert, M.A.
Loxton, Edward James, M.A.
Ludowici, Edward, M.B., Ch.M.
Luker, Donald, M.B., Ch.M.
Lukin, Gresley W. H., M.A.
Lusby, Sydney Gordon, B.A., 1906¶
Lyden, Michael J., M.D.§
Lydon, James, B.A., 1894
Lynch, Michael D., B.A., 1870
Lynch, William, B.A., 1863
Lyon, Pearson, B.A., 1890
Macansh, Andrew W., B.A., 1885
MacCallum, Mungo W., M.A.¶†
Macarthy, Herbert T. S., B.A., 1860
McCarthy, Arthur W., B.A., 1881
McClelland, Hugh, B.A., 1881
McClelland, Walter Cecil, B.Sc., M.B., Ch.M.
McCook, Adam Stuart, B.A., 1895
McCook, William Henry, B.A., 1900
MacCormick, Alex., M.D.§¶
McCoy, William Taylor, B.A., 1894
McCrae, Arthur Gordon, B.E., 1905
MacCreadie, John Laing M., M.B., Ch.M.
McCredie, Robert Wm., M.B., Ch.M.
MacCulloch, Harrington Thomas Cuthbert, M.B., Ch.M.
McCulloch, Percy V., B.A., 1881
McCulloch, Stanhope H., M.B., Ch.M.‡
McDermott, Vesian B., B.A., 1887
McDonagh, John M., B.A. 1879
Macdonald, Fanny Elizabeth, B.A., 1895
Macdonald, James M., M.A.
Macdonald, Louisa, M.A.§‖
McDonald, Timothy George, B.A., 1903
McDonnell, Æneas J., M.D., Ch.M.
McDonnell, Randall C. W., B.A., 1888
McDowall, James, M.A.
McEncroe, Jas. Michael, M.B., Ch.M.
McEvilly, Augustus, B.A., 1886
McEvilly, Ulric, B.A., 1883
McEvoy, Bertie Patrick, B.A., 1899
McEvoy, John Joseph Stuart, M.B., 1900
McGuinn, Denis, B.A., 1884
MacInnes, Angus, B.A., 1901
Macintosh, Alexander Hay, M.B., Ch.M.
McIntosh, Harold, B.A., 1889
McIntyre, Aug. T., B.A., 1879
McIntyre, Duncan A., B.A., 1888
Mack, Sidney, B.A., 1890, LL.B.
Mack, Augustus Charles, B.E., 1902
McKay, James, B.A., 1896
McKay, William J. Stewart, B.Sc., M.B., Ch.M.
Mackenzie, John, M.B., Ch.M.
Mackinnon, Roger R. S., M.B., Ch.M.
Mackintosh, Bertha Adeline Hilda, B.A., 1899
Mackness, Constance, B.A., 1902
Maclardy, J. D. St. Clair, M.A.
McLaren, Alexander Duncan, M.A., LL.B.
McLaren, John Gilbert, B.A., 1895
McLaughlin, Daniel, B.A., 1890
MacLaurin, Hon. Sir Henry Normand, M.A., M.D., LL.D.†
MacLaurin, Henry Normand, B.A., 1899.

‡ Examiner. ¶ Public Teacher. § Admitted *ad eundem gradum.*
† Fellow of the Senate. ‖ Head of College.

Maclean, Charles Hector Roderick, B.A., 1901
Maclean, Fredk. S., B.A., 1887
McLean, George, M.B., Ch.M.
McLeod, James, B.A., 1879
McLintock, Colin Scott, B.A., 1900
McMahon, Gregan, B.A., 1896
MacManamey, James Frazer, B.A., 1881
MacManamey, John Frazer, B.A., 1889
MacManamey, William Frazer, B.A., 1892
MacMaster, Donald Æneas D., B.A., B.Sc., M.B., Ch.M.
MacMullen, Frank, M.A.
McMurray, Wahab, M.D.§
Macrossan, Hugh Denis, B.A., 1902
McNeil, Andrew, B.A., 1889
McNevin, Arthur Joseph, B.A., 1895
McNevin, Thomas Butler, B.A., 1893
MacPherson, John, M.A., B.Sc., M.B., Ch.M.
MacPherson, Peter, B.A., 1889
MacTaggart, John Norman C., M.E.
McWilliam, Neville Gilbert, B.A., 1903, LL.B.
Madsen, John Percival Vissing, B.Sc., 1900, B.E.
Maffey, Reginald William H., B.A., 1896, M.B.
Magarey, Frank W. A., M.D., Ch.M.
Maher, Charles H., B.A., 1877
Maher, Matthew E., B.A., 1867
Maher, Thomas Francis, B.A., 1893
Maher, W. Odillo, M.D.§‡
Main, John, B.A., 1892
Maitland, Herbert Lethington, M.B., Ch.M.
Makin, William, B.A., 1902
Mallarkey, Ethel May, M.A.
Maloney, Andrew William, B.A., 1893
Maloney, John Thomas, B.A., 1899
Mann, William J. G., M.A.
Mannell, Francis Worthington, B.A., 1892
Manning, Henry Edward, B.A., 1900, LL.B.
Manning, James N., M.A., LL.D.
Manning, Reg. K., B.A., 1887
Manning, William Alexander, M.A.
Manning, W. Hubert, M.A.
Manning, William Ernest, B.A., 1892
Mansfield, Walter Charles, M.B., Ch.M.
Marden, John, LL.D.
Marks, Hyam, B.A., 1892
Marks, Florence, B.A., 1893
Marks, Leah, B.A., 1893
Marks, Percy J., B.A., 1887
Marr, Fannie Augusta, B.A., 1899
Marr, Gordon William Singer, M.B., 1901
Marrack, Jno. Rea M., M.A.
Marsden, Ernest Ambrose, M.B., Ch.M.
Marsh, Harold Seaward, M.B., 1903
Martin, Lewis Ormsby, B.A., 1893, LL.B.
Martyn, Sydney Charles, B.A., 1889
Mason, Thomas William, M.B., 1903
Massey - Makinson, Arthur, B.A., 1903
Massie, Richard de Winton, B.A., 1886
Mate, William H., B.A., 1864
Mathews, Hamilton Bartlett, B.A., 1899
Mathison, Walter, B.A., 1880
Mathison, Walter Charter, B.E., 1899
Mawson, Douglas, B.E., 1902
Mawson, William, M.B., Ch.M.
Maxwell, Henry Francis, B.A., 1895
Maxted, Henry Louis, B.A., 1902
Maynard, Ethel Margaret, B.A., 1894 (Mrs. Peden)
Mayne, Wm. M., M.A.
Mayne, J. O'Neill, B.A., 1884
Maze, William A. A., B.A., 1892
Meagher, Louis Felix, B.A., 1889
Meares, Hercules, B.A., 1893, LL.B.
Meares, Matilda, M.A.
Meek, Herbert Arthur, B.A., 1903
Meillon, John, M.A., LL.B.
Meillon, Joseph, B.A., 1863

§ Admitted *ad eundem gradum.* ‡ Examiner.

Mell, Cecil Newton, B.A., 1894
Menzies, Guy Dixon, M.B., Ch.M.
Merewether, E. A. M., B.A., 1884, B.E.
Merewether, Hugh H. M., B.A., 1894, LL.B.
Merewether, Walton L., M.A.
Merewether, William D. M., B.A., 1895, LL.B.
Merrington, Ernest Northcroft, M.A.
Metcalfe, George, M.A.
Miles, James Albert, B.A., 1894
Millard, Alfred C., B.A., 1885
Millard, Godfrey William, M.A.
Millard, Reginald J., M.B., Ch.M.
Miller, James W., B.A., 1896
Miller, Richard, B.A., 1885
Mills, Arthur E., M.B., Ch.M.
Mills, Elsie Ada Harland, M.A.
Mills, Percy Harcourt, B.A., 1893, LL.B.
Mitchell, David Scott, M.A.
Mitchell, Ernest Meyer, B.A., 1896, LL.B.
Mitchell, Ethel Robertson, B.A., 1898
Molesworth, Edmund Harold, M.B., Ch.M.
Molineaux, Amy Atherton, B.A., 1891
Moloney, Thos. P., B.A., 1885
Molster, Eliza, B.A., 1893 (Mrs. Dowe)
Molster, Sarah, M.A.
Monaghan, John Graham, M.A.
Monahan, William Willis, B.A., 1897, LL.B.
Moncrieff, Edward Woods, M.B., Ch.M.
Monnington, Alfred, M.A.§
Montague, James H., M.A.
Montefiore, Hortense Henriette, B.A., 1896
Montgomerie, John, B.A., 1889
Moore, David C., B.A., 1883
Moore, Frank Joseph S., B.A., 1883
Moore, George, M.D.
Moore, John, B.A., 1883
Moore, Samuel, M.A.
Moore, Verner, B.A., 1884
Moore, Walter Albert, B.A., 1894
Moors, E. M., M.A.¶
More, George Allan, B.E., 1901
Morgan, Fredk. A., B.A., 1888
Morgan, Thos. H. D., B.A., 1892
Morrice, John, B.A., 1874
Morris, John James, B.A., 1895
Morris, Robt. N., B.A., LL.D.
Morrish, Francis, B.A., 1882
Mort, Harold Sutcliffe, B.Sc., 1901
Mort, H. Wallace, M.A.§
Mort, Selwyn Robert, B.E., 1900
Morton, Gavin, M.B., Ch.M.
Morton, John, M.B., Ch.M.¶
Morton, Selby, M.D.
Moseley, Arthur Henry, M.B., Ch.M.¶
Mote, Arnold Rudolph, B.A., 1902
Moulton, James E., B.A., 1892
Moustaka, Orea Emma Hellas, B.A., 1897 (Mrs. Beatty)
Mowbray, Rupert Wallace, B.A., 1903
Mulholland, John Joseph, B.A., 1899
Mullens, Arthur Frank Macquarie, B.A., 1896
Mullins, George Lane, M.D.§
Mullins, John Lane, M.A.
Munro, Wm. J., B.A., 1880, M.D.§
Murray, Charles Edward Robertson, M.A.
Murray, Donald, M.A.
Murray, Florence Jane, M.A. (Mrs. Armitage)
Murray, Geo. Lathrop, M.B., Ch.M.
Murray, Mercy M. H., B.A., 1897
Muscio, Allan, M.B., 1902
Mussmann, Carl Ernst Gottlieb, B.A., 1897
Mutton, Isaiah, B.A., 1900
Myers, David M., B.A., 1866
Myers, Harold Walter, B.E., 1901
Nardin, Ernest Willoughby, B.E., 1894
Nash, John Brady, M.D.§
Nathan, Edward Alleyne, M.A., LL.B.
Nelson, Duncan John, B.A., 1895
Nettleship, Edward, B.A., 1895
Newham, Arthur, B.A.¶
Newman, Ernest Ludlow, M.B., 1903

§ Admitted *ad eundem gradum* ¶ Public Teacher.

Newman, George Hine, B.A., 1887
Newman, James Malcolm, B.E., 1901
Newman, Kelsey Illidge, B.A., 1894
Newsham, Alice Isabel, B.A., 1900
Newton, Alice Sarah, M.B., Ch.M. (Mrs. Newton-Tabrett)
Newton, Henry, B.A., 1889
Newton, William Thomas Joseph, M.B., 1900
Nicholls, William Hunt Ward, B.A., 1891
Nicholson, George Gibb, B.A., 1899¶
Noake, Reginald, B.A., 1877
Noakes, Mabel Alicia, B.A., 1896 (Mrs. Stonham)
Noble, Edmund Murray, M.A.
Nolan, John Henry Monteith, M.A.
Nolan, Herbert Russell, M.B., Ch.M.
Northcote, Right Hon. Henry Stafford, Baron, G.C.M.G., G.C.I.E., C.B.§
Norton, Hon. James, LL.D.*
O'Brien, Agnes Gertrude, B.A., 1895
O'Brien, Francis, M.A.
O'Brien, The Right Rev. Monsignor Jas. J., D.D.‖
O'Brien, Kathleen Moira, B.A., 1894
O'Brien, Lucius, B.A., 1865
O'Brien, Ormond, B.A., 1876
O'Brien, Patrick Daniel, B.A., 1894, LL.B.
O'Connor, Arthur Charles, M.B., Ch.M.
O'Connor, Hon. Mr. Justice R. E., M.A.†
O'Conor, Broughton B., B.A., 1892, LL.B.
O'Donohue, John P. Markham, B.A., 1895, LL.B.
Old, George Greensil, M.B., 1900
Oliver, James, M.A.
Olver, William Reath, M.B., Ch.M.
Oram, A. Murray, M.D.§
O'Keefe, John A., B.A., 1887
O'Keefe, John James, M.B., 1898
O'Mara, Michael, M.A.
O'Neill, James Bernard, B.A., 1895
O'Reilly, Hubert de Burgh, B.A., 1892, LL.B.
O'Reilly, Theophilus Linnell, M.B., Ch.M.
O'Reilly, Susannah Hennessy, B.Sc., 1903
O'Reilly, Walter Creswell, B.A., 1903
O'Reilly, Walter William Joseph, M.D.§
Osborne, Henry Stuart, B.A., 1896
Osborne, John King, M.B., Ch.M.
O'Sullivan, Daniel Roche, B.A., 1901
O'Sullivan, Eugene Francis, B.A., 1901
Oswald, Alfred William, B.A., 1903
Page, Arthur Ernest, B.A., 1899
Page, Earle Christmas Grafton, M.B., Ch.M.
Pain, Allan Franklyn, B.A., 1894
Pain, A. W., B.A., 1884§
Pain, Ernest Maynard, M.B., Ch.M.
Paine, Bennington Haille, B.A., 1893
Paine, George Henry, B.A., 1894
Palmer, Chas. Reginald, M.B., Ch M.
Palmer, Henry Wilfred, M.B., Ch.M.
Palmer, Selina Elizabeth, B.A., 1903
Palmer, Thomas Henry, B.E., 1898
Paris, Jane Elizabeth, B.A., 1897
Parish, Walter G., M.A.
Park, Joseph, M.B., Ch.M.
Parker, Wm. A., B.A., 1892, LL.B.
Parkinson, T. Carlyle, M.B., Ch.M.
Parsons, Emily Waugh, B.A., 1899
Parsons, Joseph, M.A.
Paton, Arthur T., B.A., 1887
Paton, Mary Paterson, B.A., 1902
Pattinson, Anthony Walton, B.A., 1894
Paxton, Betha, M.A.
Peden, John B., B.A., 1892, LL.B.¶
Penman, John Edwards Foggon, B.A., 1897
Perkins, Alfred Edward, M.A., M.B., Ch.M.
Perkins, Frederick Thomas, M.A.
Perkins, Joseph A. R., B.A., 1892
Perkins, Richard, M.B., Ch.M.
Perry, John, M.A.
Perské, Hermann, B.A., 1887
Peterson, Arthur James, B.Sc., 1901, B.E.

† Fellow of the Senate. ¶ Public Teacher. § Admitted *ad eundem gradum.*
*Superior Officer. ‖Head of College.

Petrie, Edith Maud, B.A., 1901
Petrie, James Matthew, D.Sc.
Phillips, Catherine Agnes, B.A., 1896
Phillips, Arthur Bradridge, M.B., Ch.M.
Phillips, Frederick George, B.A., 1902
Phillips, Reginald Bede, B.A., 1902
Pickburn, James P., B.A., 1892, LL.B.
Piddington, Albert Bathurst, B.A., 1883
Piddington, Francis Llewellyn, B.E., 1898
Pike, George H., M.A.
Pilcher, George de Vial, B.A., 1859
Pilcher, Charles E., B.A., 1865
Pilcher, Norman George Stafford, B.A., 1898, LL.B.
Pincombe, Torrington Hawke, B.A., 1890
Pitt, Arthur Gladstone Matcham, B.A., 1902, LL.B.
Plomley, Francis James, M.A.
Plomley, Morris James, M.B., Ch.M.
Plume, Henry, M.A.§
Pockley, Eric Osbaldiston, M.B., Ch.M.
Pockley, F. Antill, M.B., 1888§¶
Pockley, Norman V., D.D.S.¶
Poidevin, Leslie Oswald Sheridan, B.A., 1900
Pollock, James Arthur, D.Sc.¶
Poole, William, B.E., 1900
Poolman, Arthur Edward, B.A., 1883
Pope, Roland J., B.A., 1885
Potts, Cuthbert, B.A., 1898
Powell, Theodore, M.A.
Power, F. Danvers¶
Power, John Wardell, M.B., Ch.M.
Power, Percy Horne, B.A., 1901
Pratt, Frederick V., M.A.‡
Pratt, Walter Henry, B.A., 1901
Prentice, Arthur J., B.A., 1892
Pring, Robert Dorlow, M.A.
Pritchard, Alice, B.A., M.B., Ch.M.
Pritchard, Wm. Clowes, B.A., 1888
Proctor, Lizzie, M.A. (Mrs. Cocks)
Pulleine, Robert Henry, M.B., 1898
Purcell, Philip Francis, B.A., 1898
Purcell, Winifred Dalton, B.A., 1895
Purser, Cecil, B.A., M.B., Ch.M.
Purves, John Mitchell, M.A.
Quaife, Frederick Harrison, M.A.
Quaife, William F., B.A., 1879
Quick, Sir John, LL.B., 1881§
Quigley, James, B.A., 1890
Ralston, Alexander G., M.A.
Ramsay, James, B.A., 1885
Raves, George Alfred, B.A., 1897
Raves, Helen Alice, B.A., 1894
Read, Elizabeth Jane, B.A., 1899
Read, William Henry, M.B., Ch.M.
Reading, P. B., L.D.S.‡
Reading, R. Fairfax, M.R.C.S., L.D.S.¶
Redshaw, George, B.A., 1895
Rees, Walter Llewellyn, M.B., Ch.M.
Reid, Norman, B.E., 1898
Reid, Violet Margaret, B.A., 1902
Reidy, John Jas. Gralton, B.A., 1896
Rennie, Edward H., M.A.
Rennie, George E., B.A., 1882¶
Renwick, Hon. Sir Arthur, B.A., 1857, M.D.†
Renwick, Herbert John, B.A., 1893
Reynolds, Arthur J. P. G., B.A., 1890
Reynolds, Reginald Blair, M.A.
Rich, George E., M.A.¶
Richards, Samuel J., M.B., Ch.M.
Richardson, Charles Noel Derwent, B.A., 1893, LL.B.
Richardson, Rosslyn James Dalyell, B.E., 1903
Richardson, Henry A., B.A., 1867
Rigg, Thomas, M.A.
Riley, Ernest Arthur, M.A.
Riley, Patrick William, B.A., 1894
Riley, Spencer George Birkenhead, B.A., 1897
Riley, Valentine B., B.A., 1872
Roberts, Alfred John Spencer Cecil, M.B., Ch.M.
Roberts, James W., B.E., 1892
Roberts, Thomas Taylor, B.A., 1903
Robertson, Joseph, M.A.
Robertson, Lionel Joseph, M.B., 1903

† Fellow of the Senate. § Admitted *ad eundem gradum*. ¶ Public Teacher. ‡ Examiner.

Robinson, Charles H. P., B.A., 1893
Robinson, George Frederick Greenwell, B.A., 1890
Robinson, Grace Fairley, M.B., Ch.M. (Mrs. Boelke)
Robinson, Mabel Fuller, B.A., 1890 (Mrs. Windeyer)
Robjohns, Leonard, B.A., 1894
Robson, Wm. Elliott Veitch, B.A., 1889
Robson, Reginald Norman, B.A., 1900, LL.B.
Roe, James Martin, M.B., 1900
Rofe, John F., M.A.
Rogers, Francis Edward, M.A., LL.B.†
Rogers, William Arnott Halse, LL.B., 1903
Rolin, Tom, M.A.
Rooney, William J., B.A., 1892
Roseby, Edmund Rupert, M.B. Ch.M.
Roseby, Gertrude Amy, B.A., 1895
Roseby, Minnie, B.A., 1895
Roseby, Sarah Mabel, B.A , 1900
Roseby, Thomas, M.A., LL.D.
Roseby, Thomas Ernest, M.A.
Ross, Chisholm, M.D.¶
Ross, Colin John, B.E., 1891 §
Ross, William John Clunies, B.Sc., 1891 §
Rossiter, Florence Annie, B.A., 1898 (Mrs. D. M. Cooper)
Roth-Schmidt, Frederica, B.A., 1897
Rourke, Ernest John, B.A., 1893
Rourke, George Augustus, B.A., 1893
Rourke, Lillie Agnes, B.A., 1895
Rowan, Thomas, M.D.
Rowland, Norman de Horne, B.A., 1895, LL.B.
Rowlands, Harold Berkeley, B.E., 1897
Rudder, Sydney Llewellyn, B.A., 1891
Russell, Charles Townsend, B.A., 1891
Russell, Edward, M.A.
Russell, Ethel Albinia, B.A., 1893
Russell, Francis Alfred Alison, M.A.
Russell, Harry A., B.A., 1887
Russell, Henry Chamberlaine, B.A., 1859, C.M.G., F.R.S.†
Russell, Jane Foss, M.A. (Mrs. Barff)
Russell, John F. S., M.A.
Russell, Lillian, B.A., 1891 (Mrs. King)
Russell, William. M.A,
Rutherford, Constance Muriel, B.A., 1903
Rutherford, Florence Marion, B.A., 1900
Rutherford, George Washington, B.A., 1900, LL.B.
Rutledge, William F., B.A., 1871
Ryan, Gerald, B.A., 1893
Ryan, James William, B.A., 1901
Rygate, Chas. D. H., B.A., 1883
Rygate, Henry B., B.A., 1885
Rygate, Philip William, M.A., B.E.
Saddington, Arthur G., B.A., 1887
Sadler, Alexander, B.A., 1900
Sadler, Henry Frank, M.B., 1903
Salting, George, B.A., 1857
Sandes, Francis Percival, M.D., Ch.M.
Sandford, Blanche Vavasour, B.A., 1902
Sands, Jno. Marshall, B.A., 1889
Sapsford, Clinton Pelham, M.B., Ch.M.
Saunders, Arthur, B.A., 1893
Saunders, Eva Florence, B.A., 1897
Saunders, Florence Louisa, B.A., 1903
Savage, Vincent Wellesley, M.B., Ch.M.
Savage, Edward Joseph, M.B., Ch.M.
Sawkins, Dansie Thomas, M.A.
Sawkins, Frederick John T., M.B., Ch.M.
Sawyer, Basil, B.E., 1896
Saxby, George Campbell, B.A., 1891
Saywell, Thomas Stanley, B.A., 1900 LL.B.
Scarvell, Edric Sydney, B.A., 1893, LL.B.
Schofield, James A., A.R.S.M., F.C.S.¶
Scot-Skirving, Robert, M.B., 1888§¶

† Fellow of the Senate. ¶ Public Teacher. § Admitted *ad eundem gradum*.

Scott, Edward Henry, M.B., Ch.M.
Scott. Ernest Kilburn, M.I.E.E., A.M. Inst. C.E.¶
Scoular, David, B.A., 1895, LL.B.
Scrutton, Caroline Maude, B.A., 1900
Seale, Herbert Percy, B.E., 1894
Seaward, William T., B.A., 1892
Seldon, Florence Mary, B.A., 1894 (Mrs. Stobo)
Seldon, William, M.B., 1902
Sellors, Richard P., B.A., 1890
Sendall, Alfred E., B.A., 1888
Serisier, Lavigne Ernest, B.A., 1891
Shand, Alexander B., B.A., 1884
Sharpe, George Frederick, B.A., 1903
Shaw, Frederick C. S., M.B., Ch.M.
Shaw, Henry Giles, M.A.
Shaw, John A. K., B.A., 1885
Sharp, Granville Gilbert, B.Sc., M.B., Ch.M.
Sharp, Rev. Canon W. Hey, M.A.‖§
Sharp, Walter Alexander Ramsay, B.A., M.B., Ch.M.
Sharpe, Ernest, B.A., 1865
Sharpe, William George, B.A., 1897
Sheldon, Herbert, M.B., Ch.M.
Sheldon, Stratford, B.Sc., M.B., Ch.M.
Shellshear, Cyril, M.B., Ch.M.
Sheppard, Arthur Murray, M.B., Ch.M.
Sheppard, Edmund Haslewood, B.A., 1882
Sheppard, George, B.A., 1873
Sheridan, Francis B., B.A., 1874
Sheridan, John Patrick, B.A., 1890
Sheridan, Muriel Eulalie Bingham, B.A., 1900
Sherlock, John Bolt, B.A., 1895
Shewcroft, Alfred John, B.A., 1893
Shirley, John, B.Sc., 1887§
Shirlow, Syd. S., M.B., Ch.M.
Shirlow, Wm. J., M.B., Ch.M.
Shorter, Herbert Leopold Ashton, M.B., 1899
Simpson, Hon. Mr. Justice Archibald Henry, M.A.§†
Simpson, Edward S., B.E., 1895
Simpson, Francis G. M., M.B., Ch.M.
Sinclair, Colin Archibald, B.A., 1899, LL.B.
Sinclair, Eric, M.D.‡
Slack, Ida Leslie, M.A.
Slade, Oswald Carey, B.A., 1903, LL.B.
Slee, Richard Thilthorpe, B.E., 1901
Sloman, C. Wansbrough, B.A., 1893
Sloman, John, B.A., 1872
Sly, George J., M.A., LL.D.
Sly, Joseph D., M.A., LL.D.
Sly, Richard Meares, M.A., LL.D.
Smail, Herbert Stewart Inglis, B.E., 1897
Smairl, Joseph Henry, M.A.
Small, Ethel Ella, M.A.
Smee, Reginald, B.A., 1901
Smith, Archibald, B.A., 1889
Smith, Emma Isabel, B.A., 1893
Smith, Grafton Elliott, M.D., Ch.M.
Smith, Norman, B.A., 1894
Smith, Percy Edward Walton, M.B., Ch.M.
Smith, Robert, M.A.
Smith, Stewart Arthur, M.B., Ch.M.¶
Smith, William S., M.A.
Smith, William, B.A., 1902
Smith, William Michael, M.A.
Smyth, Frank L. S., M.A.
Somerville, George B., B.A., 1882
Spark, Ernest J. T., M.B., Ch.M.
Spier, Reginald Vincent, B.E., 1902
Sproule, Margaret, B.A., 1903
Squire, Hilton Bell, B.A., 1893
Stack, John, M.A.
Stacy, Fitzroy Somerset, B.A., 1897, LL.B.
Stacy, Harold Skipton, M.D., Ch.M.
Stanley, Frederick Vernon, B.E., 1902
Stanley, George P., M.B., Ch.M.
Steel, Robert, M.A.
Stephen, Cecil Bedford, M.A.†
Stephen, Edgar Horatio Milner, M.B., Ch.M.
Stephen, Edward Milner, B.A., 1891
Stephen, Henry Montagu, B.A., 1900, LL.B.
Stephen, John Wm. Farish, B.A., 1897
Stephens, Charles T., B.E., 1892

† Fellow of the Senate. § Admitted *ad eundem gradum.* ‡ Examiner.
¶ Public Teacher. ‖ Head of College.

Stephenson, Anita Leila, B.A., 1901
Stephenson, John Hunter, M.A.
Stevens, Wm. Woodburn, M.B., Ch.M.
Stevenson, William Henry Webster, B.A., 1903
Stewart, Alexander Hay, B.E., 1902
Stewart, Charles, M.D.
Stewart, Donald Grant, B.A., 1896
Stewart, James Robert, B.A., 1903
Stiles, Bernard Tarlton, M.B., Ch.M.
Stokes, Edward S., M.B., Ch.M.
Stoney, Edmund Heighton, B.A., 1898
Stonham, John, M.A.
Stonham, Kathleen, B.A., 1895 (Mrs. Willis)
Stoyles, Herbert George, M.A.
Street, Charles James, B.A., 1894
Street, Philip Whistler, B.A., 1883
Strickland, Tom Percival, B.E., 1897
Stuart, T. P. Anderson, M.D.§, LL.D.†¶
Stuckey, Francis Seavington, M.B., Ch.M.
Studds, Harold Augustus, B.A., 1900
Studdy, Albert J., B.A., 1888
Studdy, Annie Avice Matilda, B.A., 1898
Studdy, William B., M.B., Ch.M.
Suckling, Frank Martin, M.B., Ch.M.
Sulman, John, F.R.I.B.A.¶
Sullivan, Denis Joseph, B.A., 1899
Sullivan, Henry, B.A., 1872
Sullivan, James, B.A., 1894
Sullivan, James, B.A., 1867
Sullivan, Reg., B.A., 1892, LL.B.
Sutherland, Constance A., M.A.
Sutherland, Elmina L., B.A., 1891
Sutherland, Peter, B.A., 1890
Swanwick, Kenneth ffoulkes, B.A., 1896, LL.B.
Sweet, Geoffrey Bruton, M.B., 1893
Swynny, William Frank, B.A., 1899
Symonds, Bertha Violet, B.A., 1897
Symonds, Daisy, B.A., 1893
Tange, Charles L., B.A., 1880
Tange, Frank Septimus, M.B., Ch.M.
Tarleton, John Willington, M.B., 1902
Tarplee, W. F., B.A., 1884
Taylor, Charles, M.D.
Taylor, Charles James, M.B., Ch.M.
Taylor, Elizabeth Ironside, M.A. (Mrs. Bowden)
Taylor, Hugh W., M.A.
Taylor, James Wilson, M.A.§
Taylor, John M., M.A., LL.B.
Taylor, Sarah, B.A., 1893
Taylor, Thomas Griffith, B.Sc., 1904, B.E.¶
Taylor, Thomas Manning, B.A., 1901
Teece, Richard, F.I.A., F.F.A.†
Teece, Richard Clive, M.A., LL.B.‡
Teece, Roy Noel, M.A., LL.B.
Telfer, James Barnet, M.A.
Torrey, Hedley, M.B., Ch.M.
Thallon, James B., B.A., 1876
Thomas, David, B.E., 1902
Thomas, George Bowen, M.B., Ch.M.
Thomas, Richard Weld, B.A., 1893
Thompson, Alexander, B.A., 1895
Thompson, I. Florence, M.A.
Thompson, James A., M.A.
Thompson, Joseph, M.A., LL.B.
Thompson, Robert Alfred, B.A., 1891
Thompson, Sydney A., B.A., 1887
Thompson, Wm. Mann, M.A., B.E.
Thomson, Alec., B.A., 1891, LL.B.
Thomson, Jack Mowbray, M.B., Ch.M.
Thomson, Jean Graeme, M.B., Ch.M.
Thorburn, James Thomas, B.A., 1886
Thorne, George, B.A., 1865
Thornton, Septimus, B.A., 1896
Throsby, Herbert Zouch, M.B., 1898
Tidswell, Frank, M.B., Ch.M.
Tighe, William, B.A., 1892, LL.B.
Tivey, John Proctor, B.A., 1902
Todd, Frederick Augustus, B.A., 1901, Ph.D.¶
Tole, Joseph, B.A., 1869, LL.B.
Tom, Wesley, B.A., 1860
Townley, Percy Langford, B.A., M.B., Ch.M.
Tozer, Seymour Darvall, B.A., 1899, LL.B.
Tracey, Frederick, M.A.
Trebeck, Tom Beal, M.A.
Trindall, Richard B., B.A., M.B., Ch.M.

‡ Examiner. § Admitted *ad eundem gradum*. ¶ Public Teacher.
† Fellow of the Senate.

Try, John Cowley, B.E., 1902
Tudor-Jones, Evan, M.B., Ch.M.
Turner, Annie Elizabeth, B.A., 1899
Turner, Emily May, M.A.
Turner, Basil W., A.R.S.M.¶
Twynam, Henry, B.E., 1896
Ure, Edith, M.B., Ch.M.
Ure, Sarah Louisa, M.B., Ch.M.
Uther, Allan Hammill, B.A., 1891, LL.B.
Uther, Jennie Bertha, B.A., 1894
Uther, Mary Handfield. M.A.
Vallack, Arthur Styles, M.B., Ch.M.
Varley, Charles Grant, LL.B., 1902§
Veech, Michael, M.B., Ch.M.
Veech, Louis Stanislaus, B.A., 1890, LL.B.
Verco, Sydney Manton, M.B., Ch.M.
Verco, Clement Armour, M.B., Ch.M.
Verge, Arthur, M.B., Ch.M.
Verge, John, B.A., 1899, B.E.
Vernon, Murray Menzies, M.B., Ch.M.
Vicars, James, M.E.
Vickery, Ebenezer Frank, B.A., 1901, LL.B.
Vivers, George Arthur, M.B., Ch.M.
Vonwiller, Oscar Ulric, B.Sc., 1902¶
Waddell, Annie, B.A., 1895 (Mrs. Thomas)
Waddell, George Washington, M.A., LL.D.
Waddy, Percival Richard, B.A., 1891, LL.B.
Wade, Robert Blakeway, M.D.
Waldron, Thomas W. King, B.A., 1893, LL.B.
Walker, Hugh, B.E., 1903
Walker, James Ernest, B.A., 1894, LL.B.
Walker, Samuel Herbert, B.A., 1894
Walker, William A., B.A., 1888
Wallace, Donald, M.A., M.B.
Wallace, F. E., B.A., 1889, LL.B.
Wallach, Bernard, B.E., 1897
Walsh, John James, B.A., 1899
Walsh, William M. J., M.A.
Walton, George Henry Montague, B.A., 1899, LL.B.
Walton, John Francis, M.B., 1903
Walton, William Bain, M.B., Ch.M.
Walton, S. G.¶
Ward, Leonard K., B.A., 1900, B.E.
Ward, Ruby Estelle, B.A., 1897
Ward, Thomas W. C., B.A., 1884, B.E.
Wardrop, Gabriel, B.A., 1893
Wardrop, Maggie Robertson, B.A., 1903
Wark, Florence Helen, M.A.
Warren, Ernest William, B.E., 1897, B.A., LL.B.
Warren, William Edward, M.D.§
Warren, William Henry, M.I.C.E.¶
Wassell, Joseph Leathom, M.B., Ch.M.
Waterhouse, Eben Gowrie, B.A., 1903
Waterhouse, Gustavus Athol, B.Sc., 1899, B.E.
Waterhouse, John, M.A.
Watkins, John Leo, M.A.
Watson, Herbert Frazer, B.A., 1903, LL.B.
Watson, James Frederick, M.B., Ch.M.
Watson, William Geo., M.A.
Watson, Robert S., B.A., 1887
Watt, Andrew Robert James, B.A., 1893, LL.B.
Watt, Charles Prosper, B.A., 1893
Watt, John Alexander, M.A., B.Sc.
Waugh, Richard Andrew Phipps, M.B., 1903
Waugh, Robert, M.A.
Wearne, Amy Isabel, B.A., 1893
Wearne, Minnie F., M.A.
Wearne, Richard Arthur, B.A., 1895
Weatherburn, Charles Ernest, M.A.
Weigall, Albert Bythesea, M.A.
Weigall, A. Raymond, B.E., 1894
Weigall, Harold Walter, B.A., 1895
Weigall, Henry Stewart, B.E., 1903
Wellisch, Edward Montague, M.A.
Welch, John Basil St. Vincent, M.B., Ch.M.
Welsh, David Arthur, M.A., B.Sc., M.D.¶
Wentworth, Fitzwilliam, M.A.

¶ Public Teacher. § Admitted *ad eundem gradum.*

West, Edith Annie, B.A., 1900
West, Francis William, M.B., Ch.M.
Weston, Percy Leonard, B.Sc., 1901 B.E.
Wheeler, Harold Charles Fearon, B.A., 1902
White, Charles Alfred, B.A., 1895
White, Norman Frederick, B.E., 1894
White, W. Moore, LL.D.§
Whiteman, Reginald John Nelson, M.B., Ch.M.
Whitfeld, Eleanor Madeline, B.A., 1895 (Mrs. Wood)
Whitfeld, Hubert E., B.A., 1897, B.E.
Whitfeld, Lewis, M.A.
Whiting, Joseph, B.A., 1895
Wilkinson, Fredk. B., M.A.
Wilkinson, Henry L., B.A., 1880
Wilkinson, Ida Beatrice, B.A., 1903
Wilkinson, W. Camac, B.A., 1878, M.D.¶
Williams, A. Lukyn, M.A.§
Williams, Alfred James, B.A., 1898
Williams, James L., B.A., 1892
Williams, John Alfred, B.A., 1894
Williams, Leslie Ballesat, B.A., 1899, B.E.
Williams, William, B.A., 1891
Williams, William, B.A., 1895
Williams, Wm. Henry, B.A., 1894
Williamson, Mark A., B.A., 1879
Williamson, Percy Leyden, B.A., 1899
Willis, Charles Savill, M.B., Ch.M.
Willis, Robert Spier, M.A.
Wilshire, Hector, M.A.
Wilson, David, M.A.
Wilson, Ella, M.A.
Wilson, Frederick James, B.A., 1893
Wilson, George Harry, B.A., 1901, LL.B.
Wilson, Gwendolene Lilian, B. A., 1900
Wilson, John Bowie, B.E., 1897
Wilson, Jas. T., M.B., Ch.M.¶
Wilson, Richd. Cunliffe, B Sc., 1901, B.E.
Wilson, Roger, B.A., 1877
Wilson, Thos. George, M.D., Ch.M.
Wilton, Edward Nowill, B.A., 1900
Windeyer, John Cadell, M.D., Ch.M.
Windeyer, Richard, B.A., 1891
Windeyer, William Archibald, B.A., 1893
Winton, Louis Joseph, B.E., 1901
Wise, Bernhard R., B.A., 1885§
Withycombe, Ernest John, B.A., 1899
Wolstenholme, Harry, B.A., 1890
Wood, Ebenezer C., M.A., B.Sc., B.E.
Wood, Fredk. Ernest, B.A., 1890
Wood, Frederick William, B.A., 1894
Wood, George Arnold, M.A.¶
Wood, Henry, B.E., 1903
Wood, James Patrick, B.E., 1895
Wood, Harrie Dalrymple, B.A., 1893, LL.B.
Woodburn, Joseph William, B.E., 1903
Woodd, Henry A., B.A., 1887
Woodhouse, William John, M.A.¶
Woodthorpe, Robert A., M.A.
Woodward, Frederick P., B.A., 1892
Woolcock, John L., B.A., 1883
Woolnough, Geo., M.A.
Woolnough, Robert Edmund, M.B., Ch.M.
Woolnough, Walter Geo., D.Sc.¶
Wootton, Ernest, B.A., 1892
Woore, John Morris Simeon, B.E., 1896
Worrall, Ralph, M.D.§
Wright, Stewart, B.A., 1882
Wyatt, Arthur H., M.A.
Wylie, Mary Wilhelmina, M.B., Ch.M.
Yarnold, Alfred Henry, M.A.
Yarnold, Isabel May, B.A., 1899.
Yarrington, Clive T. L., M.A.
Yarrington, W. H. H., M.A., LL.B.
Yeates, Ainslie Arthur, M.A.
Yeomans, Allan, M.A.
Young, Edgar Harold, M.B., Ch.M.
Young, James, B.A., 1900, LL.B.
Zlotkowski, Frederick Sobieski Wladimir, M.B., Ch.M.

¶ Public Teacher, § Admitted *ad eundem gradum.*

GRADUATES.

MASTERS OF ARTS.

Anderson, Catherine, 1901
Anderson, Francis, 1890 §
Anderson, Henry C. L., 1878
Backhouse, Alfred P., 1873
Barber, Richard, 1889
Barbour, George Pitty, 1889
Barff, Henry E., 1882
Barlee, Frederick Rudolph, 1884
Barnes, Pearl Ella, 1905
Barton, Edmund, 1870
Binns, William Johnstone, 1902
Blumer, George Alfred, 1897
Board, Peter, 1891
Bowden, John E., 1863
Bowmaker, Ruth, 1895
Bowman, Andrew, 1864
Bowman, Edward, 1864
Brennan, Christopher J., 1897
Brennan, Francis P., 1882
Brennan, Sarah O., 1891
Brierley, Frank Nunan, 1893
Broughton, Alfred, 1870
Brown, George Edward, 1900
Bucknell, D'Arcy H., 1886
Campbell, Edward, 1884
Campbell, Gerald R., 1885
Campbell, Joseph, 1882
Cape, Alfred John, 1867
Carruthers, Joseph H., 1878
Castleman, Arthur, 1906
Chalmers, Stephen Drummond, 1899
Chambers, George Alexander, 1904
Cocks, Nicholas John, 1892
Coghlan, Charles A., 1879
Cohen, John J., 1881
Cole, Percival Richard, 1905
Cooper, David J., 1871
Cooper, Pope A., 1874
Cordingley, Grace Marion, 1903
Cormack, Alexander J., 1886
Cowlishaw, William Patten, 1862
Cowper, Sedgwick S., 1870
Cramp, Karl Reginald, 1906
Crawford, Thomas Simpson, 1904
Cribb, Estelle Muriel Bridson, 1901
Cribb, John George, 1893
Crocker, Herbert D., 1886
Crompton, William, 1876
Cullen, William Portus, 1882
Curtis, William C., 1859
Curtis, William John, 1903
Dalton, Gerald T. A., 1882
Davies, Edith Warlow, 1901
Dawson, Arthur F., 1877
Dawson, James, 1903§
Deane, Henry, 1893§
Deane, William Smith, 1884
Delohery, Cornelius, 1888
Dennis, James, 1897
Dillon, John T., 1876
Docker, Ernest B., 1865
Doust, Edith Lucy, 1898
Dunstan, Ephraim, 1870
Edmunds, Walter, 1879
Edwards, J. Ross, 1884
Edwards, Edwd. Samuel, 1898
Eldridge, Ada Maitland, 1903
Faithfull, George E., 1869
Faithfull, Henry M., 1871
Faithfull, William P., 1868
Fisher, Donnelly, 1875
Fitzgerald, Robert M., 1859
Fitzhardinge, Grantley H., 1869
Fitzhardinge, Maude Yeomans, 1901
Fletcher, Frank E., 1883
Fletcher, Joseph J., 1876
Fletcher, Michael Scott, 1902
Flint, Charles Alfred, 1884
Flynn, John, 1879
Flynn, Joseph A., 1881
Fosbery, Eustace E., 1881
Francis, Henry R., 1870
Freehill, Francis B., 1876
Fry, Florence Mildred, 1905
Fuller, George W., 1882
Fullerton, Lottie (Mrs. Austin), 1905
Garland, James R., 1862
Garland, John, 1905§
Garnsey, Arthur Henry, 1896
Garran, Robert Randolph, 1899
Garrick, Joseph H., 1871
Gibbes, Alfred George, 1875
Gill, Alfred Chalmers, 1899

§ Admitted *ad eundem gradum*.

Gillam, Dora Alice, 1903
Gordon, Emily Isabel, 1902
Gray, Arthur St. J., 1887 §
Griffith, Alfred John, 1896
Griffith, Samuel W., 1870
Hall, William Hessell, 1890
Halloran (*née* Guérin), Bella, 1892 §
Hammond, A. de Lisle, 1884
Healy, Patrick J., 1877
Hill, George Arthur, 1899
Hill, Thomas, 1878
Hills, Henry H., 1880
Hodgson, Evelyn G., 1881 §
Hogg, James E., 1890 §
Holt, Wilfred John, 1902
Hudson, William, 1902
Hunter, John, 1869
Hurst, George, 1882
Iceton, Edward Arthur, 1870
Iceton, Thomas H., 1872
Jackson, Henry Latimer, 1886 §
Jackson, Robert, 1880
James, William Edwin, 1903
Jensen, Klio, 1905
Johnson, James W., 1859
Johnston, Alexander W., 1876
Jones, Griffith E. R., 1877
Jones, Cortis Harry Frederick, 1902
Jones, Rees R., 1872
Kay, Robert, 1876
Kellett, Frederick, 1895
Kemp, Richard E., 1873
Kennedy, Philip, 1903
Kent, Frederick D., 1874
Kent, Harry C., 1875
King, Cecil J., 1887
King, Copland, 1887
King, Frederick H., 1876
King, Walter Uther S., 1884
Lance, Elisabeth Ada, 1900
Lander, William H., 1882
Lang, John Gavin D., 1884
Lasker, Samuel, 1903
Lee, Edward, 1859
Lee, William, 1878
Legge, J. Gordon, 1887
Liddell, Andrew I., 1875
Lingen, John Taylor, 1881 §
Lomer, Caroline, 1891
Louis, Philip Herbert, 1904
Loxton, Edward James, 1888
Lukin, Gresley W. H., 1891
MacDonald, Jas. M., 1879
McDowall, James, 1905
Macdonald, Louisa, 1892 §
McLaren, Alexander Duncan, 1903
Maclardy, J. D. St. Clair, 1883
MacMullen, Frank, 1901
MacPherson, John, 1895
Mallarkey, Ethel May, 1906
Mann, William J. G., 1882
Manning, Jas. Napoleon, 1885
Manning, William A., 1875
Manning, W. Hubert, 1878
Marrack, John Rea Melville, 1884
Mayne, Wm. M., 1884
Meares, Matilda, 1892
Meillon, John, 1888
Merewether, Walton L., 1879
Merrington, Ernest Northcroft, 1903
Metcalfe, George, 1868
Millard, Godfrey William, 1896
Mills, Elsie Ada Harland, 1903
Mitchell, David S., 1859
Molster, Sarah, 1904
Monaghan, John Graham, 1902
Monnington, Alfred, 1888 §
Montague, James H., 1877
Moore, Samuel, 1882
Mort, H. Wallace, 1881 §
Mullins, John Lane, 1879
Murray, Charles E. R., 1865
Murray, Donald, 1892
Murray, Florence Jane (Mrs. Armitage), 1905
Nathan, Edward A., 1882
Noble, Edmund Murray, 1890
Nolan, John Henry Monteith, 1903
Northcote, Rt. Hon. Henry Stafford, Baron, G.C.M.G., G.C.I.E., C.B., 1906 §
O'Brien, Francis, 1868
O'Connor, Richard E., 1873
O'Mara, Michael, 1877
Oliver, James, 1885
Parish, Walter G., 1866
Parsons, Joseph, 1904
Paxton, Betha, 1903
Perkins, Alfred Edward, 1886
Perkins, Frederick Thomas, 1901

§ Admitted *ad eundem gradum*.

Perry, John, 1876
Pike, George H., 1891
Plomley, Francis James, 1876
Powell, Theodore, 1876
Pring, Robert D., 1875
Proctor, Lizzie, 1898
Purves, John M., 1873
Quaife, Frederick H., 1862
Ralston, Alexander G., 1883
Rennie, Edward H., 1876
Reynolds, Reginald Blair, 1903
Rich, George E., 1885
Rigg, Thomas, 1890
Riley, Ernest Arthur, 1905
Robertson, Joseph, 1877
Rofe, John F., 1885
Rogers, Francis E., 1863
Rolin, Tom, 1885
Roseby, Thomas, 1871
Roseby, Thomas Ernest, 1901
Russell, Edward, 1880
Russell, Frank A. A., 1894
Russell, Jane Foss, 1889
Russell, John Frazer S., 1896
Russell, William, 1882
Rygate, Philip William, 1886
Sawkins, Dansie Thomas, 1902
Sharp, William Hey, 1881§
Shaw, Henry Giles, 1894
Simpson, Archd. H., 1895
Slack, Ida Leslie, 1901
Sly, George J., 1874
Sly, Joseph D., 1872
Sly, Richard M., 1876
Smairl, Joseph Henry, 1896
Small, Ethel Ella, 1902
Smith, William Michael, 1904
Smith, William S., 1905
Smith, Robert, 1878
Smyth, Frank L. S., 187
Stack, John, 1860
Steel, Robert, 1879
Stephen, Cecil B., 1864
Stephenson, John Hunter, 1892
Stonham, John, 1896
Stoyles, Herbert George, 1904
Sutherland, Constance Adelaide, 1889
Taylor, Elizabeth Ironside, 1899
Taylor, Hugh W., 1884
Taylor, James Wilson, 1887§
Taylor, John Michael, 1891
Teece, Richard Clive, 1901
Teece, Roy Noel, 1904
Telfer, James Barnet, 1903
Thompson, I. Florence, 1887
Thompson, James A., 1882
Thompson, Joseph, 1875
Thompson, William M., 1875
Tracey, Frederick, 1885
Trebeck, Tom Beal, 1884
Turner, Emily May, 1902
Uther, Mary Handfield, 1904
Waddell, George Washington, 1900
Wallace, Donald, 1899
Walsh, William M. J., 1889
Wark, Florence Helen, 1905
Waterhouse, John, 1876
Watkins, John L., 1876
Watson, William George, 1873
Watt, John Alexander, 1892
Waugh, Robert, 1879
Wearne, Minnie, 1892
Weatherburn, Charles Ernest, 1906
Weigall, Albert B., 1869
Wellisch, Edward Montague, 1906
Wentworth, Fitzwilliam, 1876
Whitfeld, Lewis, 1882
Wilkinson, Frederick Bushby, 1884
Williams, A. Lukyn, 1881§
Willis, Robert Spier, 1862
Wilshire, Hector, 1904
Wilson, David, 1903
Wilson, Ella, 1895
Wood, Ebenezer Clarence, 1886
Woodthorpe, Robert A., 1890
Woolnough, George, 1873
Wyatt, Arthur H., 1869
Yarnold, Alfred Henry, 1903
Yarrington, Clive Tennyson L., 1895
Yarrington, William Henry H., 1880
Yeates, Ainslie Arthur, 1900
Yeomans, Allan, 1871

BACHELORS OF ARTS.

Abbott, George H., 1887
Abbott, Henry Palmer, 1893
Abbott, Thomas K., 1888
Abigail, Eliza L., 1893

§ Admitted *ad eundem gradum*.

Abigail, Ernest Robert, 1896
Alexander, Maud Marion, 1902
Allan, Edith Jeannie, 1895
Allen, Arthur W., 1883 §
Allen, George Boyce, 1877
Allen, Leslie Holdsworth, 1904
Allen, Reginald C., 1879
Amess, William, 1883
Amos, Jeanie Cairns, 1890
Amos, Nellie Margaret, 1902
Anderson, Hugh Miller, 1890
Anderson, Maud Edith, 1896
Anderson, Robert, 1906
Anderson, Virginia, 1904
Anderson, William Addison S., 1892
Andrews, Ernest Clayton, 1894
Anstey, George Webb, 1893
d'Apice, Antoine William M., 1899
Armitage, Charles Horsfall, 1902
Armstrong, Clare Annie Constance, 1905
Armstrong, Helen Daphne Harvey, 1902
Armstrong, Ina Beatrice Harvey, 1901
Armstrong, Isabella, 1895
Armstrong, Laurens F. M., 1884
Armstrong, Margaret Jane, 1897
Armstrong, Tancred de C., 1891
Armstrong, William G., 1884
Arnold, Edwin Charles, 1896
Artlett, Ettie, 1888
Artlett, William Langridge, 1902
Askham, Albert Charles, 1905
Aspinall, Arthur Ashworth, 1889
Atkins, William Leonard, 1893
Auld, John Hay Goodlet, 1897
Austin, Alfred Herbert, 1903
Austin, Fanny May, 1905
Ayres, Charles, 1882
Bailey, Margaret Anne, 1900
Baret, Henri Victor David, 1903
Barker, Henry Auriol, 1881 §
Barker, Thomas Charles, 1886
Barnet, Donald McKay, 1890
Barraclough, Francis Egerton, 1895
Barrow, Isaac Manly, 1905
Barry, Duncan Robertson, 1905
Barry, Hugh de Barri, 1898
Barton, Joanna, 1893
Barton, John a'Beckett D., 1896
Barton, Wilfrid Alexander, 1903
Bathgate, Donald Gordon, 1903
Bavin, Gertrude Lillian, 1898
Bavin, Thos. Rainsford, 1894
Baylis, Harold M., 1883
Beardmore, Ada, 1896
Beardsmore, Emily Maud, 1894
Beardsmore, Robert Henry, 1895
Beaumont, Annie Holloway, 1898
Beckenham, John George, 1904
Beegling, Daniel, 1885
Beehag, Samuel Alfred, 1886
Bellhouse, Constance Annie, 1906
Berne, Percy Witton, 1883
Bertie, Charlotte Maud, 1896
Black, Reginald Austin William, 1896
Blacket, Arthur R., 1872
Blacket, Cuthbert, 1891
Blatchford, Torrington, 1894
Blaxland, Henry Charles, 1897
Bloomfield, Elsie I'Anson, 1897
Bloomfield, William John, 1896
Blumer, Charles, 1894
Bode, Arnold G. H., 1888
Bonamy, Nellie Mildred Blanche, 1899
Bolton, Barbara Marion, 1892
Bonney, Reginald Schofield, 1904
Booth, Mary, 1890
Bourne, Florence Ida, 1906
Bourke, Joseph Ormond Aloysius, 1906
Bowmaker, Jessie, 1901
Bowmaker, Theophilus Robert, 1896
Bowman, Arthur, 1880
Bowman, Ernest M., 1880
Bowman, Alister S., 1878
Boxall, Nelson Leopold, 1896
Boyce, Francis Stewart, 1893
Brearley, Edwin Andrew, 1904
Brennand, Henry John W., 1896
Brentnall, Nina Tillotson, 1903
Brereton, John Le Gay, 1894
Britten, Herbert Edward, 1888
Britton, Theodosia Ada, 1891
Broderick, Cecil Thomas Hawkes, 1896
Brodie, Isabella Esther, 1895
Broinowski, Leopold T., 1897
Brook, Henry James Sidney, 1896
Broome, Edward, 1897

§ Admitted *ad eundem gradum.*

Brown, Alfred, 1866
Brown, George Edward, 1904
Brown, Mary Elizabeth, 1885
Brown, Sophia, 1894
Brown, William Vernon, 1894
Browne, William C., 1864
Brownlie, Elizabeth Alice Dalziel, 1901
Brownlie, Eveline Agnes, 1902
Bruce, Annie, 1901
Bruce, Grace Mitchell, 1901
Bruce, Mary Jane, 1896
Bruce, Mary H., 1887
Buchanan, Charles Arthur, 1889
Buchanan, Charles Pakenham, 1900
Buckland, Thomas, 1878
Bundock, Charles, 1878
Bundock, Francis F., 1877
Bunting, Edith Annie, 1896
Burfitt, Manie Boyd, 1905
Burfitt, Walter F., 1894
Bushnell, Pollie, 1896
Butler, Francis Joseph, 1882
Butler, Patrick James, 1900
Butler, Spencer Joseph St. C., 1893
Butler, Stanley William Beauchamp, 1900
Butler, Thomas, 1876
Byrne, James Kevin, 1894
Byrne, Lily Comyn, 1896
Byrne, William Edmund, 1892
Cadden, Leslie George Barton, 1899
Cahill, Annie Lucille, 1894
Cakebread, William Jowers, 1894
Callaghan, Stanislaus Kostka, 1905
Cameron, Archibald Peter, 1894
Cameron, William Thomas, 1904
Campbell, Alexander Petrie, 1904
Campbell, Allan, 1874
Campbell, Charles Robert, 1893
Campbell, George Polding, 1885
Campbell, John Stuart, 1902
Canaway, Arthur P., 1894§
Candlish, Robert Smith, 1904
Cargill, John Sydney, 1889
Carlile-Thomas, Ella, 1900
Carlisle, William W., 1878
Carlos, Joseph, 1893§
Carey, Daisy, 1904
Caro, Hilda, 1896
Carroll, William John Smyth, 1904
Carruthers, Ada Mary, 1904
Carvosso, Albert B., 1884
Casey, Michael Alphonsus, 1896
Castling, James Robert, 1896
Chapman, Alfred Ernest, 1893
Chisholm, William, 1875
Chrismas, Charles Herbert, 1906
Chubb, Montague Charles Lyttelton, 1896
Clark, Francis George, 1900
Clark, Marjorie Dufaur, 1906
Clarke, Francis William, 1884
Clegg, William Carnegie, 1899
Clines, Peter Joseph, 1896
Clipsham, Gertrude Mary, 1899
Closs, William John Leech, 1890
Clubb, Wallace, 1896
Coen, Francis, 1906
Coffey, Francis Louis Verhulst, 1894
Cohen, Alroy Maitland, 1903
Cole, Louisa, 1898
Coleman, Ernest Albert, 1906
Collier, Frederick William Dean, 1901
Collings, Edith, 1904
Collins, Clifford Malua, 1906
Combes, Jane Frances, 1895
Compton, Albert Zarenne, 1904
Conlon, William Aloysius, 1891
Connellan, John, 1892
Connolly, John, 1894
Connor, Thomas John, 1895
Copland, Frank Fawcett, 1894
Cook, Sydney Leicester, 1898
Cooke, Clarence Hudson, 1892
Coombes, Archie James, 1905
Corbett, William Francis, 1883
Cosh, James, 1891
Cotton, Leo Arthur, 1906
Coutts, Margaret, 1903
Cowan, David, 1894
Cowlishaw, Winifred, 1903
Cox, Harold, 1889
Coyle, William Thomas, 1891
Craig, Alexander Donald, 1893
Craig, Charles, 1892
Crane, Charles, 1882
Cranswick, George Harvard, 1904
Crawford, Stella Maud C., 1896
Creagh, Albert Jasper, 1889

§ Admitted *ad eundem gradum.*

Creagh, William John, 1892
Cripps, Esther Fischer, 1891
Crisford, Hilda Nelsie Moore, 1902
Crowley, Archibald, 1901
Cruise, Emily A., 1897
Cullinane, John Aloysius, 1895
Cumming, Jennie, 1896
Curlewis, Harold Burnham, 1897
Curlewis, Herbert Raine, 1890
Curnow, William Leslie, 1890
Curren, Ethel, 1905
D'Arcy, George Synnott, 1895
D'Arcy, John Synnott, 1890
D'Arcy-Irvine, Malcolm M., 1889
Daley, Frank H., 1889
Dalmas, Lizzie, 1895
Daly, May Edith, 1895
Dash, Ebenezer, 1894
Dargin, Sydney, 1871
Davidson, Colin George Watt, 1899
Davies, Arthur Bernard, 1894
Davies, Isobel, 1906
Davies, Wyndham John E., 1893
Davis, Agnes Marianne Harrison, 1896
Davis, Henry, 1890
Davison, Samuel Beaumont, 1896
Dawes, Madeleine Mabel, 1905
Day, Leo Septimus, 1899
Debenham, Frank, 1906
Debenham, Jessie, 1906
De Lissa, Ethel Naida, 1898
De Lissa, Horace, 1896
Denham, Howard Kynaston, 1903
Dettmann, Herbert Stanley, 1897
Dey, Charlotte Johnston, 1898
Dick, James Adam, 1886
Dick, William Thomas, 1890
Dickinson, Edward Moseley, 1899
Dimond, Margaret Cecilia, 1893
Dixon, Herbert Hutchinson, 1894
Doak, Frank Wiseman, 1891
Docker, Gladys Mary Brougham, 1903
Docker, Wilfred Brougham, 1905
Doig, Alexander John, 1895
Douglas, Robert Johnstone, 1905
Dove, William R. Norton, 1893
Dowe, Philip William, 1893
Dowling, Frank Vincent, 1898
Doyle, John, 1891§
Drummond, Shafto Landour, 1893
Dudley, Joseph T., 1885
Duff, Victor Clark, 1904
Dumolo, Nona, 1898
Dunlop, John W., 1895
Dunlop, Norman John, 1890
Dunne, John D., 1873
Dunnicliff, Mary Clifton, 1898
Durack, Joseph Jerry E., 1899
Eames, Jane, 1895
Ebsworth, Samuel Wilfred, 1905
Edmunds, John Michael, 1892
Edmunds, May, 1897
Edwards, David Sutherland, 1894
Edwards, Edward Evan, 1898
Edwards, John, 1891
Elder, Francis R., 1877
Elkin, Jonathan Bevan, 1895
Elliott, Millicent V., 1895
Ellis, Ethel, 1894
Ellis, Mary, 1894
Elphinstone, Elsie Mary, 1899
Elphinstone, James, 1881
Elphinstone, James Cooke, 1896
Emanuel, Nathaniel, 1867
England, Theophilus, 1885
England, Thomas H., 1885
Enright, Walter John, 1893
Evans, Ada Emily, 1895
Evans, Sara, 1904
Evans-Jones, David Pentland, 1898
Fahey, Bartley Francis, 1901
Feez, Arthur H., 1880
Fell, Catherine Isabella, 1900
Ferguson, David, 1886
Ferguson, John Alexander, 1902
Fidler, Carleton B., 1888
Fidler, Isabel Margaret, 1898
Finn, William George, 1895
Finney, Charlotte, 1895
Finney, Joseph, 1894
Fisher, Arthur Donnelly, 1904
Fitzgerald, Edmund, 1866
Fitzgerald, John Timothy, 1890
Fitzhardinge, Julie Grantley, 1906
Fitzpatrick, Bernard Joseph, 1897
Fitzpatrick, Thomas John A., 1893
Flannery, George Ernest, 1892
Flashman, James Froude, 1892
Flavelle, Lucy Isabel, 1896

§ Admitted *ad eundem gradum.*

Fleming, Howard George T., 1894
Fletcher, Archibald William, 1886
Fletcher, Charles R., 1881
Fletcher, J. A., 1879
Fletcher, Katherine Elizabeth, 1895
Flynn, William J., 1884
Forde, James, 1891
Foreman, Henry James Clifton, 1896
Forster, Charles E., 1876
Forsyth, Walter George, 1898
Fosbery, Vincent F., 1886
Fox, Harold S., 1885
Fox, Millicent, 1905
Fraser, George, 1906
Fraser, Robert W., 1885
Fraser-Hill, Charlotte Elizabeth, 1902
Freeman, Ambrose William, 1896
Fry, Edith May, 1904
Fullerton, Alex. Y., 1885
Futter, Victor Sedley, 1906
Gale, Charles Albert, 1906
Galt, James, 1899
Garnsey, Edward R., 1885
Geddes, Samuel, 1885
George, John, 1893
Gerber, Edward William T., 1892
Giles, John Porter Harris. 1903
Gillies, James, 1889
Goddard, Ernest James, 1904
Goddard, Thomas Herbert, 1904
Gordon, George Acheson, 1895
Gorman, John R., 1866
Gough, Norman John, 1900
Graham, Emily Rebecca, 1903
Graham, Frances, 1905
Grant, William James, 1903
Grassick, Charles C., 1897
Greenlees, Gavin, 1895
Green, Henry Mackenzie, 1902
Greenway, Alfred R., 1870
Gregson, Edward Jesse, 1903
Gregson, William Hilder, 1898
Grieve, Robert Henry, 1900
Griffith, James Shaw, 1895
Griffiths, Frederick Guy, 1898
Grogan, Albert Thomas Henry, 1897
Hadley, Alfred Edward, 1893
Hadley, Charles William, 1899
Haigh, Victor, 1905
Hall, Alfred Ernest, 1893
Hall, Dorothy Vine, 1906
Halliday, George C., 1884
Halloran, Aubrey, 1892
Halloran, George Henry, 1896
Halloran, Ida, 1893
Hammond, John Harold, 1896
Hansard, Edith Hirst, 1897
Hargraves, Edward John, 1859
Harker, Constance Elizabeth, 1895
Harley, Helen Louise, 1903
Harriott, Charles Warre, 1889
Harriott, Georgina Jane, 1894
Harris, George, 1891
Harris, John, 1892
Harris, Lewis Alexander, 1905
Harris, Marian, 1898
Harris, Matthew, 1863
Harris, Reginald Arthur, 1902
Harvey, Revina, 1895
Harvey, William George, 1894
Harwood, Marian Fleming, 1898
Hawken, Roger William H., 1902
Hay, Mary Catherine, 1897
Hayes, David John, 1894
Hedberg, John Alfred, 1896
Heden, Ernest Charles, 1898
Helsham, Charles Howard, 1892
Henderson, George Cockburn, 1893
Henderson, Robert Greenway, 1905
Henderson, Robert Newburn, 1895
Henry, Ada, 1900
Henry, Hugh, 1905
Henry, Ida Emily, 1902
Hertzberg, Marcus, 1906
Hewitt, Thomas Cotgrave, 1904
Higgins, Michael A., 1879
Higgins, Percy Reginald, 1893
Hill, Evelyn M., 1895
Hill, James Henry Fraser, 1900
Hill, John Goodwin Watson, 1901
Hilliard, Arthur Vaughan, 1890
Hinder, Robert John, 1889
Hinton, William Samuel, 1902.
Hipsley, Alice Ellen, 1898
Hobbs, Edwin, 1897
Hobbs, John William, 1894
Hodge, Ernest Arthur, 1895
Hodge, Sydney Trevillian, 1902
Hodgkins, Amy Alice, 1895
Hogg, Kate Emily, 1894
Holden, Florence Mackenzie, 1906
Holliday, Andrew, 1898
Hollingdale, Bernard Austin, 1906

Holloway, Eirene Anna, 1904
Holme, Ernest Rudolph, 1891
Holme, John Barton, 1893
Holmes, William Frederick, 1894
Holt, Arthur Christian, 1895
Holt, Edith Jane Catherine, 1902
Hood, Dannina, 1894
Hope, Percival, 1903
Hopkins, Francis Irvine, 1893
Hopman, John Henry, 1894
Horniman, Alexander, 1866
Houison, Andrew, 1869
Houison, James, 1863
Houison, Stephen James, 1898
Howard, John Bruton, 1895
Huggart, Alfred Theodore, 1892
Huggart, William Charles, 1898
Hughes, Charles Michael, 1886
Hughes, Hugh Jason, 1897
Hughes, James O'Donoghue A., 1894
Hughes, John, 1906
Hughes, Michael O'Gorman, 1890
Hungerford, Hedley Heber, 1886
Hunt, Digby St. Clair W., 1895
Hunt, Hugh Alton Stanislaus, 1897
Hunter, Mary Alison Miles, 1895
Hunter, Thomas Brown, 1898
Hutchison, George Thomas, 1900
Hynes, Sarah, 1891
Jackson, Frederick Charles, 1897
Jacobs, James, 1894
James, Arthur Henry, 1893
James, Augustus G. F., 1888
James, George Alfred, 1893
James, Thomas, 1896
Jamieson, George Wellington, 1893
Jamieson, Sydney, 1884
Jaques, Harold Vivian, 1904
Jarrett, Marjorie Kate, 1901
Jarvie, Bennie, 1898
Jenkins, Charles J., 1887
Johnson, Martin Luther, 1893
Johnston, Ella Russell, 1895
Johnston, John, 1887
Johnston, Mary Eleanor, 1896
Johnston, Stephen Jason, 1894
Johnston, Thomas Harvey, 1905
Johnstone, Henry Thomas, 1885
Jones, Eric David Lloyd, 1906
Jones, Thomas, 1895
Jones, Thomas E., 1884
Jones, Ernest Trevor, 1884
Jones, Evan John, 1894
Jordan, Frederick Richard, 1904
Joseph, Horace B., 1887
Kelynack, Arthur James, 1889
Kaeppel, Andrée Adelaide, 1906
Kelynack, Harold Leslie, 1893
Kemmis, William Henry, 1890
Kemp, Laura Mildred King, 1902
Kemp, Richard Cyril King, 1903
Kendall, Frank Louis, 1893
Kendall, Theodore M., 1876
Kenna, Patrick, 1882
Kennedy, Annie Augusta, 1893
Kennedy, Emily Clara, 1895
Kershaw, Joseph Cuthbert, 1894
Kidston, Robert Matthew, 1892
Kilgour, Alexander James, 1894
King, George C., 1887
King, R. W., 1884§
Kinross, John, 1869
Kinross, Robert Menzies, 1889
Klein, James Augustus, 1897
Knight, Arthur, 1894
La Douce, Felicie Aurélie, 1905
Lafferty, Terence Matthew, 1899
Lamrock, Arthur Stanton, 1891
Lane, Frederick George, 1895
Langley, Isabella Edwardes, 1897
Langton, Frederick W., 1887
Larcombe, Ernest Richard, 1902
Larkins, Frank Joseph Moore, 1902
Latreille, Meta Gertrude Emily, 1905
Layton, John Edward, 1893
Leahy, John Patrick Daunt, 1890
Lee, Herbert Ernest, 1886
Lee, Thomas Nelson, 1899
Leeson, Ida Emily, 1906
Leibius, G. Hugo, 1888
Lennox, Edith, 1906
Lenthall, Ellen Melicent, 1893
de Lepervanche, Eustace Mèzières, 1900
Leverrier, Frank, 1884
Levick, Alfred Manning, 1904
Levy, Daniel, 1893
Lewis, Henry Clyde, 1893
Lichtscheindl, Rosa, 1894

§ Admitted *ad eundem gradum.*

Liggins, Jessie Hunsdon, 1899
Lindsay, William Carlow, 1903
Linsley, William H, 1880
Little, Vivian Agincourt Spence, 1903
Littlejohn, Edward S., 1887
Lloyd, Thomas, 1878
Logan, George, 1903
Lord, Frank Colbran Turner, 1903
Loudon, Bertha Winifred, 1904
Lovell, Henry Tasman, 1906
Loxton, Frederick Ewen, 1906
Lowick, Clara Warne, 1904
Lusby, Sydney Gordon, 1906
Lydon, James, 1894
Lynch, Michael D., 1870
Lynch, William, 1863
Lyon, Pearson, 1890
Lyons, Ettie, 1904
Lyons, Richard Jenkins, 1906
MacCallum, Isabella Renton, 1904
MacCallum, Mungo Lorenz, 1906
Macansh, Andrew W., 1885
MacCarthy, Herbert T. S., 1860
McCarthy, Arthur W., 1881
McCook, Adam Stuart, 1895
McCook, William Henry, 1900
McCoy, William Taylor, 1894
McCulloch, Percy V., 1881
McDermott, Vesian B., 1887
McDonagh, John M., 1879
MacDonald, Fannie Elizabeth, 1895
McDonald, Timothy George, 1903
McDonnell, Randal C. W., 1888
McEvilly, Augustus, 1886
McEvilly, Ulric, 1883
McEvoy, Bertie Patrick, 1899
MacFarlane, Laurie Moreton, 1906
McGlynn, Rebecca Mary, 1898
McGuinn, Denis, 1884
MacInnes, Angus, 1901
MacInnes, Isabel Mary, 1904
McIntosh, Alexander Menzies, 1906
McIntosh, Harold, 1889
McIntyre, Aug. T., 1879
McIntyre, Duncan A., 1888
Mack, Sidney, 1890
McKay, James, 1896
Mackay, Ivén Giffard, 1904
McKie, Ernest Norman, 1906
Mackintosh, Bertha Adeline Hilda, 1899
Mackness, Constance, 1902
McLaren, John Gilbert, 1895
McLaughlin, Daniel, 1890
MacLaurin, Henry Normand, 1899
McLean, Archie Lang, 1906
Maclean, Charles Hector Roderick, 1901
MacLean, Frederick S., 1887
McLelland, Hugh, 1881
McLeod, James, 1879
McLintock, William Colin Scott, 1900
McMahon, Gregan, 1896
MacManamey, James Frazer, 1881
MacManamey, John Frazer, 1889
MacManamey, William Frazer, 1892
MacMaster, Donald Æneas D., 1894
McNeil, Andrew, 1889
McNevin, Arthur Joseph, 1895
McNevin, Thomas Butler, 1893
MacPherson, Peter, 1889
McWilliam, Neville Gilbert, 1903
Macrossan, Hugh Denis, 1902
Maffey, Reginald William H., 1896
Maher, Charles H., 1877
Maher, Matthew E., 1867
Maher, Thomas Francis, 1893
Main, John, 1892
Makin, William, 1902
Maloney, Andrew William, 1893
Maloney, John Thomas, 1899
Mannell, Francis Worthington, 1892
Manning, Henry Edward, 1900
Manning, Hugh Eldred, 1905
Manning, Reginald K., 1887
Manning, William Ernest, 1892
Markell, Horace Francis, 1905
Marks, Hyam, 1892
Marks, Percy J., 1887
Marks, Florence, 1893
Marks, Leah, 1893
Marr, Fannie Augusta, 1899
Martin, Lewis Ormsby, 1893
Martyn, Sydney Charles, 1889
Massey-Makinson, Arthur, 1903
Massie, Richard de Winton, 1886
Mate, William H., 1864
Mathews, Hamilton Bartlett, 1899
Mathison, Walter, 1880
Maughan, David, 1906§
Maxted, Henry Louis, 1902
Maxwell, Henry Francis, 1895
Maxwell, William, 1904

§ Admitted *ad eundem gradum*.

Maynard, Ethel Margaret, 1894
Mayne, J. O'Neill, 1884
Maze, William Archibald A., 1892
Meagher, Louis Felix, 1889
Meares, Hercules, 1893
Meek, Herbert Arthur, 1903
Meillon, Joseph, 1863
Mell, Cecil Newton, 1894
Melville, Hector Pope, 1905
Merewether, Edward A. M., 1884
Merewether, Hugh H. M., 1894
Merewether, William D. M., 1895
Middleton, Robert John, 1906
Miles, James Albert, 1894
Miller, James W., 1896
Millard, Alfred Charles, 1885
Miller, Richard J., 1885
Mills, Percy Harcourt, 1893
Mitchell, Ernest Meyer, 1896
Mitchell, Ethel Robertson, 1898
Molineaux, Amy Atherton, 1891
Moloney, Thomas Patrick, 1885
Molster, Eliza, 1897
Monahan, William Willis, 1897
Montefiore, Hortense Henriette, 1896
Montgomerie, John, 1889
Moore, David C., 1883
Moore, Frank Joseph Sarsfield, 1883
Moore, John, 1883
Moore, Verner, 1884
Moore, Walter Albert, 1894
Morgan, Frederick A., 1888
Morgan, Thomas H. D., 1892
Morley, Irene Madeline, 1904
Morrice, John, 1874
Morris, John James, 1895
Morris, Robert N., 1870
Morrish, Francis, 1882
Mote, Arnold Rudolph, 1902
Mott, Olive Lenore, 1905
Mottershead, Arthur, 1906
Moulton, James Egan, 1892
Moustaka, Orea Emma Hellas, 1897
Mowbray, Rupert Wallace, 1903
Moylan, William Patrick, 1906
Mugliston, Madeleine Lucy, 1904
Mulholland, John Joseph, 1899
Mullens, Arthur Frank Macquarie, 1896
Munro, William J., 1880
Murray, Charles O'Connor, 1904
Murray, Mercy M. H., 1897
Murray-Prior, Dorothea Katherine, 1904
Murray-Prior, Robert Sterling, 1905
Murray-Prior, Ruth Angela, 1906
Mussmann, Carl Ernst Gottlieb, 1897
Mutton, Isaiah, 1900
Myers, David M., 1866
Nelson, Duncan John, 1895
Nettleship, Edward, 1895
Newman, George Hine, 1887
Newman, Kelsey Illidge, 1894
Newsham, Alice Isabel, 1900
Newton, Henry, 1889
Newton, Roland George, 1906
Nicholls, William Hunt Ward, 1891
Nicholson, George Gibb, 1899
Noake, Arthur Raynor, 1906
Noake, Reginald, 1877
Noake, Stephen Charles, 1906
Noake, Reginald Robert, 1904
Noakes, Mabel Alicia, 1896
Northcott, Clarence Hunter, 1905
Oakes, Florence Isabelle Mantell, 1905
O'Brien, Agnes Gertrude, 1895
O'Brien, Kathleen Moira, 1894
O'Brien, Lucius, 1865
O'Brien, Ormond, 1876
O'Brien, Patrick Daniel, 1894
O'Conor, Broughton B., 1892
O'Donohue, John P. Markham, 1895
O'Keefe, John A., 1887
O'Neill, James Bernard, 1895
O'Reilly, Hubert de Burgh, 1892
O'Reilly, Walter Creswell, 1903
Osborne, Henry Stuart, 1896
O'Sullivan, Daniel Roche, 1901
O'Sullivan, Eugene Francis, 1901
Oswald, Alfred William, 1903
Page, Arthur Ernest, 1899
Pain, Allan Franklyn, 1894
Pain, A. W., 1884 §
Paine, Bennington Haille, 1893
Paine, George Henry, 1894
Palmer, Selina Elizabeth, 1901
Paris, Jane Elizabeth, 1897
Parker, William Arthur, 1892
Parsons, Emily Waugh, 1899

§ Admitted *ad eundem gradum.*

Parsons, Florence Louey, 1906
Paterson, John, 1905
Paton, Arthur T., 1887
Paton, Mary Paterson, 1902
Pattinson, Anthony Walton, 1894
Paul, Alfred, 1905
Peden, John Beverley, 1892
Penman, John Edwards Foggon, 1897
Penman, Leslie Ethelbert, 1906
Perkins, Joseph Abraham R., 1892
Perské, Hermann, 1887
Petrie, Edith Maud, 1901
Phillips, Catherine Agnes, 1896
Phillips, Frederick George, 1902
Phillips, Reginald Bede, 1902
Pickburn, James Prosper, 1892
Piddington, Albert Bathurst, 1883
Pilcher, Charles E., 1865
Pilcher, George de Vial, 1859
Pilcher, Norman George Stafford, 1898
Pincombe, Torrington Hawke, 1890
Pitt, Arthur Gladstone Matcham, 1902
Poidevin, Leslie Oswald Sheridan, 1900
Poolman, Arthur Edward, 1883
Pope, Roland James, 1885
Portus, Garnet Vere, 1906
Potts, Cuthbert, 1898
Power, Percy Horne, 1901
Powell, James William Garnet, 1904
Pratt, Walter Henry, 1901
Prentice, Arthur James, 1892
Pritchard, Alice, 1895
Pritchard, William C., 1888
Purcell, Philip Francis, 1898
Purcell, Winifred Dalton, 1895
Purser, Cecil, 1885
Quaife, William F., 1879
Quigley, James, 1890
Quinn, John Joseph, 1905
Ramsay, James, 1885
Raves, George Alfred, 1897
Raves, Helen Alice, 1894
Redshaw, George, 1895
Read, Elizabeth Jane, 1899
Real, Edward Thynne, 1905
Redgrave, Harold Wilfrid, 1906
Redgrave, Leslie Alfred, 1905
Reid, Roberta Jane Sinclair, 1904
Reid, Violet Margaret, 1902
Reidy, John James Gralton, 1896
Rennie, George Edward, 1882
Renwick, Arthur, 1857
Renwick, Herbert John, 1893
Reynolds, Arthur J. P. G., 1890
Rhodes, Alice Olivia Raybould, 1906
Richardson, Charles Noel D., 1893
Richardson, Henry A., 1867
Riley, Patrick William, 1894
Riley, Spencer George Birkenhead, 1897
Riley, Valentine B., 1872
Roberts, Thomas Taylor, 1903
Robinson, Charles H. P., 1893
Robinson, George Frederick G., 1890
Robinson, Mabel Fuller, 1890
Robjohns, Leonard, 1894
Robson, Reginald Norman, 1900
Robson, William Elliott V., 1889
Rofe, Ruth Irene, 1904
Roger, Robert, 1876
Rogers, Percival Halse, 1905
Rooney, William James, 1892
Roseby, Gertrude Amy, 1895
Roseby, Minnie, 1895
Roseby, Sarah Mabel, 1900
Rossiter, Florence Annie, 1898
Roth-Schmidt, Frederica, 1897
Roughton, Gladys Muriel, 1906
Rourke, Ernest John, 1893
Rourke, George Augustus, 1893
Rourke, Lillie Agnes, 1895
Rowland, Norman de Horne, 1895
Rudder, Sydney Llewellyn, 1891
Russell, Charles Townsend, 1891
Russell, Ethel Albinia, 1893
Russell, Harry Ambrose, 1887
Russell, Henry Chamberlaine, 1859
Russell, Lillian, 1891
Rutherford, Constance Muriel, 1903
Rutherford, Florence Marion, 1900
Rutherford, Geo. Washington, 1900
Rutledge, William F., 1871
Ryan, Gerald, 1893
Ryan, James William, 1901
Rygate, Charles D. H., 1883
Rygate, Henry Bertram, 1885
Saddington, Arthur G., 1887
Sadler, Alexander, 1900
Salting, George, 1857
Sandford, Blanche Vavasour, 1902
Sands, John Marshall, 1889

Saunders, Arthur, 1893
Saunders, Eva Florence, 1897
Saunders, Florence Louisa, 1903
Saxby, George Campbell, 1891
Saywell, Thomas Stanley, 1900
Scarvell, Edric Sydney, 1893
Schrader, Cyril Petersen, 1904
Scoular, David, 1895
Scrutton, Caroline Maude, 1900
Seaward, William T., 1892
Seldon, Florence Mary, 1894
Sellors, Rich. Pickering, 1890
Sendall, Alfred E., 1888
Serisier, Lavigne Ernest, 1891
Shand, Alexr. B., 1884
Sharp, Walter Alex. Ramsay, 1897
Sharpe, Ernest, 1865
Sharpe, George Frederick, 1903
Sharpe, William George, 1897
Shaw, John A. K., 1885
Sheridan, Francis B., 1874
Sheridan, John Patrick, 1890
Sheridan, Muriel Eulalie Bingham, 1900
Sheppard, Edmund Haslewood, 1882
Sheppard, George, 1873
Sherlock, John Bolt, 1895
Shewcroft, Alfred John, 1893
Shortland, Percy Douglass, 1906
Sinclair, Colin Archibald, 1899
Skillen, Elizabeth, 1904
Skillman, Jessie, 1905
Slack, Ella Mary, 1905
Slade, Oswald Carey, 1903
Sloman, Charles Wansbrough, 1893
Sloman, John, 1872
Smee, Reginald, 1901
Smith, Archibald, 1889
Smith, Emma Isabel, 1893
Smith, Nellie May, 1906
Smith, Norman, 1894
Smith, Stanley Clifton, 1906
Smith, William, 1902
Somerville, George B., 1882
Sparling, Lilian Grace, 1906
Spence, John, 1904
Sproule, Margaret, 1903
Squire, Hilton Bell, 1893
Stacy, Fitzroy Somerset, 1897
Stephen, Edward Milner, 1891
Stephen, Henry Montagu, 1900
Stephen, John William Farish, 1897
Stephenson, Anita Leila, 1901
Stevenson, Wm. Henry Webster, 1903
Stewart, Donald Grant, 1896
Stewart, James Robert, 1903
Stoney, Edmund Haighton, 1933
Stonham, Kathleen, 1895
Street, Charles James, 1894
Street, Philip Whistler, 1883
Studds, Harold Augustus, 1900
Studdy, Albert John, 1888
Studdy, Annie Avice Matilda, 1891
Sullivan, Denis Joseph, 1899
Sullivan, Henry, 1872
Sullivan, James, 1867
Sullivan, James, 1894
Sullivan, Reginald, 1892
Sutherland, Elmina Louise, 1891
Sutherland, Peter, 1890
Sutton, Mabel Harriett, 1904
Swanwick, Kenneth ffoulkes, 1896
Swynny, William Frank, 1899
Symonds, Bertha Violet, 1897
Symonds, Daisy, 1893
Tange, Charles L., 1880
Tarplee, William F., 1884
Taylor, Sarah, 1893
Taylor, Thomas Manning, 1901
Tebbutt, Arthur Hamilton, 1905
Terry, Frank, 1906
Thallon, James B., 1876
Thomas, Richard Weld, 1893
Thompson, Alexander, 1895
Thompson, Robert Alfred, 1891
Thompson, Sydney A., 1887
Thomson, Alec, 1891
Thorburn, James Thos., 1886
Thorne, George, 1865
Thornton, Septimus, 1896
Tighe, William, 1892
Tivey, John Proctor, 1902
Todd, Frederick Augustus, 1901
Tole, Joseph, 1868
Tom, Wesley, 1860
Tomlinson, George Leigh, 1905
Townley, Percy L., 1886
Townsend, Samuel Edward, 1905
Tozer, Seymour Darvall, 1899
Tremlett, Frank Cecil Glazebrook, 1906
Trindall, Richard B., 1885
Turner, Annie Elizabeth, 1899
Uther, Allan Hammill, 1891

Uther, Jennie Bertha, 1894
Veech, Louis Stanislaus, 1890
Verge, John, 1899
Vickery, Ebenezer Frank, 1901
Waddell, Annie, 1895
Waddy, Ernest Frederick, 1905
Waddy, Percival Richard, 1891
Wade, Charles Gregory, 1905§
Wade, Robert Thompson, 1905
Waldron, Thomas W. King, 1893
Walker, Arthur Dight, 1906
Walker, Clifton Claude Parton, 1906
Walker, James Ernest, 1894
Walker, Samuel Herbert, 1894
Walker, William A., 1888
Wallace, Frank Ernest, 1889
Walsh, John James, 1899
Walton, Geo. Henry Montague, 1899
Ward, Leonard Keith, 1900
Ward, Ruby Estelle, 1897
Ward, Thomas W. C., 1884
Wardrop, Gabriel, 1893
Wardrop, Maggie Robertson, 1903
Waring, Herbert Raymond, 1906
Warren, Ernest William, 1898
Waterhouse, Eben Gowrie, 1903
Watson, Herbert Frazer, 1903
Watson, Maria Eleanor, 1906
Watson, Robert S., 1887
Watt, Andrew Robert James, 1893
Watt, Charles Prosper, 1893
Watt, Thomas Evans, 1906
Watts, Percy Richard, 1904
Wearne, Amy Isabel, 1893
Wearne, Richard Arthur, 1895
Webb, Bernard Linden, 1906
Weigall, Harold Walter, 1895
Wellisch, William Montague, 1903
West, Edith Annie, 1900
Wheeler, Arthur Russell, 1904
Wheeler, Harold Charles Fearon, 1902
White, Charles Alfred, 1895
Whitfeld, Eleanor Madeline, 1895
Whitfeld, Hubert Edwin, 1897
Whiting, Joseph, 1895
Whitney, George Charles, 1906
Wilkinson, Henry L., 1880
Wilkinson, Ida Beatrice, 1903
Wilkinson, W. Camac, 1878
Williams, Alfred James, 1898
Williams, James Leslie, 1892
Williams, John Alfred, 1894
Williams, Leslie Ballesat, 1899
Williams, William, 1891
Williams, William, 1895
Williams, William Henry, 1894
Williamson, Mark A., 1879
Williamson, Percy Leyden, 1899
Wilson, Frederick James, 1893
Wilson, George Harry, 1901
Wilson, Gwendolene Lilian, 1900
Wilson, Roger, 1877
Wilton, Edward Nowill, 1900
Windeyer, Richard, 1891
Windeyer, William Archibald, 1893
Wise, Bernhard R., 1885§
Withycombe, Ernest John, 1899
Wolstenholme, Harry, 1890
Wood, Frederick Ernest, 1890
Wood, Frederick William, 1894
Wood, Harrie Dalrymple, 1893
Woodd, Henry A., 1887
Woodward, Frederick P., 1892
Woolcock, John L., 1883
Wootton, Ernest, 1892
Wright, Stewart, 1882
Yarnold, Isabel May, 1899
Yates, Malcolm Edwin, 1905
Young, James, 1900

DOCTORS OF LAW.

His Royal Highness the Prince of Wales, 1901§
Barry, Alfred, 1884§
Coghlan, Charles A., 1885
Cullen, William P., 1887
Donovan, John J., 1867
Green, Arthur V., 1887
Jefferis, James, 1885
Manning, J. Napoleon, 1892
Marden, John, 1890
Morris, Robert Newton, 1886
Roseby, Thomas, 1873
Sly, George J., 1878
Sly, Joseph D., 1873
Sly, Richard M., 1877
Waddell, George Washington, 1903
White, W. Moore, 1882§

§Admitted *ad eundem gradum.*

BACHELORS OF LAW.

Abigail, Ernest Robert, 1899
d'Apice, Antoine William M., 1904
Armstrong, Laurens F. M., 1890
Arnold, Austin Guerry de Lauret, 1903
Barraclough, Francis Egerton, 1899
Bathgate, Donald Gordon, 1906
Bavin, Thomas Rainsford, 1897
Bloomfield, William John, 1899
Boyce, Francis Stewart, 1896
Breckenridge, Charles Campbell Poole, 1906
Brierley, Frank Nunan, 1897
Broderick, Cecil Thomas Hawkes, 1902
Brown, George Edward, 1906
Browne, Joseph Alexander, 1904
Butler, Spencer Joseph St. Clair, 1896
Chapman, Alfred Ernest, 1903
Clark, Francis George, 1902
Clegg, William Carnegie, 1901
Clines, Peter Joseph, 1898
Coffey, Francis Louis Verhulst, 1896
Cohen, Alroy Maitland, 1905
Craig, Charles, 1900
Creagh, William John, 1897
Cullinane, John Aloysius, 1897
Curlewis, Herbert Raine, 1892
Curtis, William John, 1904
Davidson, Colin George Watt, 1901
Davies, Arthur Bernard, 1897
Davies, Wyndham John E., 1895
Denham. Howard Kynaston, 1906
Edmunds, Walter, 1881
Edwards, David Sutherland, 1899
Elphinstone, James Cooke, 1898
Evans, Ada Emily, 1902
Evans-Jones, David Pentland, 1904
Fahey, Bartley Francis, 1904
Ferguson, John Alexander, 1905
Flannery, George Ernest, 1894
Forsyth, Walter George, 1900
Gerber, Edward W. T., 1894
Gill, Alfred Chalmers, 1895
Green, Henry Mackenzie, 1905
Halloran, Aubrey, 1894
Hammond, John Harold, 1898
Harris, George, 1893
Higgins, Percy Reginald, 1895
Hinton, William Samuel, 1904
Hodge, Sydney Trevillian, 1905
Holliday, Andrew, 1903
Holme, John Barton, 1895
Jaques, Harold Vivian, 1906
Jones, Albert E., 1889§
Kelynack, Arthur James, 1892
Kemp, Richard Cyril King, 1905
Kershaw, Joseph Cuthbert, 1896
Kilgour, Alexander James, 1904
Knox, Adrian, 1895§
Larkins, Frank Joseph Moore, 1906
Legge, James Gordon, 1890
Lehane, Thomas Joseph, 1903
Levy, Daniel, 1895
Lindsay, William Carlaw, 1905
Mack, Sidney, 1892
McLaren, Alexander Duncan, 1903
McWilliam, Neville Gilbert, 1906
Manning, Henry Edward, 1902
Martin, Lewis Ormsby, 1895
Meares, Hercules, 1894
Meillon, John, 1892
Merewether, Hugh Hamilton Mitchell, 1898
Merewether, William David Mitchell, 1898
Mills, Percy Harcourt, 1897
Mitchell, Ernest Meyer, 1900
Monahan, William Willis, 1900
Murray, Charles O'Connor, 1906
Nathan, Edward Alleyne, 1891
O'Brien, Patrick Daniel, 1897
O'Conor, Broughton B., 1895
O'Donohue, John P. Markham, 1902
O'Reilly, Hubert de Burgh, 1894
Parker, William Arthur, 1898
Peden, John Beverley, 1898
Pickburn, James Prosper, 1894
Pilcher, Norman George Stafford, 1901
Pitt, Arthur Gladstone M., 1904
Quick, John, 1881§
Richardson, Charles Noel Derwent, 1900
Robson, Reginald Norman, 1903
Rogers, Francis E., 1867
Rogers, William Arnott Halse, 1903

§ Admitted *ad eundem gradum.*

Rowland, Norman de Horne, 1906
Rutherford, George Washington, 1902
Saywell, Thomas Stanley, 1902
Scarvell, Edric Sydney, 1896
Scoular, David, 1899
Sinclair, Colin Archibald, 1905
Slade, Oswald Carey, 1905
Stacy, Fitzroy Somerset, 1901
Stephen, Henry Montagu, 1903
Sullivan, Reginald, 1900
Swanwick, Kenneth ffoulkes, 1905
Taylor, John Michael, 1893
Teece, Richard Clive, 1903
Teece, Roy Noel, 1906
Thompson, Joseph, 1869
Thomson, Alec, 1894
Tighe, William, 1894
Tole, Joseph, 1869
Tozer, Seymour Darvall, 1901
Uther, Allan Hammill, 1893
Varley, Charles Grant, 1902§
Veech, Louis Stanislaus, 1893
Vickery, Ebenezer Frank, 1904
Waddy, Percival Richard, 1893
Waldron, Thomas W. King, 1895
Wallace, Frank Ernest, 1899
Walker, James Ernest, 1896
Walton, George Henry Montague, 1902
Warren, Ernest William, 1900
Watson, Herbert Frazer, 1905
Watt, Andrew R. J., 1894
Wilson, David, 1906
Wilson, George Harry, 1904
Wood, Harrie Dalrymple, 1896
Yarrington, W. H. H., 1887
Young, James, 1902

DOCTORS OF MEDICINE.

Bennet, Francis Alexander, 1896§
Barret, James, 1873
Belgrave, T. B., 1882§
Blackburn, Charles Bickerton, 1903
Blair, John, 1877
Chisholm, William, 1887§
Cleland, John Burton, 1902
Corlette, Cyril Ernest, 1895
Davis, James Shedden, 1905
Flashman, James Froude, 1897
Gillies, Sinclair, M.D.§
Hall, Edwin Cuthbert, 1904
Houison, James, 1870
Jenkins, Edward Johnstone, 1886§
Jones, Richard T., 1874
Knaggs, Samuel T., 1882§
Lloyd, Frederick, 1872
Lyden, Michael John, 1892§
McDonnell, Æneas J., 1896
McMurray, Wahab, 1892§
Magarey, Frank William Ashley, 1903
Maher, W. Odillo, 1884§
Moore, George, 1872
Morton, Selby, 1877
Mullins, George Lane, 1890§
Munro, William John, 1901§
Nash, John Brady, 1903§
Oram, Arthur Murray, 1882§
O'Reilly, Walter William J., 1882§
Ross, Chisholm, 1886
Rowan, Thomas, 1882
Sandes, Francis Percival, 1903
Smith, Grafton Elliott, 1895
Stacy, Harold Skipton, 1901
Stewart, Charles, 1872
Stuart, T. P. Anderson, 1889§
Taylor, Charles, 1872
Wade, Robert Blakeway, 1904
Warren, William Edward, 1882§
Wilson, Thomas George, 1904
Worrall, Ralph, 1888§

BACHELORS OF MEDICINE.

Abbott, George Henry, 1891
Adams, Francis Charles, 1904
Affleck, Ada C., 1898
Aiken, Percy Norman, 1903
Ambrose, Theodore, 1902
Anderson, Arthur, 1902
Anderson, Hugh Miller, 1902
Andrews, William, 1887§
Armstrong, William G., 1888
Aspinall, Archibald John, 1906
Aspinall, Jessie Strahorn, 1906
Bancroft, Peter, 1888
Barling, James Eric Vernon, 1900
Barnes, Edmund Horatio, 1897

§ Admitted *ad eundem gradum.*

Barton, John à Beckett Darvall, 1901
Bell, George, 1906
Bell, Henry Charles Rikard, 1904
Benjafield, Vivian, 1904
Bennetts, Harold Graves, 1896
Biffin, Harriett Eliza, 1898
Binney, Constance Clarice, 1906
Binney, Edward Harold, 1893
Blaney, Henry Patrick, 1903
Bligh, Erasmus A. R., 1905
Blue, Archibald Irwin, 1901
Böhrsmann, Gustav Hall, 1898
Böhrsmann, Rudolph Hermann, 1894
Boelke, Paul, 1893
Bond, Lionel Wilfred, 1904
Bourne, Eleanor Elizabeth, 1903
Bowker, Cedric Victor, 1898
Brade, Gerald Francis, 1899
Brennand, H. John Wolverton, 1899
Broadbent, Percy Lewis, 1902
Broinowski, Gracius Herbert, 1897
Browne, Claude Seccombe, 1904
Buchanan, George Arthur, 1904
Buchanan, Joseph David, 1905
Burfitt, Walter Fitzmaurice, 1900
Burge, Stephen Bruce, 1900
Burkitt, Edmund Henry, 1896
Busby, Hugh, 1900
Cahill, John Hampton, 1903
Cameron, Donald Allan, 1900
Cargill, William Duthie, 1899
Carlile-Thomas, Julia, 1898
Challands, Frederick, 1892
Chenhall, William Thomas, 1897§
Chisholm, Edwin Claude, 1904
Clarke, Gother Robert Carlisle, 1902
Clarke, Philip Sylvester, 1903
Clifford, James Percy, 1906
Clouston, Thomas Bennett, 1905
Coen, Joseph, 1905
Coghlan, Iza Frances Josephine, 1893
Combes, Edgar William Anthony, 1902
Conlon, William Aloysius, 1896
Connolly, Thomas Patrick, 1904
Conroy, Lionel Bigoe Henzell, 1903
Cooley, Percy Glover, 1898
Cope, Hubert Roger, 1898
Corbin, Albert George, 1900
Corfe, Anstruther John, 1903
Cosh, John Inglis Clark, 1897
Cowlishaw, Leslie, 1906
Cox, Frederick Henry, 1895
Cox, Harrie, 1900
Craig, Robert Gordon, 1894
Crawley, Aubrey Joseph C., 1896
Culpin, Ernest, 1905
Dansey, St. John Warburton, 1903
D'Arcy, Constance Elizabeth, 1904
Davies, Reginald Laidlaw, 1901
Davidson, Leslie G., 1888
Day, Edward James, 1906
Deck, George Henry Baring, 1896
Deck, John Northcote, 1900
Delohery, Henry Charles, 1899
Dey, Robert, 1898
Dick, Robert, 1892
Dight, William Billingsley, 1902
Dixon, Graham Patrick, 1897
Donovan, Harrie Caresfort Edmond, 1906
Doyle, William Oscar, 1906
Dunlop, Norman John, 1896
Durack, William Joseph, 1900
Eichler, Wm. Otto Heldmuth, 1900
Ellis, Lawrence Edward, 1898
Elworthy, William Henry, 1903
Fairfax, Edward Wilfred, 1899
Farrell, Robert Meredith, 1897
Finckh, Alfred Edmund, 1905
Finselbach, Friedrich William August, 1906
Fitzpatrick, Edward Bede Lucien, 1903
Flashman, Charles Ernest, 1903
Flecker, Oscar Sydney, 1902
Fordyce, Henry St. Clair, 1895
Forster, Redmond Clarence Hall, 1901
Fox, Hedley Ebenezer, 1903
Freshney, Reginald, 1892
Garde, Henry Lee, 1901
Gibson, Duncan David, 1906
Godsall, Robert Spencer, 1904
Goergs, Karl Randolph Wilhelm, 1905
Goldsmid, Albert, 1895
Graham, James, 1886§
Graham, Mabel Jessie, 1900

§ Admitted *ad eundem gradum.*

Grant, William, 1905§
Green, Terence Albert, 1893
Greenham, Eleanor Constance, 1901
Grey, William Charles, 1903
Griffiths, Frederick Guy, 1900
Griffiths, John Neville, 1905
Gullett, Lucy Edith, 1900
Halcombe, Charles Digby, 1902
Hall, George Reginald Percy, 1895
Halliday, John Charles W., 1896
Handcock, Charles Lancelot, 1894
Hardman, Robert, 1900
Harper, Margaret Hilda, 1906
Harris, John Solomon, 1906
Harris, Samuel Henry, 1906
Harris, Walter Eli, 1900
Harris, Lawrence Herschell Levi, 1896
Harris, William Henry, 1897
Harrison, Edgar Selwyn, 1906
Hart, Basil Lloyd, 1900
Heggaton, Rupert Dufty, 1900
Henry, Arthur, 1889
Henry, Arthur G., 1888
Higgins, Frederick Charles, 1897
Hill, John Goodwin Watson, 1906
Hinder, Henry V. C., 1889
Hipsley, Percy Leslie, 1903
Holland, John Joseph, 1905
Holmes, Harry Glennie, 1900
Holt, Arthur Christian, 1901
Horton, William Henry, 1902
Huggart, William Charles, 1906
Hughes, Michael O'Gorman, 1895
Humphery, Esca Morris, 1903
Hunt, Claude Leopold W., 1891
Hunter, William Allen, 1902
Jackson, John William, 1895
Jones, Lincoln, 1905
Jones, Philip Sydney, 1900
Johnston, Langloh Parker, 1906
Kater, Norman William, 1898
Kay, Stuart, 1905
Kelly, Patrick J., 1889
Kendall, Herbert William, 1905
King, Aubrey Arthur, 1900
Kinross, Robert Menzies, 1894
Lancaster, Llewellyn Bentley, 1896
Langton, William Digan, 1903
Latham, Oliver, 1903
Lawes, Charles H. E., 1892
Leahy, John P. D., 1892
Lee, Henry Herbert, 1901
Lees, Geoffrey John, 1900
Leslie, James Robert, 1905
Lethbridge, Harold Octavius, 1904
Lightoller, George Henry Standish, 1906
Lipscomb, Thomas Walter, 1898
Litchfield, William Frederick, 1893
Lister, Henry, 1892
Llewellyn, Rees Frank, 1902
Ludowici, Edward, 1899
Luker, Donald, 1894
McClelland, Walter Cecil, 1896
MacCreadie, John Laing Martin, 1894
McCredie, Robert William, 1901
MacCulloch, Harrington Thomas Cuthbert, 1906
McDowall, St. Andrew William Logan, 1905
McDowall, Valentine, 1905
McEncroe, James Michael, 1905
McEvoy, John Joseph Stuart, 1900
Macintosh, Alexander Hay, 1901
McKay, William John S., 1891
McKelvey, John Lawrence, 1905
Mackenzie, John, 1899
McKillop, Archibald, 1906
Mackinnon, Roger Robert S., 1894
McLean, George, 1900
MacMaster, Donald Æneas Dunlop, 1899
MacPherson, John, 1898
Maffey, Reginald William H., 1900
Maitland, Herbert L., 1892
Mansfield, Walter Charles, 1905
Marr, Gordon William Singer, 1901
Marsden, Ernest Ambrose, 1901
Marsh, Harold Seaward, 1903
Mason, Thomas William, 1903
Mawson, William, 1904
Menzies, Guy Dixon, 1896
Millard, Reginald Jeffrey, 1891
Mills, Arthur Edward, 1889
Molesworth, Edmund Harold, 1906
Moncrieff, Edward Woods, 1902
Morton, Gavin, 1890
Morton, John, 1890
Moseley, Arthur Henry, 1906

§ Admitted *ad eundem gradum.*

Murray, George Lathrop, 1894
Muscio, Allan, 1902
Newton, Alice Sarah, 1898
Newman, Ernest Ludlow, 1903
Newton, Wm. Thomas Joseph, 1900
Nolan, Herbert Russell, 1890
Oakes, Arthur, 1881§
O'Connor, Arthur Charles, 1896
O'Keefe, John James, 1898
O'Reilly, Susannah Hennessy, 1905
O'Reilly, Theophilus Linnell, 1906
Old, George Greensil, 1900
Olver, William Reath, 1900
Osborne, John King, 1903
Page, Earle Christmas Grafton, 1902
Pain, Ernest Maynard, 1897
Palmer, Charles Reginald, 1906
Palmer, Henry Wilfred, 1906
Park, Joseph, 1892
Parkinson, Thomas Carlyle, 1906
Paton, James Wright, 1900
Perkins, Alfred E., 1888
Perkins, Richard, 1904
Phillips, Arthur Bradridge, 1904
Plomley, Morris James, 1903
Pockley, Eric Osbaldiston, 1900
Pockley, Frank Antill, 1888§
Power, John Wardell, 1905
Pritchard, Alice, 1906
Pulleine, Robert Henry, 1898
Purser, Cecil, 1890
Quaife, Walter Thorold, 1906
Read, William Henry, 1898
Rees, Walter Llewellyn, 1902
Richards, Samuel J., 1893
Roberts, Alfred John Spencer C., 1905
Robertson, Lionel Joseph, 1903
Robinson, Grace Fairley, 1893
Robison, Erskine Hugh, 1896
Roe, James Martin, 1900
Roseby, Edmund Rupert, 1900
Sadler, Henry Frank, 1903
Sapsford, Clinton Pelham, 1906
Savage, Edward Joseph, 1900
Savage, Vincent Wellesley, 1901
Sawkins, Frederick John T., 1892
Scot-Skirving, Robert, 1888§
Scott, Edward Henry, 1893
Seldon, William, 1902
Sharp, Granville Gilbert, 1904
Sharp, W. Alexander Ramsay, 1902
Shaw, Frederick C. S., 1892
Sheldon, Herbert, 1898
Sheldon, Stratford, 1896
Shellshear, Cyril, 1905
Sheppard, Arthur Murray, 1890
Shirlow, Sydney Stewart, 1892
Shirlow, William John, 1892
Shorter, Herbert Leopold Ashton, 1899
Simpson, Francis George Macneill, 1905
Smith, Percy Edward Walton, 1905
Smith, Stewart Arthur, 1903
Spark, Ernest James T., 1895
Stanley, George Percival, 1891
Stephen, Edgar Horatio Milner, 1902
Stevens, William Woodburn, 1898
Stiles, Bernard Tarlton, 1906
Stokes, Edward Sutherland, 1891
Stuckey, Francis Seavington, 1902
Studdy, William Bradridge, 1895
Suckling, Frank Martin, 1903
Sweet, Geoffrey Bruton, 1893
Tange, Frank Septimus, 1902
Tarleton, John Willington, 1902
Taylor, Charles James, 1900
Terrey, Hedley, 1897
Thomas, George Bowen, 1901
Thomson, Jack Mowbray, 1903
Thomson, Jean Graeme, 1906
Tidswell, Frank, 1892
Throsby, Herbert Zouch, 1898
Townley, Percy Langford, 1890
Trindall, Richard B., 1889
Tudor-Jones, Evan, 1902
Ure, Edith, 1902
Ure, Sarah Louisa, 1905
Vallack, Arthur Styles, 1893
Veech, Michael, 1894
Verco, Clement Armour, 1901
Verco, Sydney Manton, 1900
Verge, Arthur, 1905
Vernon, Geoffrey Hampden, 1905
Vernon, Murray Menzies, 1904
Vivers, George Arthur, 1904
Wallace, Donald, 1902
Walton, William Bain, 1898
Walton, John Francis, 1903
Wassell, Joseph Leathom, 1897

§ Admitted *ad eundem gradum.*

Watson, James Frederick, 1903
Waugh, Richard Andrew Phipps, 1903
Welch, John Basil St. Vincent, 1906
West, Francis William, 1900
Wherrett, Ernest Albert, 1906
Whiteman, Reginald John Nelson, 1905
Willis, Charles St. Leger, 1906
Willis, Charles Savill, 1899
Windeyer, John Cadell, 1899
Woolnough, Robert Edmund, 1903
Wylie, Mary Wilhelmina, 1906
Young, Edgar Harold, 1905
Zlotkowski, Frederic Sobieski Wladimir, 1896

MASTERS OF SURGERY.

Abbott, George Henry, 1891
Affleck, Ada C., 1898
Ambrose, Theodore, 1902
Anderson, Arthur, 1902
Anderson, Hugh Miller, 1902
Armstrong, William G., 1888
Aspinall, Archibald John, 1906
Aspinall, Jessie Strahorn, 1906
Bancroft, Peter, 1888
Barling, James Eric Vernon, 1901
Barnes, Edmund Horatio, 1897
Barton, John a'Beckett Darvall, 1901
Bell, Harry Charles Rikard, 1904
Benjafield, Vivian, 1904
Bennetts, Harold Graves, 1896
Biffin, Harriett Eliza, 1898
Binney, Edward Harold, 1893
Blackburn, Charles Bickerton, 1899
Bligh, Erasmus A. R., 1905
Blue, Archibald Irwin, 1901
Boelke, Paul, 1893
Böhrsmann, Gustav Hall, 1898
Böhrsmann, Rudolph Hermann, 1894
Bond, Lionel Wilfred, 1904
Bourne, Eleanor Elizabeth, 1903
Brennand, Henry John W., 1899
Broadbent, Percy Lewis, 1902
Browne, Claude Seccombe, 1904
Buchanan, George Arthur, 1904
Buchanan, Joseph David, 1905
Burfitt, Walter Fitzmaurice, 1900
Busby, Hugh, 1900
Cameron, Donald Allan, 1901
Cargill, William Duthie, 1899
Carlile-Thomas, Julia, 1898
Challands, Frederick, 1892
Chisholm, Edwin Claude, 1904
Clarke, Gother Robert Carlisle, 1902
Clarke, Philip Sylvester, 1903
Cleland, John Burton, 1900
Coghlan, Iza Frances Josephine, 1893
Combes, Edgar Wm. Anthony, 1902
Connolly, Thomas Patrick, 1904
Conlon, William Aloysius, 1898
Cooley, Percy Glover, 1898
Corbin, Alfred George, 1900
Corfe, Anstruther John, 1904
Corlette, Cyril Ernest, 1892
Cosh, John Inglis Clark, 1897
Cowlishaw, Leslie, 1906
Craig, Robert Gordon, 1894
Crawley, Aubrey Joseph C., 1896
Dansey, St. John Warburton, 1903
D'Arcy, Constance Elizabeth, 1904
Davies, Reginald Laidlaw, 1901
Davidson, Leslie G., 1888
Davis, James Shedden, 1903
Day, Ernest James, 1906
Deck, George Henry Baring, 1901
Deck, John Northcote, 1902
Dey, Robert, 1898
Dick, Robert, 1892
Dight, Wilfred Billingsley, 1902
Dixon, Graham Patrick, 1897
Dunlop, Norman John, 1896
Durack, William Joseph, 1905
Eichler, Wm. Otto Heldmuth, 1900
Ellis, Lawrence Edward, 1898
Elworthy, William Henry, 1903
Fairfax, Edward Wilfred, 1899
Farrell, Robert Meredith, 1897
Fitzpatrick, Edward Bede L., 1903
Flashman, James Froude, 1894
Flecker, Oscar Sydney, 1902
Fordyce, Henry St. Clair, 1895
Forster, Redmond Clarence Hall, 1901
Fox, Hedley Ebenezer, 1905
Freshney, Reginald, 1892
Garde, Henry Lee, 1901
Gibson, Duncan David, 1906
Godsall, Robert Spencer, 1904
Goergs, Karl R. W., 1905

Graham, Mabel Jessie, 1902
Greenham, Eleanor Constance, 1901
Grey, William Charles, 1903
Gullett, Lucy Edith, 1901
Hall, Edwin Cuthbert, 1898
Hall, George R. P., 1895
Halliday, John Charles W., 1896
Handcock, Charles Lancelot, 1894
Harper, Margaret Hilda, 1906
Harris, John Solomon, 1906
Harris, Lawrence Herschell L., 1896
Harris, Samuel Henry, 1906
Harris, William Henry, 1897
Harris, Walter Eli, 1900
Harrison, Edgar Selwyn, 1906
Hart, Basil Lloyd, 1901
Henry, Arthur, 1889
Henry, Arthur G., 1888
Higgins, Frederick Charles, 1897
Hill, John Goodwin Watson, 1906
Hinder, Henry V. C., 1889
Hipsley, Percy Leslie, 1903
Holmes, Harry Glennie, 1900
Humphery, Esca Morris, 1903
Hunt, Claude Leopold W., 1891
Jackson, John W., 1895
Johnston, Langloh Parker, 1906
Jones, Philip Sydney, 1901
Kater, Norman William, 1898
Kay, Stuart, 1905
King, Aubrey Arthur, 1900
Kinross, Robert Menzies, 1894
Lancaster, Llewellyn Bentley, 1901
Langton, William Digan, 1903
Latham, Oliver, 1905
Lawes, Charles H. E., 1892
Leahy, John P. D., 1892
Lee, Henry Herbert, 1901
Leslie, James Robert, 1905
Lethbridge, Harold Octavius, 1904
Lightoller, George Henry Standish, 1906
Lipscomb, Thomas Walter, 1898
Ludowici, Edward, 1899
Luker, Donald, 1894
McClelland, Walter Cecil, 1896
MacCreadie, John Laing Martin, 1894
McCredie, Robert William, 1901
MacCulloch, Harrington Thomas Cuthbert, 1906
McDonnell, Æneas J., 1889
McEncroe, James Michael, 1905
Macintosh, Alexander Hay, 1901
McKay, William John S., 1891
Mackenzie, John, 1899
Mackinnon, Roger R. S., 1894
McLean, George, 1900
MacMaster, Donald Æneas D., 1899
MacPherson, John, 1898
Magarey, Frank William A., 1899
Maitland, Herbert L., 1892
Mansfield, Walter Charles, 1906
Marsden, Ernest Ambrose, 1901
Mawson, William, 1904
Menzies, Guy Dixon, 1896
Millard, Reginald Jeffrey, 1891
Mills, Arthur Edward, 1889
Molesworth, Edmund Harold, 1906
Moncrieff, Edward Woods, 1902
Morton, Gavin, 1890
Morton, John, 1890
Moseley, Arthur Henry, 1906
Murray, George Lathrop, 1894
Newton, Alice Sarah, 1898
Nolan, Herbert Russell, 1903
O'Connor, Arthur Charles, 1896
Olver, William Reath, 1901
O'Reilly, Theophilus Linnell, 1906
Osborne, John King, 1903
Page, Earle Christmas Grafton, 1902
Pain, Ernest Maynard, 1897
Palmer, Charles Reginald, 1906
Palmer, Henry Wilfred, 1906
Park, Joseph, 1892
Parkinson, Thomas Carlyle, 1906
Perkins, Alfred E., 1888
Perkins, Richard, 1904
Phillips, Arthur Bradridge, 1904
Plomley, Morris James, 1903
Pockley, Eric Osbaldiston, 1901
Power, John Wardell, 1905
Pritchard, Alice, 1906
Purser, Cecil, 1890
Read, William Henry, 1898
Rees, Walter Lewellyn, 1902
Richards, Samuel J., 1896
Roberts, Alfred John Spencer C., 1905
Robinson, Grace Fairley, 1893
Robison, Erskine Hugh, 1896
Roseby, Edmund Rupert, 1902
Sandes, Francis Percival, 1899
Sapsford, Clinton Pelham, 1906

Savage, Edward Joseph, 1901
Savage, Vincent Wellesley, 1901
Sawkins, Frederick John T., 1892
Scott, Edward Henry, 1893
Sharp, Granville Gilbert, 1904
Sharp, Walter Alex. Ramsay, 1902
Shaw, Frederick C. S., 1892
Sheldon, Herbert, 1898
Sheldon, Stratford, 1896
Shellshear, Cyril, 1905
Sheppard, Arthur Murray, 1890
Shirlow, Sydney Stewart, 1892
Shirlow, William John, 1892
Simpson, Francis G. N., 1905
Smith, Grafton Elliott, 1893
Smith, Percy Edward Walton, 1905
Smith, Stewart Arthur, 1903
Spark, Ernest J. T., 1895
Stacy, Harold Skipton, 1898
Stanley, George Percival, 1891
Stephen, Edgar Horatio Milner, 1904
Stevens, William Woodburn, 1900
Stiles, Bernard Tarlton, 1906
Stokes, Edward Sutherland, 1891
Stuckey, Francis Seavington, 1902
Studdy, William B., 1895
Suckling, Frank Martin, 1903
Sweet, Geoffrey Bruton, 1893
Tange, Frank Septimus, 1902
Taylor, Charles James, 1900
Terrey, Hedley, 1900
Thomas, George Bowen, 1901
Thomson, Jack Mowbray, 1903
Thomson, Jean Graeme, 1906
Tidswell, Frank, 1892
Townley, Percy Langford, 1890
Trindall, Richard B., 1889
Tudor-Jones, Evan, 1902
Ure, Edith, 1902
Ure, Sarah Louisa, 1906
Vallack, Arthur Styles, 1893
Veech, Michael, 1894
Verco, Sydney Manton, 1900
Verge, Arthur, 1905
Verco, Clement Armour, 1901
Vernon, Murray Menzies, 1904
Vivers, George Arthur, 1904
Walton, William Bain, 1898
Wassell, Joseph Leathom, 1897
Watson, James Frederick, 1903
Welch, John Basil St. Vincent, 1906
West, Francis William, 1900
Whiteman, Reginald J. Nelson, 1905
Willis, Charles Savill, 1899
Wilson, Thomas George, 1899
Windeyer, John Cadell, 1899
Woolnough, Robert Edmund, 1903
Wylie, Mary Wilhelmina, 1906
Young, Edgar Harold, 1905
Zlotkowski, Frederic Sob. W., 1896

BACHELORS OF DENTAL SURGERY.

Barnes, Margaret Estelle, 1906
Bond, Harold Henry, 1906
Bradley, John Houghton, 1906
Crouch, Frederick Richard, 1906
Dolan, Alfred Pearson Berkeley, 1906
Hardie, Howard Gordon, 1906
MacTaggart, Edgar Alexander, 1906
Marshall, Frank, 1906
Moxham, Cecil George, 1906
Neave, Bevan Walter, 1906
Pread, Annie, 1906
Starkey, John Norman, 1906
Stockwell, Leslie George, 1906

LICENTIATES IN DENTAL SURGERY.

Boys, Reginald Septimus, 1905
Burkitt, Cyril Theodore, 1905
Cozens, George Charles, 1906
Clark, John James, 1905
Deck, Norman Cathcart, 1906
Grosse, Edward Henry, 1906
Kirchner, Edward Ravane, 1906
Neale, James Harold, 1905
Pridham, Edward, 1906
Punch, James, 1906
Riley, Edward Blomfield Gerard, 1906
Starkey, William Augustus, 1906

DOCTORS OF SCIENCE.

Petrie, James Matthew, 1905
Pollock, James Arthur, 1905
Woolnough, Walter George, 1904

BACHELORS OF SCIENCE.

d'Apice, John Edmund F., 1900
Bennett, Agnes Elizabeth L., 1894
Birks, Lawrence, 1901§
Boyd, Arthur, 1901
Brearley, Joseph Henry Draper, 1894
Brennan, Sarah Octavia, 1898
Burfitt, Walter Fitzmaurice, 1898
Close, John Campbell, 1903
Corbin, Albert George, 1895
Crane, John T., 1887
Davis, Agnes Marianne Harrison, 1898
Dunlop, Norman John, 1895
Dwyer, Thomas Cahill, 1906
Ewing, Thomas, 1906
Flashman, James Froude, 1893
Fletcher, Archibald W., 1888
Forde, James, 1893
Goddard, Ernest James, 1906
Gray, George James, 1905
Hall, George Reginald Percy, 1893
Hallman, Edward Francis, 1906
Harker, George, 1899
Harris, Marian, 1902
Heden, Ernest Charles Burgess, 1901
Horton, Marion Charlotte, 1897
Hughes, Michael O'Gorman, 1893
Hunt, Fanny E., 1888
Jensen, Harold Ingemann, 1904
Johnston, Stephen Jason, 1902
Jordan, Geo. Edward Gustavus, 1901
Leverrier, Frank, 1885
MacMaster, D. Æneas Dunlop, 1897
McClelland, Walter Cecil, 1894
McKay, William J. S., 1887
MacPherson, John, 1896
Madsen, John Percival Vissing, 1900
Mason, William Henry, 1905
Mawson, Douglas, 1905
Mort, Harold Sutcliffe, 1901
O'Reilly, Susannah Hennessy, 1903
Peterson, Arthur James, 1901
Priestley, Henry, 1906
Robison, Erskine Hugh, 1894
Ross, William John Clunies, 1891§
Sharp, Granville Gilbert, 1902
Sharp, Lewis Hey, 1906
Sheldon, Stratford, 1894
Shirley, John, 1887§
Taylor, Thomas Griffith, 1904
Vonwiller, Oscar Ulric, 1902
Waterhouse, Gustavus Athol, 1899
Watt, John Alexander, 1894
Weatherburn, Charles Ernest, 1905
Weston, Percy Leonard, 1901
Wilson, Richard Cunliffe, 1901
Wood, E. Clarence, 1885

MASTERS OF ENGINEERING.

Bradfield, John Job Crew, 1896
Cook, Walter Edmund, 1899§
Dare, Henry Harvey, 1894
MacTaggart, John Norman C., 1905
Vicars, James, 1892

BACHELORS OF ENGINEERING.

(Civil Engineering.)

Amphlett, Edward Albin, 1889
Amphlett, Henry Martin, 1897
Arnott, Robert Fleming, 1895
Barraclough, Samuel Henry, 1892
Beaver, William Richard, 1899
Birch, William John, 1891
Bowman, Archer, 1889
Boyd, Arthur, 1902
Boyd, Robert James, 1898
Brearley, Joseph Henry D., 1895
Bucknell, Louis Geoffrey, 1891
Colyer, Moreton John Godden, 1896
Corfe, Duncan Bertram, 1903
Corlette, James Montagu Christian, 1902
Craig, Alexander Donald, 1895
Deane, Henry James, 1897
Doak, Walter James, 1895
Fitz, Norman, 1888
Hawken, Roger William H., 1900
Hayley, Percy Edmund Llewellyn, 1893
Henning, Edmund Tregenna, 1903
Hole, William Francis, 1896
Jackson, Clements F. V., 1895
Ledger, William Henry, 1893

§ Admitted *ad eundem gradum.*

Madsen, John Percival Vissing, 1901
Martyn, Athelstan Markham, 1905
Mathison, Walter Charter, 1899
Merewether, Edward A. M., 1885
Myers, Harold Walter, 1901
Platt, Cecil Percival, 1905
Poole, William, 1900
Roberts, James Waller, 1892
Ross, Colin John, 1891§
Rowlands, Harold Berkeley, 1897
Rygate, Philip W., 1885
Sawyer, Basil, 1896
Seale, Herbert Percy, 1894
Smail, Herbert Stuart Inglis, 1897
Smail, John Alexander Moore, 190
Stephens, Charles Thomas, 1892
Strickland, Tom Percival, 1897
Thompson, William Mann, 1886
Wallach, Bernard, 1897
Ward, Thos. Wm. Chapman, 1886
Warren, Ernest William, 1897
White, Norman Frederick, 1894
Wood, Ebenezer Clarence, 1885
Wood, James Patrick, 1895
Woore, John Morris Simeon, 1896

(Mining and Metallurgy.)

Armstrong, John Nicholas Fraser, 1904
Ball, Lionel Clive, 1900
Barker, Reginald Frederick, 1900
Barr, James, 1904
Bennett, Vyvyan Christopher, 1904
Black, Reginald Austin Wm., 1898
Boyd, William Sprott, 1901
Boydell, William Guy Broughton, 1905
Bridge, John Morrice, 1906
Burgess, John Henry, 1905
Caddy, James Pascoe, 1903
Cameron, Colin Bowman, 1902
Campbell-Brown, George Frederick, 1905
Caro, Phillip, 1904
Clayton, Cyril Henry Joseph, 1903
Cohen, Arthur Francis, 1904
Coldham, John Cockburn, 1906
Corlette, James Montagu Christian, 1903
Cropper, Cecil Howe, 1906
Dart, Riverine Norman, 1904
Davies, Harry Warlow, 1903
Debenham, Arthur John, 1903
Delohery, Ernest Cecil, 1903
Dight, Arthur Hilton, 1905
Dixon, James Thomson, 1895
Docker, Alfred Brougham, 1903
Foxall, Henry George, 1906
Foy, Leslie Harold, 1903
Freeman, Ambrose William, 1904
Freeman, Charles Cuthbert, 1902
Garde, Henry Thomas, 1903
Garry, John Joseph Patrick, 1905
Giblin, Norman Ernest, 1903
Gibson, Charles George, 1900
Gorringe, Lloyd Septimus, 1901
Gould, Hubert John, 1902
Gray, George James, 1903
Gregson, William Hilder, 1901
Grut, Charles Frederick de Jersey, 1901
Hall, Ernest Kingsbury, 1903
Harris, Herbert Theodore Rawson, 1905
Heden, Ernest Charles Burgess, 1902
Isaacs, Robert McIntosh, 1904
Hill, James Henry Fraser, 1904
Jack, Robert Lockhart, 1899
Jackson, Clements Frederick V., 1900
Jackson, Frederick Henry, 1903
Jenkins, Charles Warren B., 1895
McArdle, Frederick Owen, 1904
McCrae, Arthur Gordon, 1903
Mack, Augustus Charles, 1902
McMaster, Colin Forbes, 1906
Mawson, Douglas, 1902
More, George Allan, 1901
Mort, Selwyn Robert, 1900
Nardin, Ernest Willoughby, 1894
Nardin, Collis Carleton, 1905
Newman, James Malcolm, 1901
Owen, Tom Mackellar, 1905
Palmer, Thomas Henry, 1898
Patterson, Benjamin Gilmore, 1904
Peterson, Arthur James, 1903
Penman, Arthur Percy, 1906
Piddington, Francis Llewellyn, 1898
Poole, William, 1900

§ Admitted *ad eundem gradum.*

Rae, Thomas Robert, 1905
Reid, Norman, 1898
Reid, Robert Stewart, 1905
Richardson, Rosslyn James Dalyell, 1903
Robertson, James William, 1904
Saunders, George Joseph, 1904
Shellshear, Wilton, 1904
Simpson, Edward S., 1895
Skerritt, Alfred William, 1906
Skuthorpe, Garnett Stemyn, 1905
Slee, Richard Thilthorpe, 1901
Spier, Reginald Vincent, 1902
Stanley, Frederick Vernon, 1902
Stephen, James Farish, 1905
Stewart, Alexander Hay, 1902
Taylor, Thomas Griffith, 1905
Thomas, David, 1902
Try, John Cowley, 1902
Twynam, Henry, 1896
Verge, John, 1903
Waine, Victor Joseph, 1906
Walker, Hugh, 1903
Ward, Leonard Keith, 1903
Waterhouse, Gustavus Athol, 1900
Webb, Sydney Douglas, 1905
Weigall, Arthur Raymond, 1894
Weigall, Henry Stuart, 1903
Whiteman, Woodleigh Dowling, 1906
Whitfeld, Hubert Edwin, 1902
Williams, Leslie Ballesat, 1902
Winton, Louis Joseph, 1901
Wilson, John Bowie, 1897
Wilson, Richard Cunliffe, 1903
Wood, Henry, 1903
Woodburn, Joseph William, 1903

(*Mechanical and Electrical.*)

Bellemey, Sidney James, 1906
Brooks, Harold Arthur, 1905
Cowlishaw, Roy Gratton, 1906
Myers, Harold Walter, 1903.
Weston, Percy Leonard, 1904
Woodcock, Lancelot Richard, 1905

UNDERGRADUATES.

Faculty of Arts.

FIRST YEAR.

Adams, Harold William
Ardill, Katie
Anderson, Lily Winifred Marshall
Armstrong, Netta Holroyd
Atterton, Beatrice Sophia
Bender, Edwin Cormack
Blair, Annie Scott
Boulton, Nigel Philip
Bowman, Reginald McDougall
Breckels, Ernest Oliver
Brierley, Alan Nunan
Brown, Catherine Vernon
Brown, Millicent Amiel Macmillan
Bundock, Harry Charles
Calow, Paul Francis
Campbell, Arthur Lang
Carroll, Anthony James
Carruthers, Ernest Spencer William
Carter, Albert George
Church, James Vivian
Curtis, Percy Murray
Cohen, Leopold Alfred
*Dallen, Evelyn Scott
David, Mary Edgeworth
Davis, Thomas Earls
Dent, Oswald Gordon
De Putron, Vera Ruth
Dickson, Nora Laing
Donaldson, John Ebenezer
Duffy, William
Duncan, Annie Burnett
Evans, Joseph
Ferguson, Ernest Adie
Ferrier, Elizabeth Irene
Fitzherbert, Reginald A.
Flower, Willoughby
Gainford, Gerrish le Barron
Gale, John Thomas Whicker
Gibson, Alfred John
Grieve, Alexander Campbell
Grieve, Euphrosyne Mary
Grimley, Edwin
Hammand, Charles Ackroyd
Harris, Reginald Wm. Sydney
Hayes, James William
*Hill, Hebe Inez Pauline
Hooke, Richard Watkins
Howard, George Charles
Hume, Frederick William
Jackson, Claude Phillip
James, John Alexander
Jenkins, Winifred Marian Elizabeth
Kennedy, Hans McMurdie
Jones, Roy Warren Russell
Kaeppel, Cail Henry
Kay, William Elphinstone
King, Ora Ronilda Zlotira Zlotkowski
Lane, John Bayley
Lane, Laura Elizabeth
Leslie, Walter Cyril Landsborough
Levinge, Vera
Lloyd, Charles Humphrey
McCarron, Robert Graham
MacDonald, Enid Craig
Macdonald, Flora
McElhone, George Hill
Macken, James Victor
Mackinnon, Malcolm
*McKensey, Aleathea Mary
*Maclardy, Una
Maclellan, Annette
Macphee, Isabel
Macqueen, Ronald Alan Archibald
Malcomson, John Alexander
Mann, James Eliot Furneaux
Marchant, Arthur Dudley Bathgate
Matheson, Minnie
Marshall, Thomas Edward
Maxwell, Alan Victor
Meek, Hubert Kingsley
Metcalfe, James Beverley
Millett, William Leonard
Millett, Roy Baldwin
Moffitt, William Heath
Mollison, Arthur John
Morley, Muriel Violet
Morris, Mabel
Mote, Livingstone Charles
Murphy, John J.
Newmarch, Roy Leathes
Palmer, Charles Herbert
Pearce, Wilfred Henry Starkey

* Unmatriculated.

Perry, Irene Francis
Poggioli, Henry Hercules
Pratt, Annie Marian
Preston, Wilfred Herbert
Ramsay, Muriel Berry
Rawson, Hubert Wyatt Hay
Rayson, Roy
Robertson, James Inglis
Robinson, Frederick Walter
Roche, Frederic William Castle
Ross, Colin Chisholm
Rudder, Llewellyn Bisset
Scott, John Henry Victor
Scott, Charles Frederick
Sharp, Percival John
Shaw, Richard Glinn Vallack
Shortland, Edith
Simonds, Eugene Francis
Sinclair, Edward Adams
Sly, Eileen Meares
Sly, Marion Constance Meares
Smyth, Marjorie Kane
Stafford, Albert Leslie
St. George, Floris Eva Sterne
Stephen, Montague Cousett
Talbot, Ailsie
Tarleton, Arthur
Taylor, Dorothy
Taylor, Margaret Helen
Terrey, Lisle Chiene
Thom, Alec Osborne
Thompson, Edith Moginie
Traill, Ida Gertrude
Tivey, Eric Alfred
Welch, Herbert Locksley St. Vincent
Waley, Robert George Kinloch
Walker, Edward Bell
Wark, Gertrude Margaret
Watt, Herbert Cecil
Weston, Claude Alfred
Wilkinson, Lancelot Victor
Wilson, Jessie Leila
Yarnall, Frederick Edward
Yarnall, John William

SECOND YEAR.

Archdall, Henry Karow
Ash, Fortescue Leo
Alexander, Hilda Mary
Bates, Arthur William
Bennett, Sidwell
Bowman, Myril McDougall
Brodziak, Birdie Kate
Browning, Humphrey Robert
Burnell, Frederick Spencer
Castlehow, Stanley
Chapman, Benjamin Burgoyne
Cohen, Fanny
Croft, Edith
Davis, Isabel Ridley Havergal
Deffell, Alice Hibbert
Densley, Lucy Norma
De Putron, Violet
Dixson, Thomas Storie
Duesbury, Pearl
Edwards, Henry George
Evans, Joseph
Fallon, Cyril Joseph
Fitz, Blanche
Fitzpatrick, Mabel Darling
*Flecker, Martha
Flower, Emily Monica
Gourlay, Mary Elizabeth Florence
*Gullett, Isabel
*Graham, William Pearce
Hall, Austin Vine
Ives, Margaret
Jopling, Mildred Hilda
Lane, George Thomas
Lee, Norah St. George
Light, Hilda Vera
Lion, Rosine
Laurence, Raymond Lister
Lodder, Nellie
McElhone, Frank Eric
McGill, Alec Douglas
McKibbin, Rachael
Malcolm, Olive Matilda
Marks, Gladys Hope
Marsh, Alison Mary
Mitchell, Clarice
Murray-Prior, Mabel
Norman, Keith Dixon
Pocock, Robert Bakon
Pridham, Alice Margaret
Read, Thomas Walford Vero
Roseby, Clara
Sands, William George
Sherwood, Edith Marion
Simpson, Robert Ian

* Unmatriculated.

Small, Ethel Mary
Snow, Stuart Bishop
Sinclair, George Wade
Stack, Walter Jaques
Stokes, Marion Elsie
Tomkinson, William
Utz, Harold Stewart
Vickers, Leslie
Walker, John
Wall, William Thomas Stanislaus
Watts, Ethel Lucy
Webb, James Eli
Whyte, Henry William
Woodlands, Mabel Rose
Wyndham, Elinor Margaret

THIRD YEAR.

Badman, Gladys Eunice
Boeth, Irene Mildred
Butler, Lilian
Brierley, Nina Benson
Campbell, Florence Eva
Clayton, Hector Joseph Richard
Clouston, Lavinia
Crane, Bertha Elizabeth
Culpin, Daisy Ellen
David, Margaret Edgeworth
Deane, Wallace
Dunlop, Mabel Laura Tange
Fidler, Ethelwyn
French, Bernard Russell
Fry, Eva Jane
Garnock, Reginald Charles David
Gordon, George Acheson
Greville, Minnie
Hall, Florence Sidney
Hamilton, John Simpson
Harker, Mabel
Howard, Vera
Jackson, Elizabeth
Jones, Grace Eveline
Jones, John Russell
King, Clarence Adrian Zlotkowski
Lydall, John French
McKeown, Frederick Maurice
Maclardy, Margaret McIntyre St. Clair
Martin, LauraMargaret
Mills, Archibald Joseph
Minter, Clifford
Nimmo, William Muir
Noad, Emma Alison
North, Frederick
Palmer, Allan Burnet
Paxton, Grace
Pearce, William Thomas Louis Archdall
Ralston, Alexander Windeyer
*Rapkins, James Samuel
Robinson, Katherine
Robinson, Mabel Hawthorne
Russell, William Patrick
Schleicher, Bernard Michael John
Scroder, Aphra Frances
Smithers, Margery Ada
Stanton-Cook, Millicent Ivy
Stewart, William Pentleton
Teece, Ashley Howard
Tietkens, Emily Mary
Wallach, Henriette
Ward, Bertha Raymond
Watkins, Hubert Lance
Watson, Lindsay George Herbert
Willis, Carlyle Gordon
Webb, Bernard Linden
Young, Hilda May

EVENING STUDENTS.

Faculty of Arts.

FIRST YEAR.

Allen, William V.
Allen, Frederick Thomas
Barlex, Harrie Norman Clayton
Bentley, Ernest G.
Bland, Francis Armand
Bowden, Robert
Burgess, James Clement
Bussmann, Frederick

* Unmatriculated.

Cane, Percy Frank
*Campbell, Harold George
Carroll, Owen Osgood
*Chantard, Léonie
*Collins, Clarence Richard
*Cox, Percival Benjamin
Clemens, William Francis
Collins, Lillian
Dart, George
Davies, Edith Mary
Eldershaw, Philip Sheridan
Evans, Evan Gustave Severn
Evans, Harold Victor
Ferrie, Alston Maclurcan
Forsyth, William
Gardiner, Louis
Geer, Lilian Ella
Grahame, George Frier
Grey, Temple Hamilton
Grey, Edward Egerton
Hall, William Morton Chilvers
*Hatfield, William Frederick James
Houston, Robert
*Hurt, Percy Henry John
*Jackson, Albert
Little, Edy
Lauder, Lily Jean Denholme
Lee, Amos John
Lewis, Errington
Lovell, Mildred
McCauley, Joseph Francis
MacDonald, James Anderson
McMinn, Wilfred
*Mann, John Wills
*Moffitt, Herbert William
Moore, Charles Henry
McAulay, Mary
Nutman, Robert Ernest
Olden, Percy Penrhyn
Owen, Thomas Alexander
Parker, Edwin Henry William
Peterson, Vivian Woodward
*Riby, Lucy
Roberts, William
*Ryan, Joseph C.
Shaw, Harold Baker
Scott, Rupert King
Smith, Allan Malcolm
Spence, Jeanie Lockhart
Stephen, John Newton
Tait, Ernest Waldegrave
Teasdale, Charles Andrew
Thom, James Campbell
*Toms, Rose
Thomson, Leslie Napier
Tugwell, Frederick William
*Thompson, William Alexander
*Whitfield, Hector William
Wilby, William
Wilkinson, Lancelot Victor

SECOND YEAR.

Abrams, Reginald Orton
Armstrong, Alexander M.
Barlex, Harrie Norman Clayton
Bavin, Lancelot
Berry, David Houston
*Binns, Kenneth
*Campling, Carrie
Cooper, Douglas Maxwell
Crane, Clive Charles
Curry, John Nicholas
Cusbert, Allan William
*Derrin, Andrew
Douglass, Albert Horace
Gombert, France
*Hagarty, L. J.
Harvey, Robert Frederick
Hicks, Aleck Walter
Hunt, Aubrey Fitzmaurice
Hunt, William Edwin
*Jones, Walter
Leroy, Alfred Ernest
Lynch, Joseph
McIlwraith, William Daniel
McKean, Alexander
Miles, Benjamin James Vivian
Monro, John Patterson
Olsen, John Murray Sydney
Page, Reginald Arthur
Ranson, Joseph Robert
Sheldon, Samuel Philip
Short, Frederick
Smith, Charles Percy
Swain, Edith Muriel Maitland
West, William Montague
Young, Herbert Russell

* Unmatriculated.

THIRD YEAR.

Brown, James
Cantrell, Sydney William
Chandler, Harry
Cowie, Herbert
Davies, Ernest Stanley
*Derrin, A.
Ewing, Thomas, B.Sc.
*Jacobs, Ernest G.
*Jones, W.
Gowing, Ellis Norman
Laird, Henry Hermann
McDonald, William A.
Mackaness, George
McKean, Leslie John
Moore, Henry Edington
Philip, Frederick Charles
Reynolds, Alfred John
Rickard, Jonathan Charles
Russell, William Patrick
Sproule, Robert
Tarrant, Thomas Ambrose
*Wright, Frederick
*Zieman, Oscar David

ATTENDING POST-GRADUATES COURSES.

Coleman, Ernest Albert, B.A.
Cramp, Karl Reginald, M.A.
Edwards, John, B.A.
Fletcher, Michael Scott, M.A.
Holden, Florence Mackenzie, B.A.
Little, Vivian Agincourt Spence, B.A.
Lovell, Henry Tasman, B.A.
McLean, Archie Lang, B.A.
Northcott, Clarence Hunter, B.A.
O'Brien, Kathleen Moira, B.A.
Parsons, Florence Louey, B.A.
Petrie, Edith Maude, B.A.
Portus, Garnet Vere, B.A.
Sproule, Margaret, B.A.
Webb, Bernard Linden, B.A.

FACULTY OF LAW.

FIRST YEAR.

Christie, George
Lowe, Matthew Henry
McDonald, Eugene Francis

SECOND YEAR.

Baxter-Bruce, Arthur C.
Thompson, Edmund Harvie

THIRD YEAR.

Clayton, Hector Joseph Richard
Collins, Clifford Malua, B.A.
Dibbs, Leonard Burton
French, Bernard Russell
Garnock, Reginald Charles David
Graham, Albert Nelson
Haigh, Victor, B.A.
Harris, Lewis Alexander, B.A.
King, Charles Adrian Zlotkowski
Laird, Henry Hermann
Lydall, John French
Markell, Horace Francis, B.A.
Minter, Clifford
Moore, Henry Edington
Moylan, William Patrick, B.A.
McKean, Leslie John
Ralston, Alexander Windeyer
Rickard, Jonathan Charles
Russell-Jones, John
Sproule, Robert
Toose, Stanley Vere

FOURTH YEAR.

Coen, Francis, B.A.
Hertzberg, Marcus, B.A.
Hollingdale, Bernard Austin, B.A.
Hughes, John, B.A.
Makin, William, B.A.
O'Grady, John Edward
O'Reilly, Walter Creswell, B.A.
Quinn, John Joseph, B.A.
Spence, John, B.A.
Townsend, Samuel Edward, B.A.

* Unmatriculated.

Waring, Herbert Raymond, B.A.
Watt, Thomas Evans, B.A.
Williams, Keith

FIFTH YEAR.

Artlett, William Langridge, B.A.
Beckenham, John George, B.A
Bonney, Reginald Schofield, B.A.
Deane, Claude S.
Ebsworth, Samuel Wilfred, B.A.
Fisher, Arthur Donnelly, B.A.
Gahan, Burriss
Grove, Frederick Thomas
Halloran, George Henry, B.A.
Henry, Hugh, B.A.
Jordan, Frederick Richard, B.A.
Manning, Hugh Eldred, B.A.
Merrick, John
Murray-Prior, Robert Sterling. B.A.
O'Reilly, Walter Cresswell, B.A.
Pratt, Walter Henry, B.A.
Real, Edward Thynne, B.A.
Watts, Percy Richard, B.A.
Wheeler, Arthur Russell, B.A.

FACULTY OF MEDICINE.

FIRST YEAR.

Aspinall, Arthur Martel
Ascher, Clive Lovell Gottschalk
Barrow, Isaac Manly, B.A.
Berge, Carl Gustav
Blaxland, Falkner
Booth, Fred Stanley
Bourne, Harold Thornton
Boylan, John
Bray, Gordon Wolsley
Brettingham-Moore, Edward
Bridges, Frederick John
Bruce, James Whitson
Byrne, George Cumming
Clayton, Harry John
Clipsham, William Brookes
Cohney, Solomon
Cosgrove, Charles
Curtis, George Cyprian
Davis, Neville John
Dawson, Arthur Lacy
Ducker, Norman Graham
Edye, Benjamin Thomas
Fetherstone, Leslie
Finley, Cecil Aubert
Fitzgerald, Maurice
Fitzhardinge, Richard Grantley
Fletcher, Wallis Mervyn Alfred
Fowler, Cosmo William
Fox, Edith Emily
Gaden, Keith Barton
Halloran, Garnet Reginald
Harrison, Bede James Michael
Hinder, Thomas
Hittmann, Frederic Charles Bruce
Holmes à Court, Alan Worsley
Humphries, Herbert Gordon
Hunt, Gladstone Montague
Jones, Sydney Evan
Kenny, John
Kenny, Joseph Patrick
Lee, Harrie Bertie
Lilley, Edwyn Mitford
Lindeman, Grant Bramhall
Little, Elaine Marjory
Macartney, George William
McIntosh, Alexander Menzies
McKee, James Walter Stewart
McLean, Archibald Lang
McLennan, Simon
Makinson, Gilbert Philip
Markwell, Norman Walter
Martin, Robert
Martin, Walter Wallace
Mellor, Ernest James
Middleton, James
Molesworth, Cecil Stanley
Morris, Emanuel Sidney
Nathan, Gilbert Grace
Newton, Adam John
Norrie, Harold Francis Joseph
Nowland, Horace Henry
Oatley, Frederick Dudley Weedon
Parker, Thomas Eric
Paton, James Thomson
Pitt, Clive Nelson
Pockley, Francis Guy Antill
Poulton, Reginald Lancelot
†Pye, Cecil Robert Arthur

† Not passing through the regular course.

Robertson, May Douglas
Robertson, Norman Keith
Robertson, William Eric Kossuth
Sear, Herbert Roy
Shellshear, Walter Guy
Sherwin, Thomas Aylwin
Silvester, Vernon Henry
Thomson, Ewing George
Tooth, Frederick
Turner, Trevor
Vance, Edmund Bruce Mortimer
Vernon, Henry Silvester
Waddell, Henry James
Waldron, George Dibbs King
Walker, Allan Seymour
Ward, Hugh Kingsley
Weedon, Stephen Hertford
Wooster, Frank Cowper

SECOND YEAR.

Abernethy, Cecil William
Arnold, Aldous Campbell
Barton, Alan Darvall
Beatty, Harold Ramsay
Blumer, George Albert
Brierley, Frank Sheppard
Brooks, William Seymour
Burfitt, Mary Boyd
Curtin, Austin Sydney
Dalyell, Elsie Jean
Dey, Lindsay Alexander
Dunlop, Leslie William
English, Robert Joseph
Ewing, Thomas, B.Sc.
Fitzhardinge, John Fortescue Grantley
Freeman, Margherita Mahy
Foy, Leslie Harold, B.E.
Fowler, Enoch
Goddard, Thomas Herbert
Hamilton-Browne, Elizabeth Isabel
Haynes, Arthur Richard
Lentaigne, John Gerald
Luddy, John Joseph
Macintosh, Cyril Leslie Stewart
Macintosh, George Donald
Maclean, Lillian Alexia
Marsh, Harold Theodore
Matthews, Walter Frederick
Mobbs, Athol Walter
Norrie, George
Norrie, James
Parker, Leslie Richard
Parnell, Ethel
Paul, Charles Norman
Petherbridge, Walter Charles
Pittman, Ernest Ellis
Priestley, Henry, B.Sc.
Purves, Allan Melrose
Rich, Vivian Morris
Roger, Robert
Rorke, Frederick Charles
Rorke, Sydney Norman
Schenk, Theodor William George Henry
Schmidt, Egmont Theodor Carl
Smith, Clara Rebecca
Smith, Clive Nigel
Smyth, John Sands
†Solling, Frances Grace
Storey, John Colvin
Tait, Gordon Leslie
Thompson, William Barber
Whiting, Keith

THIRD YEAR.

Allen, Hugh George
Barron, George Moncrieff
Beazley, Raymond
Beeston, William Read
Body, Eliel Edmund Irvine
Bullock, Howard
Candlish, Robert Smith, B.A.
Carroll, William John Smyth, .A.
Child, Sophia Ruth
Coen, Bernard
Croll, Gifford
Crothers, Charles Alexander
Docker, Ernest Noel Brougham
Ellard, William Christian
Fahy, James Francis
Ferguson, Eustace William
Fitzpatrick, Bernard Joseph, B.A.
Fraser, Donald, M.A.
Golledge, Kenneth Alfred
Grigor, William Ernest
Groundwater, John Leslie
Hill, Douglas Bayly
Hoets, John William van Rees
Hughes, James

Johnston, Herbert Huff
Lyons, Ettie, B.A.
McPhee, Vincent Joseph
Mackenzie, Donald Stuart
McKillop, Lachlan Martin
Murray-Prior, Mabel
Nathan, Venour Vigne
Oxenham, Humphrey Bede
Parkinson, Henry Hallam
Parry, Lloyd Davenport
Patterson, Mervyn Stuart
†Perston, Arthur Robertson
Powell, James William Garnett, B.A.
Rogers, Leslie Halse
Sampson, George Atkin
Sinclair, Archibald Fletcher
Smith, Gerald Keith
Smith, Hilton Charles Garnett
Smith, Kenneth
Stafford, Herbert Leslie
Stewart, Colin Percival
Talbot, Ethel
Tebbutt, Arthur Hamilton, B.A.
Thompson, Clive Wentworth
Veech, Michael Stanislaus
Verge, Cuthbert Arnold
Waddy, Richard Granville
Woodburn, James John

FOURTH YEAR.

Adams, Edith Mary
Archdall, Mervyn
Bottrell, Edwin Horace
Brearley, Edwin Andrew, B.A.
Brookes, George Arthur
Browne, Elsie Forrest
Collier, Frederick William Deane, B.A.
Colvin, Arthur Edmund
Cotton, George Reginald Cope
Dickinson, Evelyn Elizabeth
Dunn, Archibald Jamieson
Elwell, Laurence Bedford
Flecker, Hugo
Fox, Arthur Wesley
Furber, Rupert Iggulden
Giblin, William Eric
Harris, Henry
Heaslop, James William
Heydon, George Aloysius Makinson
Hutchinson, Eric Lloyd
Larkins, Nicholas Clement
McClelland, Reginald Eustace
Macfarlane, Henry
MacFarlane, John Stuart
Martin, Harold Joseph
Matthews, Henry Delahunt
O'Halloran, Charles Michael
Prevost, Richard Lewis de Teissier
Ramsden, Edward Maxwell
Ritchie, Harold John
Rogers, Francis Cecil
Rutherford, Constance Muriel, B.A.
Stephens, Frederick Glover Neason
St. Vincent-Welch, Kenyon
Tomlinson, George Leigh
Verge, John, B.A.
Weedon, Cyril James

FIFTH YEAR.

Bridge, Norbert Henry
Binns, William Johnstone, M.A.
Bradley, Clement Henry Burton
Cahill, Arthur Charles
Campbell, John Stuart, B.A.
Chapman, Herbert Owen
Conolly, Henry Willans
Cook, Sydney Leicester, B.A.
Craig, Francis
Deakin, John Edward Ferdinand
Diethelm, Oscar Albert Anton
Edwards, James George
Gilchrist, James Joseph
Gillespie, Arthur Paul
Graham, David Hannam
Hammand, Kendall
Hansard, Norman William
Mackenzie, Arthur Joseph
MacInnes, Angus, B.A.
Maher, Charles Weston
Miller, Robert Christy
Moran, Herbert Michael
Ormiston, Martha Isabel
Parker, Reginald Arthur
Paul, George Augustus
Poate, Hugh Raymond Guy
Pridham, Harold Ernest
Quaife, Cyril
Renwick, Charles Saunders
Riley, Spencer Birkenhead, B.A.

† Not passing through the regular course.

Rutledge, Edward Hamilton
Schlink, Herbert Henry
Sheehy, William
Shellshear, Joseph Lexten
Steele, Andrew Buchanan
Stacy, Valentine Osborne
Stokes, Frank Oliver
Vickers, Wilfred
Walker-Smith, Hugh Bell
White, Wilfrid James
Withers, Oswald Edgar Bruce

DENTISTRY.

FIRST YEAR.

Campion, Rowland Burnell
Hawkins, Ernest Vale
Jones, Richard John Edward Victor
King, Norman Stevens
Logan, Carl Denison
McElhone, George Hill
Murphy, Claude Vincent
Noble, Harold Ewens
Traill, Francis Windeyer
Walker, John Albert Basil

SECOND YEAR.

Anderson, Edward Sinclair
Atwill, Milton Spencer
Byers, William Ernest
Callaghan, Auriol Albert
Cosgrove, John Irving
Hardwick, Frederick George
Richards, Samuel Alexander
Ruse, Byron Brace
Taylor, William Jason
Watson, Edward Oliver

THIRD YEAR.

Broughton, Frank William Walford
Burne, Alfred Dangar
Gattenhof, William Vincent
Hicks, Harold Frank
Lane, Alan Philip Reade
Marshall, William Henry

FOURTH YEAR.

Capper, Lisle Hyne
Cozens, George Charles, L.D.S.
Deck, Norman Cathcart
Grosse, Edward Henry, L.D.S.
Kirchner, Edward Ravane, L.D.S.
Love, William Arnold
Pridham, Edward, L.D.S.
Punch, James Steenson, L.D.S.
Riley, Edwin Blomfield Gerard, L.D.S.
Starkey, William Augustus, L.D.S.

PHARMACY.

Apps, Claude
Arnott, David Millie
Ballhausen, Louis William
Bluett, Cecil
Brice-Beard, Harry Laing
Brown, Leslie C. B.
Browne, Edgar
Burgess, Thomas Montague
Carroll, Arthur Sidney
Cowell, Norman George Gordon
Davis, Stanley Joseph
Derrett, Harry E.
Dodd, William Percy
Ellis, James Eccles
Evans, Stanley Hubert
Fitzpatrick, Edwin Walter
Foster, Phillipe George Hamilton
Farley, Samuel James
Geary, John Joseph
Gleeson, John Francis
Hannah, Leslie Thompson
Harris, George
Harvey, Stanley Wycliffe
Hislop, George Randolph
Hittmann, Reginald Leslie
Lean, Harry Cecil
Little, F. W.
Lloyd, Augustus Picton
Meldrum, James Martin
McBride, Hugh Robert
Middleton, Wilmot Sidgewick
Moon, Albert

Mooy, Frederic
Newth, Adrian Hastings
Nicholas, George Ernest
Pope, Rex Howard
Porter, Alexander
Renwick, Howard Russell
Ritchie, Oliver James
Rose, Harry Clifford
Rowe, Claude Coleman
Saunders, Arthur William
Sisca, Luigi Carmini Natale
Siviter, Henry
Short, Archibald Gordon
Sleeman, James Edward
Sone, Charles
Stewart, Thomas Ralph
Tanner, Lewis Albert
Townley, Leslie John
Vesper, John Peter
Vincent, Ernest George
Wall, W. J.
Wallace, Frederick Finlay
Webb, Ernest Charles
West, Frank Victor
Weymouth, Alma
Whittell, Frederick James Clarendon
Wilson, John Kerr

FACULTY OF SCIENCE.

FIRST YEAR.

Booth, Frederic Athol
Buckley, Emma Albani
Carment, David Shallard
Cohen, Fanny
Cotton, Carl Max
Griffiths, Edward
Hunter, John George
Kesteven, Hereward Leighton
Lloyd, Arthur Crawley
Lyons, Richard John
*Shellshear, Edith M.
†Vaughan, Emert Frederick

SECOND YEAR.

Bateman, John Edwin
Breakwell, Ernest
Cotton, Leo Alexander
Deer, Margaret
Edwards, Rowland Campbell
Farran-Ridge, Clive
George, Sydney
Lyons, Richard Jenkins, B.A.
Sherring, Beatrice Alice
Watkins, Herbert Lance, B.A.

THIRD YEAR.

Armstrong, Harriet Ethel Mary
Benson, William Noel
Bonney, Reginald Schofield, B.A.
Flynn, Theodore Thomson
Free, Mary Grace
Hammond, Walter Leslie
Johnston, Thomas Harvey, B.A.
Mackinnon, Ewen
Meldrum, Henry John
Paul, Alfred
*Perry, Ernest Arthur
Webb, Sydney Douglas
Wellisch, Edward Montogue, M.A.
White, Charles Josiah

ENGINEERING.

FIRST YEAR.

Clayton, Horace Edward
Downie, Roy
Fry, Harold Willoughby
Henry, Clifford
Haigh, Victor Arnold
Herbert, Douglas Phillips
*Horsburgh, William Wallace
Lane, John Bayley
Lloyd, Arthur Sydney
McKeown, Eric Waverley
McLennon, William Munro
Miller, Horace Richard
Norman, Edwin Philip
Phippard, Frederick George
Reynolds, Lionel John
Smith, Reginald George

* Unmatriculated.

See, Harry Clarence Matthews
Stokes, Sydney William
Sachs, Walter John
Williams, Owen Beresford
Wright, Charles Edward

SECOND YEAR.

Civil Engineering.

Cowdery, George Edric
Frew, Alison Eavis Harding

Mining and Metallurgy.

Bedford, Max Ehrensvard
Butler, Angus Leicester
Coward, William Beresford
Forrest, William Tyler
Howatson, George
McBryde, James
MacPhillamy, Mowbray Charles
Morris, Albert Colin
Morrison, Archibald
Mort, John Laidley
Mulligan, Edric Noel
Niall, Kenneth Mansfield
Roe, Charles William
Sewell, Leonard Greville
Waterhouse, Leslie Vickery
Waterhouse, Lionel Lawry

Mechanical and Electrical.

Ada, William Leslie
Bundock, Arthur William
Carleton, George Brabazon
Carter, Edward Moore
Clift, Guy Chalmers
Davidson, George Frederick
Edgley, Harold Day
Mathews, William Washington
Ranclaud, Archibald Boscawen Boyd
Roberts, Harold Ashfield
Royle, John McDiarmid
Wardrop, Robert Davidson

THIRD YEAR.

Civil Engineering.

Donkin, William Dalkeith
†Searl, Harry Foster

Mining and Metallurgy.

Atkinson, John
Johnson, Norman Russell
Lempriere, Oscar Louden
*McIntyre, William Keveral
Taylor. Thomas Griffith, B.Sc.
Walker, John Stuart Dight
Waugh, Keith Cameron

Mechanical and Electrical.

Burnell, John Gurner
Carter, Herbert Gordon
Dennis, Spencer
Ireland, Oscar Arthur
May, Hubert Walter
Power, Reginald
Sharp, Lewis Hey
†Swain, Herbert John
Thompson, Harold Lindsay

FOURTH YEAR.

Mechanical and Electrical.

Clayton, Frank Herbert
Flashman, Horace West
Jones, Stephen William
Larkins, Harold Matthews
Norman, John Lupton
Prescott, William Arnold
†Price, Aubrey Leigh
Tivey, John Proctor, B.A.

RESEARCH SCHOLAR.

Jensen, Harold Ingemann, B.Sc.

* Unmatriculated. † Not passing through the regular course.

AFFILIATED COLLEGES.

By the Act 18 Victoria, No. 37, superseded by Act 64 Victoria, No. 22, provision is made for the Foundation of COLLEGES within the University in connection with the various religious denominations, in which students of the University may enjoy the advantages of residence, instruction in the doctrine and discipline of their respective Churches, and tuition supplementary to the lectures of the University Professors.

No student can be admitted to any such College unless he immediately matriculates in the University, submits to its discipline, and attends the statutory lectures; nor can he continue a member of the College longer than his name remains upon the University books.

ST. PAUL'S COLLEGE.

Incorporated by an Act 18 Victoria, in connection with the Church of England. In the terms of the Act the Visitor is the Archbishop of Sydney. The Corporation consists of a Warden, who must be in Priests' Orders, and eighteen Fellows, six of whom must be in Priests' Orders, and the remainder must be laymen. The Fellows, with the Warden, form the Council in which the Government of the College is vested.

VISITOR.

THE LORD ARCHBISHOP OF SYDNEY.

WARDEN.

The Rev. Canon William Hey Sharp, M.A., TH. SOC.

SUB-WARDEN.

E. A. Brearley, B.A.

LECTURERS.

Classics—N. de Horne Rowland, B.A., LL.B.
Mathematics—E. A. Brearley, B.A.
Philosophy—G. V. Portus, B.A.
French—W. H. W. Nicholls, B.A.

BURSAR.

F. B. Wilkinson, M.A.

FELLOWS.

Ashton, Hon. J., M.L.A.
Backhouse, His Hon. Judge, M.A.
Carr Smith, Rev. W. I.
Champion, Rev. A. H., M.A.
Chisholm, W., M.D.
Corlette, C. E., M.D.
Flower, Rev. W., M.A.
Günther, Ven. Archdeacon, M.A.
Hodges, C. H., M.A.
Norton, Hon. J., M.L.C., LL.D.
Peden, J. B., B.A., LL.B.
Russell, F. A. A., M.A.
Taylor-Young, H. C., M.D.
Uther, A. H., B.A., LL.B.
Weigall, A. B., M.A.
Wilkinson, F. B., M.A., Bursar
Vacant
Vacant

GRADUATES.

(Continuing on the Books.)

M.A.

Stephen, C. B.
Faithfull, W. P.
Purves, J. M.
Faithfull, H. M.
Pring, Mr. Justice R. D.
Powell, T.
Dawson, A. F.
Taylor, Rev. H. W.
Campbell, Ven. J.
Hills, H.
Russell, F. A. A.
Millard, G. W.
Perkins, Rev. F. T.
Abbott, Ven. T. K.
Chambers, Rev. G. A.

B.A.

Sharpe, E.
Blacket, A. R.
Noake, Rev. R.
Bundock, F. F.
Buckland, T.
Elder, Rev. F. R.
Bundock, C. W.
Feez, A.
Tange, C.
Morrish, Rev. Canon F.
Piddington, A. B.
Baylis, H. M.
Street, P. W.
Merewether, E. A. M.
Clarke, Rev. F. W.
Millard, A. C.
Jenkins, Rev. C. J.
Woodd, Rev. H. A.
Bode, Very Rev. A. G. H.
Britten, H. E.
Newton, Rev. H.
D'Arcy-Irvine, M. M.
McIntosh, H.
Roseby, T. E.
Blacket, Rev. C.
Uther, A. H.
Stephen, E. M.
Doak, F. W.
Windeyer, R.
Russell, C. T.
Peden, J. B.
Helsham, C. H.
Tighe, W.
Williams, J. L.
Abbott, H. P.
Dove, W. N.
Dowe, Rev. P. W.
Thomas, Rev. R. W.
Waldron, T. W. K.
Merewether, H. H. M.
Cakebread, Rev. W. J.
Rowland, N. de H.
Merewether, W. D. M.
Holt, A. C.
Maxwell, H. F.
Barton, J. A'B. D.
Hobbs, E.
Blaxland, H. C.
Houison, Rev. S. J.
Gregson, W. H.
Pilcher, N. G. S.
Evans-Jones, D. P.
Brown, Rev. G. E.
Verge, J.
Stephen, H. M.
Mutton, I.
Rutherford, G. W.
Harris, Rev. R. A.
Gregson, E. J.
Slade, O. C.
Cranswick, G. H.
Docker, W. B.
Barry, D. R.
Manning, H. E.
Waddy, E. F.
Futter, V. S.
Portus, G. V.

LL.B.

Uther, A. H.
Waldron, T. W. K.
Tighe, W.
Peden, J. B.
Merewether, H. H. M.
Merewether, W. D. M.
Pilcher, N. G. S.
Rutherford, G. W.
Evans-Jones, D. P.
Slade, O. C.
Rowland, N. de H.

M.D.

Chisholm, W.

M.B. AND CH.M.

Armstrong, W. G.
Bancroft, P.
Hunt, C. L. W.
Millard, R. J.
Kater, N. W.
Ludowici, E.
Barton, J. A'B. D.
Stuckey, F. S.
Marsh, H. S.
Sharp, G. G.
Lethbridge, H. O.
Simpson, F. G. McN.
Verge, A.

B.E.

Merewether, E. A. M.
White, N. F.
McCrae, A. G.
Verge, J.

B.Sc.

Crane, J. T.
Stuckey, F. S.
Sharp, G. G.
Sharp, L. H.

STUDENTS.

Archdall, H. K.
Ash, F. L.
Barton, A. S. D.
Browning, R. H.
Bundock, H. C.
Butler, A. L.
Calow, P. F.
Consett-Stephen, M.
Downie, R.
Dunlop, L. W.
Forrest, W. T.
French, B. R.
Garnock, R. C. D.
Hudson, J. M.
Ireland, O. A.
Lindeman, G. B.
Macartney, G. W.
McKeown, F. M.
Metcalfe, J. B.
Nathan, G. G.
Niall, K. M.
Norman, K. D.
Oatley, D. F. W.
Rawson, H. W. H.
Read, T. W. V.
Ritchie, H. J.
Rogers, F. C.
Rutledge, E. H.
Sharp, L. H., B.Sc.
Sharp, P. J.
Tooth, F.
Verge, C. A.
Waddy, R. G.
Waley, R. G. K.
Watt, H. C.

ENDOWMENTS AND PRIZES.

A.—Open Scholarships.

(1) The Kemp.—Principal, £400. Founded by the late Mrs. C. Kemp in memory of her husband, the Rev. C. Kemp.

(2) The Edward Aspinall.—Principal, £500.

(3) The Canon Stephen.—Principal, £761. Founded by subscription in memory of the late Rev. Canon Alfred H. Stephen.

The Kemp, Edward Aspinall and Canon Stephen Scholarships are awarded respectively to a student commencing the first, second or third year after his matriculation in the University. To be eligible for one of the above Scholarships the candidate must have taken at least second class honours at matriculation, or at the end of his first or second year after matriculation, as the case may be. If a student in one of the other Faculties, and

of the requisite standing from matriculation, shall have taken honours or distinctions which in the opinion of the Council are higher than those of any corresponding candidate in the Faculty of Arts, the Scholarship will be awarded to him. In case of equality a candidate in the Faculty of Arts will have preference.

B.—THE BURTON EXHIBITION.

This Exhibition is awarded to a student proceeding from the King's School to St. Paul's College. It is tenable for three years, the value not exceeding £40 per annum. The holder is required to produce at the end of each term a certificate of residence in College, and of good conduct, signed by the Warden.

C.—FOUNDATIONS FOR RESIDENT STUDENTS WHO INTEND TO TAKE HOLY ORDERS.

(1) THE AUGUSTA PRIDDLE MEMORIAL.—Principal, £600. Founded by the late Rev. C. F. D. Priddle. Tenable for three years by the son of a clergyman licensed in New South Wales.

(2) THE STARLING.—Principal, £1100.

(3) THE HENRY WILLIAM ABBOTT. — Principal, £1000. Founded by the late T. K. Abbott, Esq.

D.—THE MITCHELL PRIZE.

This Prize was founded by the late Hon. James Mitchell, and is awarded to the Bachelor of Arts of the College who shall, within twelve months after taking that Degree, pass the best examination (of sufficient merit) in the Doctrines and History of the Church of England.

A PROSPECTUS giving further information may be obtained on application to the Warden.

ST. JOHN'S COLLEGE.

Incorporated by Act 21 Victoria, in connection with the Roman Catholic Church. In the terms of the Act, the Visitor is the Roman Catholic Archbishop of Sydney. The Corporation consists of a Rector (who must be a duly approved Priest), and eighteen Fellows, of whom six must be duly approved Priests, and twelve Laymen. These eighteen Fellows, with the Rector, form the Council, in which the government of the College is vested.

VISITOR.

THE ROMAN CATHOLIC ARCHBISHOP OF SYDNEY.

1894—His Eminence Cardinal Moran.

THE PRESENT SOCIETY.

RECTOR.

The Right Rev. Monsignor O'Brien.

FELLOWS.

Butler, F. J., B.A.
Coffey, F. L. V., B.A., LL.B.
Donovan, J., K.C.S.G., LL.D.
Fitzgerald, Rev. T. A., O.F.M.
Flannery, G., B.A., LL.B.
Flynn, J. E., M.A.
Freehill, F. B., M.A.
Gallagher, Right Rev. J.
Ginisty, Rev. A.
Heydon, Judge
Maher, W. Odillo, M.D.
Manning, Sir W. P.
McEvilly, U., B.A.
Mort, Laidley
Moynagh, Rev. J.
Mullins, J. L., M.A.
Sheehy, The Very Rev. Dr., V.G.
Slattery, Very Rev. P. A.

M.D.

Maher, W. Odillo.

M.B., CH.M.

Blaney, H. P.
Coen, J.
Connolly, T. P.
Crawley, A. J. C.
Elworthy, W. H.
Fitzpatrick, E. B.
Godsall, R.
McKelvey, J. L.
Newell, B. A.
Veech, M.

M.B.

Durack, W. J.
Lister, H.
Marsden, E. A.

B.Sc.

Leverrier, F.

MINING—B.E.

Garry, J. J. P.

LL.D.

Coghlan, C. A.

LL.B.

Coffey, F. L. V.
Fahey, B. F.
Edmunds, W.
Lehane, T. J.
O'Donohue, J. P. M.
Tole, J. A.
Veech, L.
Watt, A. R. J.

M.A.

Brennan, F. P.
Coghlan, C. A.
Clune, M. J.
Dalton, G. T.
Flynn, J. E.
Flynn, J. A.
Freehill, F. B.
Healy, P. J.
Mullins, J. L.
O'Connor, Richard E
O'Mara, M.
Quirk, Rev. D. P.
Walsh, W. M. J.

B.A.

Browne, W. C.	Higgins, M. A.	Meagher, L. F.
Butler, T.	Kelly, T.	Meillon, J.
Butler, F. J.	Kenna, P. J.	Moloney, T. P.
Carroll, W. J.	Leverrier, F.	Morris, J. M.
Callachor, Rev. H. B.	Leahy, J. P.	O'Brien, P. D.
Casey, M.	Lehane, T. J.	O'Donohue, J. P. M.
Coen, F.	Lynch, W.	O'Keefe, J. A.
Connellan, J.	Lloyd, T.	Phillips, R. B.
Corbett, W. F.	Macnamara, P. B.	Power, P. H.
Coffey, F. L. V.	Macrossan, H. D.	Real, E. T.
Cullinane, J. A.	McNevin, T.	Sheridan, F. B.
Daley, F. H.	Maher, M. E.	Shorthill, J. R.
Douglass, R. J.	Maher, C. H.	Sullivan, H.
Durack, J. J. E.	Mayne, J.	Sullivan, J. J.
Enright, W. J.	Mayne, W. M.	Swanson, E. C.
Fahey, B. F.	McDonagh, J.	Tole, J. A.
Flynn, W. F.	McEvilly, A.	Veech, L. S.
Fitzpatrick, T. J. A.	McEvilly, U.	Watt, A. R. J.
Gorman, J. R.	McGuinn, D.	Walsh, J. J.

UNDERGRADUATES.

Barron, T. P.	Fitz-Herbert, R.	Murphy, J. J.
Carroll, W. J., B.A.	Haynes, A. R.	O'Halloran, C. M.
Coen, B.	Logan, C. D.	Power, R.
Coen, F., B.A.	Luddy, J.	Real, E. T.
Duffy, W.	Maher, C. H.	Schlink, R. H.
Farrelly, J.	Moore, E. B.	Veech, M. S.

LECTURERS.

Sacred Scripture	The Rev. the Rector
Logic and Geology	Rev. L. Murphy, S. J.
Classics	J. Carlos, B.A.
Mathematics	H. de B. O'Reilly, B.A.

ENDOWMENTS AND PRIZES.

The O'Connell Scholarship (value £40).—Open for competition to resident students who have newly matriculated in 1879 and the years following. (Subscribers—Sir P. A. Jennings, K.C.M.G., and others.) The origin of this Scholarship was the O'Connell Centenary Celebration.

1906—Fitz-Herbert, R.

ST. ANDREW'S COLLEGE.

Incorporated by Act of Parliament, 31 Victoria, in connection with the Presbyterian Church of New South Wales. The Moderator for the time being of the General Assembly of the

Presbyterian Church is Visitor. The Corporation consists of a Principal, who must be a duly ordained Presbyterian Minister, holding and prepared to subscribe (when called upon to do so) the standards of the Presbyterian Church of New South Wales, and twelve Councillors, of whom four, but not more, must be ordained Ministers of the same Church. These twelve Councillors, with the Principal, form the Council, in which the government of the College is vested.

VISITOR.

THE MODERATOR OF THE GENERAL ASSEMBLY.
The Right Rev. J. Kemp Bruce.

PRINCIPAL.

The Rev. Andrew Harper, M.A. (Melb.), D.D. (Edin.)

VICE-PRINCIPAL.

Wyndham J. E. Davies, B.A., LL.B.

HUNTER-BAILLIE PROFESSORS.

ENGLISH LANGUAGE AND LITERATURE (IN RELATION TO RELIGION)—J. Kinross, B.A., D.D.

ORIENTAL AND POLYNESIAN LANGUAGES—Andrew Harper, M.A., D.D.

LECTURERS.

Philosophy	The Principal.
English	The Principal.
Mathematics	The Vice-Principal.
Classics	G. W. Waddell, M.A., LL.D.
Science..	S. J. Johnston, B.A., B.Sc.
Medicine	H. S. Stacy, M.D., Ch.M.
Law	G. W. Waddell, M.A., LL.D.

HON. TREASURER.
Senator J. T. Walker.

SECRETARY.
William Wood.

COUNCILLORS.

Bowman, Arthur, B.A.
Bowman, E., M.A., LL.B.
Bruce, Rev. D., D.D.
Campbell, John
Clouston, Rev. T. E., B.A., D.D.
Ferguson, Rev. John
Fuller, Hon. G. W., M.A., M.H.R.
Garland, John, M.A., LL.B.
Goodlet, John Hay
Hay, John, LL.D.
Macintyre, Rev. R. G., M.A., B.D.
Walker, J. T., Senator

TRUSTEES.

Anderson, H. C. L., M.A.
MacLaurin, Hon. Sir Normand, M.D., LL.D.
Bowman, Arthur, B.A.
Thomson, The Hon. Dugald, M.P.
Walker, J. T., Senator

M.A.

Anderson, H. C. L.
Cohen, J. J.
Crawford, T. S.
Cribb, J. G.
Flint, C. A.
Fuller, G. W.
Gill, A. C.
Hill, Rev. Thomas
Jackson, Rev. R.
Kay, Rev. Robert
Mann, W. J. G.
Marrack, J. R. M.
Merrington, E. N.
Moore, S.
Nolan, J. H. M.
Perkins, A. E.
Ralston, A. G.
Rygate, P. W.
Smairl, J. H.
Steel, Rev. Robert
Teece, R. Clive
Teece, R. N.
Thompson, J. A.
Waddell, G. W.
Waugh, Rev. Robert

M.B. AND CH.M.

Aspinall, A.
Blue, A. J.
Bond, L. W.
Browne, C. S.
Cameron, D. A.
Davidson, Leslie G.
Davies, R. L.
Dick, Robert
Freshney, Reginald
Griffiths, F. G., B.A.
Griffiths, J. N.
Henderson, J.
Jones, P. Sydney
King, A. A.
Kinross, R. M.
Lightoller, G. H. S.
MacDowall, St. A. W.
MacDowall, V.
Phillips, A. B.
Perkins, A. E.
Purser, C.
Roberts, A. S. C.
Savage, Vincent W
Sheppard, A. M.
Stokes, Edward S.
Thomson, J. M.
Townley, Percy L.
Whiteman, R. J. N.

LL.D.

G. W. Waddell, M.A.

LL.B.

Edwards, D. S.
Gill, A. C.
Parker, W. A.
Teece, R. N.
Teece, R. C.
Tozer, S. D.
Walker, J. E.

B.A.

Anderson, Rev. W. A. S.
Auld, Rev. J. H. G.
Barnet, Rev. Donald
Barton, W. A.
Beegling, D. H.
Bowman, Alister S.
Bowman, Arthur
Bowman, Ernest
Campbell, C. R.
Cameron, Rev. A. P.
Copland, F. F.
Cosh, Rev. J., B.D.
Craig, A. D.
Crane, Rev. C.
Dettmann, H. S.
Dick, J. A.
Dick, W. T.
Doig, Rev. A. J.
Dudley, J. T.
Edwards, D. S.
Edwards, E. E.
Edwards, Rev. J.
Elphinstone, James
Gordon, Rev. G. A.
Griffiths, F. G.
Halliday, G. C.
Henderson, R. G.
Hope, P.
Hunt, Harold W. G.
Hunter, T. B.
Jamieson, S.
Johnston, J.
Kinross, R. M.
Linsley, W. H.
Lyon, Pearson
MacCallum, M. L.
McCook, Rev. A. S.
Mackay, I. G.
McKie, E. N.
McLelland, Hugh
McManamey, James F.
McNeil, A.
Manning, R. K.
Miller, Rev. R.
Moore, J.
Mowbray, R. W.
Munro, W. J.
Nelson, D. J.
Paine, Bennington H.
Parker, W. A.
Paterson, J.
Perkins, Rev. J. A. R.
Perské, H.
Poidevin, L. O. S.
Pope, Roland J.
Powell, J. W. G.
Prentice, A. J.
Purser, Cecil
Quigley, J.
Ramsay, J.
Robson, R. N.
Rogers, P. H.
Rygate, C. D. H.
Rygate, H. B.
Shand, A. B.
Sheppard, E. H.

Somerville, G. B.
Stacy, F. S.
Swanwick, K. ff.
Thorburn, Rev. J. T.
Townley, Percy L.
Tozer, S. D.
Walker, J. E.
Walker, S. H.
Webb, M. B. L.
White, Rev. C. A
Whitfeld, H. E.
Woodward, F. P.

M.E.

Bradfield, John J. C.

B.E.

Bowman, Archer
Cameron, C. B.
Craig, A. D., B.A.
Freeman, A. W., B.A.
Jack, R. L.
Owen, T. M.
Rowlands, H. B.
Stanley, F. V.
Webb, S. D.
Whitfeld, H. E.

STUDENTS IN RESIDENCE.

Aspinall, A. J.
Bourne, H. T.
Callaghan, A. A.
Carter, E. M.
Carter, H. G.
Castlehow, S.
Chapman, B. B.
Cranston, G.
Dixson, T. S.
Ducker, N. G.
Edgley, H. D.
Gibson, J. C.
Haigh, V.
Heaslop, J. W.
Hertzberg, W. M.
James, J. A.
Jones, S. E.
Kay, E.
Kennedy, H. M.
Lane, J. B.
MacCarron, R. G.
McGill, A. D.
McKenzie, Arthur J.
McKie, E. N.
McLennan, S.
McPhillamy, M. C.
Macintosh, A. M.
Markwell, N. W.
Meeks, H. G.
Mellor, E. J.
Minter, C.
Nimmo, W. N.
Mollison, A.
Pitt, C. N.
Robertson, J. H., M.A.
Sampson, G. A.
Scott, H.
Scott, F.
Stafford, A. L.
Stafford, H. L.
Stewart, W. T.
Thomson, E. G.
Vickers, L.
Walker, A. D.
Walker, E. B.
Walker, J.
Webb, S. D., B.E.
Williams, O. B.
Yarnall, F. E.
Yarnall, G. W.

NON-RESIDENT STUDENTS.

Ferguson, E. A.
Malcolmson, J. A.

ENDOWMENTS AND PRIZES.

I.—SCHOLARSHIPS.

1. Bowman Scholarship.—A sum of £1000 was bequeathed in 1873 by the late Robert Bowman, Esq., M.D., of Richmond, for the foundation of a Scholarship.

1906—E. N. McKie, B.A.

2. Frazer Scholarship.—In 1884, a sum of £1000 was bequeathed by the late Hon. John Frazer, M.L.C., for a Scholarship.

1906—L. Vickers (2nd Arts)

3. The Gordon Scholarship.—A sum of £1000 was given in 1882, by the late S. D. Gordon, Esq., M.L.C., for the foundation of a Scholarship for students who have taken the B.A. Degree, or first class in Classics.

1906—H. G. Carter (3rd Eng.)
S. Castlehow (2nd Arts)
G. A. Sampson (3rd Med.)
W. P. Stewart (3rd Arts)

4. The Lawson Scholarship.—A sum of £1000 (in bank shares) was bequeathed in 1882, by the late George Lawson, Esq., of Yass, for the foundation of a Scholarship for students who have taken the B.A. Degree.

1906—A. Walker (1st Arts)

5. The Struth Scholarship.—A sum of £1000 was given in 1884, by J. Struth, Esq., for the foundation of a Scholarship.

1906—J. A. James (1st Arts)
H. G. Meeks (1st Art)

6. The Horn Scholarships.—In 1883, the late Mr. John W. Horn, of Corstorphine, Edinburgh, bequeathed eighty shares of the A. G. Co., to found three Scholarships.

1906—B. B. Chapman (2nd Arts)
A. D. McGill (2nd Arts)

7. The Coutts Scholarship.—In 1884, the sum of £1000 was bequeathed by the late Rev. James Coutts, M.A., of Newcastle, for the foundation of a Scholarship. A student of the name of Coutts to have preference.

1906—S. E. Jones (1st Arts)
E. B. Walker (1st Arts)

8. The late Rev. Colin Stewart, M.A., in 1886, bequeathed his property to the College in trust for (among other objects) the founding of Scholarships.

1906—J. H. Robertson, M.A.

II.—PRIZES.

1. The Dean Prize.—A sum of £100 was given in 1879, by Alexander Dean, Esq., for the foundation of an Annual Prize for General Excellence.

2. The Jarvie Hood Prize.

3. Frazer Prize of £25, for Modern History.

1891—Parker, W. A.	1894—C. A. White
1892—A. C. Gill, J. E. Walker } æq.	1895—A. J. Doig, G. W. Waddell } æq.
1893—A. C. Gill, J. E. Walker	F. G. Griffiths (2nd)

Of the above Scholarships, the Frazer, one Gordon, and the Lawson are restricted to students for the Ministry of the Presbyterian Church. A first class at the University Examinations is a necessary qualification for the Gordon, but not for any of the other Scholarships.

THE WOMEN'S COLLEGE.

Incorporated by Act 53 Vict., No. 10, and not attached to any religious denomination. In the terms of the Act the Visitor is the Chancellor of the University, or in his absence the Vice-Chancellor. The Corporation consists of the Principal, who must be a woman, and twelve elected Councillors, of whom four at least must be women, and two *ex-officio* Councillors, nominated by the Senate of the University. The Councillors, with the Principal, form the Council in which the government of the College is vested.

According to the Act of Incorporation, the Women's College is a College within the University of Sydney, wherein may be afforded residence and domestic supervision for women students of the University, with efficient tutorial assistance in their preparation for the University Lectures and Examinations. All students in the College not already matriculated shall, as soon as shall be practicable, matriculate in the University, and shall thereafter be required duly to attend the lectures of the University in those subjects, an examination and proficiency in which are required for Degrees, with the exception, if thought fit by any such student, of the Lectures on Ethics, Metaphysics, and Modern History.

The Women's College is strictly undenominational, the Act of Incorporation providing "That no religious catechism or formulary which is distinctive of any particular denomination shall be taught, and no attempt shall be made to attach students to any particular denomination, and that any student shall be

excused from attendance upon religious instruction or religious observances on express declaration that she has conscientious objections thereto."

The College fees are as follow :—

Resident Students.—£21 for each University Lecture Term, with £2 2s. a week for residence during vacation.

The fee of £21 for the Lecture Term covers all College dues, including fire and light.

The Council provides all necessary furniture, but each student may arrange and add to the furniture in her room as she pleases.

Non-Resident Students.—Term fee, £4 4s., or £12 12s. per annum.

VISITOR.

THE CHANCELLOR OF THE UNIVERSITY.

PRINCIPAL.

Miss L. Macdonald. M.A. (London).

COUNCILLORS.

Anderson, H. C. L., M.A. (*ex officio*)
Barff, Mrs., M.A.
Cohen, Mrs. G.
Cullen, Hon. W. P., LL.D. (*ex officio*)
Fairfax, Miss
Fairfax, G. E.
Kater, Mrs. H. E.
Macdonald, Miss, M.A. (*Principal*)
McMillan, Sir W., K.C.M.G.
Owen, Mrs. Langer
Rich, G. E., M.A., *Hon. Secretary.*
Stuart, Prof. Anderson, M.D., LL.D.
Walker, Senator J. T. (*Chairman and Hon. Treasurer*)
Woolley, Miss

M.A.

Cribb, Estelle
Cordingley, Grace
Fitzhardinge, Maude Y.
Jensen, Clio
Lance, E. A.
Wark, F. H.

B.A.

Armstrong, H. D.
Armstrong, I. B. H.
Ashton (*née* Anderson), Maud E.
Bourne, Ida (in residence)
Brownlie, E. A. D.
Brownlie, E. A.
Clark, M. D.
Curren, Ethel
Dawes, M. M.
Dunnicliff, Mary C.
Fell, C. I.
Fitzhardinge, J.
Harker, Constance E.
Hill, Evelyn M.
Holt, Edith
Montefiore, Hortense H.
Read, Elizabeth J.
Roseby, Minnie
Rutherford, F. M.
Rutherford, C. M. (in residence)
Saunders, E. F.
Skillman, Jessie
Stephenson, A. L.
Uther, J. B.
Watson, Eleanor
Wilson, G. L.
Wilkinson, I. B.
Wood (*née* Whitfeld), Eleanor M.

M.B. AND CH.M.

Aspinall, J.	Bourne, E. E.	Thomson, J. G.
Binney, C. C	Greenham, Eleanor C.	White, M I.

B.Sc

White (*née* Horton), Marion C.

UNDERGRADUATES IN RESIDENCE.

Adams, Edith	Little, E. M.	Parnell, E. C.
Bowman, M.	Maclean, A.	Perry, Irene
Child, S. R.	Macdonald, F. A.	Ramsay. M.
Densley, N.	Murray-Prior, M.	Smith, C. R.
Dunlop, M. L. T.	Noad, E. A.	Stokes, M. E.
Jones, Grace E.	Norris, Mabel	Wark, Gertrude
Lion, Rosine	Ormiston, Isabel	

NON-MATRICULATED STUDENTS IN RESIDENCE.

Reid, Amy	Watkins, Dorothy

EXHIBITIONS.

The Walker Exhibition.—An Exhibition of the value of £25, presented by Mrs. J. T. Walker, given to the student who on entering the College shows evidence of the highest attainments, provided that no student shall be eligible for the Exhibition unless she shall make it appear to the satisfaction of the Principal that she cannot, without such assistance, pay the expenses of residence in the College.

1892—Harker, Constance E.	1894—Saunders, Eva Florence
1893—Montefiore, H. H.	1895—De Lissa, Ethel N.

GRACE FRAZER SCHOLARSHIP.

The Grace Frazer Scholarship, of the value of £30 (being the interest of £1000 invested in New South Wales Government Funded Stock), presented by Mrs. C. B. Fairfax, in memory of her late sister. Awarded upon conditions settled from time to time by the Council, but hitherto tenable for three years.

1892—Whitfeld, Eleanor Madeline	1901—Not awarded.
1895—Lance, Elisabeth A.	1902—Skillman, Jessie
1898—Armstrong, Ina Beatrice H.	1905—Maclean, A.
1899—Armstrong, H. D. H.	1906—Maclean, A.
1900—Murray-Prior, D. K.	

COUNCILLORS' SCHOLARSHIPS.

Two Scholarships, of £25 each, tenable for one year, presented by the Councillors, were awarded in Lent Term, 1893, on the results of the University Examinations.

1893—Harker, C. E.
Broad, A. W.

One Scholarship, of £25, tenable for one year, awarded on the same terms as the Walker Exhibition.

1895—Saunders, Eva F.
1896—Dunnicliff, Mary
1897—Read, E. J.
1898—Bourne, Eleanor
1899—Stephenson, A. L.
1900—Brownlie, E. A.
1901—Saunders, F. L.
1903—Curren, Ethel
1904—Clark, M. D.
1905—Jones, Grace

A Scholarship, of the value of £50, tenable for one year, presented by Miss Walker, of Yaralla, given on similar terms to the Walker Exhibition.

1895—Dunnicliff, Mary
1896—Read, Elizabeth J.
1897—Bourne, Eleanor E.
1898—Divided between Holt, E. J. K., and Stephenson, A. L.
1899—Divided between Brownlie, E. A., and Loudon, B. W.
1900—Saunders, F. L.
1901—Mugliston, M.
1902—Divided between Curren, Ethel and Mugliston, M.
1903—Divided between Bourne, Ida, and Watson, Eleanor
1904—Jones, Grace E.
1905—Divided between Perry, Irene, and Smith, Clara R.
1906—Divided between Norris, Mabel and Smith, Clara R.

A Prize of Books to the value of £5, presented by the Kambala Girls' Union, on similar terms to the Walker Exhibition.

1898—Divided between Holt, E. J. K., and Stephenson, A. L.
1899—Loudon, B. W.
1900—Murray-Prior, D. K.
1901—Mugliston, M.
1902—Skillman, Jessie

A Prize of Books, presented by the Alliance Française.

White, M. I.

THE HOLT SCHOLARSHIP.

A Scholarship, of the value of £25, presented by Mrs. Holt, Parramatta, given on similar terms to the Walker Exhibition.

Clark, Marjorie D.

THE MARIE WALLIS MEMORIAL PRIZE FOR GERMAN.

A Prize of Books to the value of £2 12s., presented by the former students of "Ascham" to be awarded annually to the Second Year Student who does best in the German Honours Examinations.

THE LODGE SCHOLARSHIP.

A Scholarship, of the value of £30, for one year, presented by an anonymous donor, to be awarded in 1907 on similar terms to the Walker Exhibition.

ROYAL PRINCE ALFRED HOSPITAL.

Established and maintained in accordance with the provisions of the "Prince Alfred Hospital Act," 36 Vic., and the "Prince Alfred Memorial Hospital Site Dedication Act," 36 Vic., No. 28.

The Hospital was framed as a general Hospital and Medical School for the instruction of students attending the Sydney University, and for the training of nurses for the sick.

The design was adapted to the site dedicated to the Hospital by the Government, aided by the co-operation of the Sydney University.

The Hospital is managed by a Board of fifteen Directors. The Chancellor of the University and the Dean of the Faculty of Medicine are Directors *ex officio;* three Directors are appointed by the Government, and the remaining ten are elected by the Governors and subscribers.

The Medical Officers are all appointed by a conjoint Board, consisting of the Senate of the University and the Directors of the Hospital. This conjoint Board likewise makes the By-laws regulating the mode in which the students shall have access to, and the course of studies to be pursued in, the Hospital.

The University Lecturers in Medicine and Clinical Medicine are Honorary Physicians, the Lecturers in Surgery and Clinical Surgery are Honorary Surgeons, the Lecturer in Ophthalmic Medicine and Surgery is Honorary Ophthalmic Surgeon, and the Lecturer on Diseases of Women is Honorary Surgeon for Diseases of Women at the Royal Prince Alfred Hospital.

All Physicians and Assistant Physicians must be Graduates in Medicine of the University of Sydney, or of some University recognised by the University of Sydney.

All Surgeons and Assistant Surgeons must possess a Degree in Surgery, or a Surgeon's diploma from some University or College of Surgeons recognised by the University of Sydney.

Clinical Lectures are delivered in accordance with the University curriculum. All Honorary and Resident Medical Officers are required to give such Clinical instruction to the Medical students as may be directed by the Conjoint Board.

PATRONS:

H.M. the King.
H.M. the Queen.
H.R.H. the Prince of Wales.
H.R.H. the Princess of Wales.

DIRECTORS:

The Chancellor of the University of Sydney.
The Dean of the Faculty of Medicine (Chairman).

Sir James Fairfax
J. Russell French, Esq.
Moritz Gotthelf, Esq.
Senator the Hon. A. J. Gould
Sir James Graham, M.D.
The Hon. James Inglis
The Hon. H. E. Kater, M.L.C.
Sir P. Sydney Jones, M.D.
P. H. McArthur, Esq.
The Hon. C. K. Mackellar, M.B., M.L.C.
Dr. F. Antill Pockley
William Trotter, Esq.
Senator the Hon. J. T. Walker

Honorary Treasurer: The Hon. H. E. Kater.

Secretary: William Epps.

HONORARY CONSULTING PHYSICIAN.—Sir P. Sydney Jones, M.D. (Lond.).

HONORARY PHYSICIANS.—Robert Scot-Skirving, M.B., Ch.M. (Edin.); Cecil Purser, B.A., M.B., Ch.M. (Syd.); W. Camac Wilkinson, B.A., M.D.; G. E. Rennie, B.A., M.D., M.R.C.S. (Lond.).

HONORARY SURGEONS.—Alexander MacCormick, M.D., Ch.M. (Edin.), M.R.C.S. (Eng.); Charles P. B. Clubbe, L.R.C.P. (Lond.), M.R.C.S. (Eng.); H. V. C. Hinder, M.B., Ch.M. (Syd.); Chas. MacLaurin, M.B., Ch.M. (Edin.).

HONORARY GYNÆCOLOGICAL SURGEONS.—Jos. Foreman, L.R.C.P. (Edin.), M.R.C.S. (Eng.); Edward T. Thring, F.R.C.S. (Eng.), L.R.C.P. (Lond.).

HONORARY OPHTHALMIC SURGEON.—F. Antill Pockley, M.B. Ch.M. (Edin.), M.R.C.S. (Eng.).

HONORARY PHYSICIAN FOR DISEASES OF THE SKIN.—F. A. Bennet, M.A., M.D.

HONORARY SURGEON FOR DISEASES OF THE EAR, THROAT, AND NOSE.—George T. Hankins, M.R.C.S. (Eng.).

HONORARY MEDICAL OFFICER IN CHARGE OF THE LOCK DEPARTMENT.—W. J. Munro, B.A. (Syd.), M.D. (Edin.).

HONORARY MEDICAL OFFICER IN CHARGE OF THE MEDICAL GYMNASTICS DEPARTMENT.—Reuter E. Roth, M.R.C.S. (Eng.).

HONORARY ASSISTANT PHYSICIANS.—A. E. Mills, M.B., Ch.M. (Syd.); Sinclair Gillies, M.A., M.D. (Lond.); C. Bickerton Blackburn, B.A., M.D., Ch.M. (Syd.); E. W. Fairfax, M.B., Ch.M. (Syd.); J. I. C. Cosh, M.B., Ch.M. (Syd.), D.P.H. (Cantab.)

HONORARY ASSISTANT SURGEONS.—G. H. Abbott, B.A., M.B., Ch.M. (Syd.); R. Gordon Craig, M.B., Ch.M. (Syd.); J. Morton, M.B., Ch.M. (Syd.).

HONORARY ASSISTANT SURGEON, DISEASES OF WOMEN.—H. C. Taylor Young, M.D.; Fourness Barrington, M.B., M.S. (Edin.).

HONORARY ASSISTANT OPHTHALMIC SURGEONS.—H. Guy S. Warren, M.R.C.S. (Eng.), L.R.C.P. (Lond.); J. C. Halliday, M.B., Ch.M. (Syd.), D.P.H. (Cantab.).

HONORARY ASSISTANT SURGEON FOR DISEASES OF THE EAR, NOSE AND THROAT.—H. Russell Nolan, M.B., Ch.M.

HONORARY PATHOLOGIST.—Professor Welsh, M.A., B.Sc., M.D., M.R.C.P. (Edin.).

MEDICAL TUTOR.—George Edward Rennie, B.A., M.D. (Lond.).

SURGICAL TUTOR.—John Morton, M.B., Ch.M.

HONORARY SECRETARY OF THE MEDICAL BOARD.—A. E. Mills, M.B., Ch.M. (Syd.).

CHIEF RESIDENT MEDICAL OFFICER.—St. J. W. Dansey, M.B., Ch.M.

SENIOR RESIDENT MEDICAL OFFICERS.
- ANÆSTHETIST—J. K. McKelvey, M.B., Ch.M.
- REGISTRAR.—J. McEncroe, M.B., Ch.M.
- RESIDENT PATHOLOGIST.—P. E. W. Smith, M.B., Ch.M.
- RADIOGRAPHER.—A. S. C. Roberts, M.B., Ch.M.

JUNIOR RESIDENT MEDICAL OFFICERS.—T. C. Parkinson, M.B., Ch.M.; H. T. C. MacCulloch, M.B., Ch.M.; E. H. Molesworth, M.B., Ch.M.; J. B. St. V. Welch, M.B., Ch.M.; E. J. Day, M.B., Ch.M.; G. H. S. Lightoller; Jessie Aspinall, M.B., Ch.M.

ROYAL PRINCE ALFRED HOSPITAL.—MEDICAL SCHOOL.

Rules and Regulations for the Clinical Study and Training of the University Students of Medicine.

The Hospital shall be open to students for Clinical work from 9 a.m. to 5 p.m. throughout the year.

In order to obtain the certificate of hospital practice necessary to qualify for admission to the Final Examination for the Degrees of Bachelor of Medicine and Master in Surgery of the University of Sydney, students are required to pass through the hospital curriculum of study and practice in the various departments, according to the following scheme and time table of Clinical work.

The respective duties of all students, under the time table, shall be apportioned by the Medical Superintendent, and the necessary certificates will only be issued to those students who have shown punctuality, diligence, and efficiency in the performance of the duties assigned to them.

The Registrar shall report in writing to the Medical Superintendent each month as to the work done in his department by each Clinical Clerk and Surgical Dresser, and the Medical Superintendent shall obtain reports from the members of the Honorary and Resident Medical Staff concerning the character of the work done by the students under supervision.

The Medical Superintendent shall report to the House Committee upon the character of the work done by each fourth and fifth year student, at the first or second meeting after the end of each term.

Students attending the Hospital shall be arranged by the Medical Superintendent in four divisions in each year, A, B, C and D respectively, and a list of the names thus appointed to the various departments shall be hung up in the Board Room and the Entrance Hall of the Hospital.

The Hospital vacation shall be from the end of the third week in November to the commencement of the second week in January, during which time the Hospital shall be closed to students other than those under examination.

Clinical Work Table.

FOURTH YEAR.

Group.	Michaelmas Term.	Long Vacation Term.
A.	Casualty and Surgical Out Patients.	Surgical Ward Dressing.
B.	Surgical Ward Dressing.	Casualty and Surgical Out Patients.
C.	Surgical Ward Dressing.	Surgical Ward Dressing.
D.	Surgical Ward Dresssing.	Surgical Ward Dressing.

FOURTH YEAR—*continued.*

Group.	Lent Term.	Trinity Term.
A.	Surgical Ward Dressing.	Surgical Ward Dressing.
B.	Surgical Ward Dressing.	Surgical Ward Dressing.
C.	Casualty and Surgical Out Patients.	Surgical Ward Dressing.
D.	Surgical Ward Dressing.	Casualty and Surgical Out Patients.

FIFTH YEAR.

Group.	First Michaelmas Term.	Long Vacation Term.
A.	Clinical Clerkship, Medical Wards. Tutorial Medicine (Ward).	Clinical Clerkship, Medical Wards. Tutorial Medicine (Out Patients). Medical Out Patients' Attendance.
B.	Clinical Clerkship, Medical Wards Tutorial Medicine (Ward).	Clinical Clerkship, Medical Wards. Tutorial Medicine (Out Patients). Attend Gynæcological Out Patients. Attend Diseases of the Skin, Out Patients.
C.	Clinical Clerkship, Medical Wards. Tutorial Medicine (Out Patients).	Clinical Clerkship, Medical Wards. Tutorial Medicine (Wards). Clinical Clerkship, Gynæcological Wards.
D.	Clinical Clerkship, Medical Wards. Tutorial Medicine (Out Patients).	Clinical Clerkship, Medical Wards. Tutorial Medicine (Wards). Clinical Clerkship, Ophthalmic Wards. Attend Diseases of the Eye and Diseases of the Ear, Nose, and Throat (Out Patients).

Group.	Lent Term.	Trinity Term.
A.	Clinical Clerkship, Medical and Ophthalmic Wards. Attend Diseases of the Eye, and Diseases of the Ear, Nose, and Throat (Out Patients).	Clinical Clerkship, Medical and Gynæcological Wards.
B.	Clinical Clerkship, Medical Wards. Medical Out Patients' Attendance.	Clinical Clerkship, Medical and Ophthalmic Wards. Attend Diseases of the Eye and Diseases of the Ear, Nose, and Throat (Out Patients).
C.	Clinical Clerkship, Medical Wards. Attend Gynæcological, Out Patients. Attend Diseases of the Skin, Out Patients.	Clinical Clerkship, Medical Wards. Medical Out Patients' Attendance.
D.	Clinical Clerkship, Medical and Gynæcological Wards.	Clinical Clerkship, Medical Wards. Attend Gynæcological Out Patients. Attend Diseases of the Skin, Out Patients.

FIFTH YEAR—*continued.*

Group.	Second Michaelmas Term.
A	Attend Gynæcological Out Patients.
	Attend Diseases of the Skin, Out Patients.
B	Clinical Clerkship, Gynæcological Wards.
C	Clinical Clerkship, Ophthalmic Wards.
	Attend Diseases of the Eye, and Diseases of the Ear, Nose, and Throat Out Patients.
D	Medical Out Patients' Attendance.

It shall be the duty of each Clinical Clerk to take the history of every patient admitted to the beds placed under his charge within forty-eight hours of admission, and to make all needful periodical reports upon the progress, symptoms, treatment, and results of each case.

It shall be the duty of each Surgical Dresser to take the history of every patient under his charge within twenty-four hours of admission, and to make all needful periodical reports upon the progress, symptoms, treatment and results of each case.

OTHER HOSPITALS

RECOGNISED BY THE UNIVERSITY AS PLACES WHERE STUDY MAY BE CARRIED ON IN CONNECTION WITH THE FACULTY OF MEDICINE.

THE SYDNEY HOSPITAL.
ST. VINCENT'S HOSPITAL.
THE ROYAL HOSPITAL FOR WOMEN.
THE HOSPITAL FOR SICK CHILDREN.
THE GLADESVILLE HOSPITAL FOR THE INSANE.
THE CALLAN PARK HOSPITAL FOR THE INSANE.
THE WOMEN'S HOSPITAL.

UNITED DENTAL HOSPITAL OF SYDNEY.

This Hospital was established in 1901 for the purpose of providing dental attendance for persons unable to pay the fees of ordinary dentists, and also to provide facilities for the instruction of the students attending the University Dental School. The business of the Hospital is carried on in a building at the corner of George and Bathurst Streets, opposite St. Andrew's Cathedral. It amalgamated with the Dental Hospital of Sydney on June 1st, 1905.

The Hospital is open for the treatment of patients from 2 to 5 p.m. daily, Saturdays excepted.

The Honorary Dental Surgeons are appointed by the Hospital Board.

The University Lecturers in Surgical and Mechanical Dentistry are *ex officio* Honorary Dental Surgeons of the Hospital.

The fee payable by students for the dental practice of the Hospital is £7 7s. per annum.

PATRON.

His Excellency the Governor, Sir Harry Holdsworth Rawson, K.C.B.

EXECUTIVE.

PRESIDENT.

Dr. Randolph Magnus.

VICE-PRESIDENT.

H. C. L. Anderson.

TRUSTEES.

Dr. A. Burne | Mr. H. C. L. Anderson | Mr. H. Paterson

HON. TREASURER.

Mr. H. Paterson

HON. SECRETARY.

Mr. Donald Smith

COMMITTEE.

Appointed by the Senate of the University.	Elected by the Subscribers to the Hospital
Professor Anderson Stuart	Dr. R. Arthur
Mr. H. C. L. Anderson	Dr. E. R. Magnus
Professor D. A. Welsh	Dr. H. Peach
Dr. R. Fairfax Reading	Mr. H. Paterson
Dr. W. S. Hinder	Mr. E. K. Satchell
Dr. N. V. Pockley	Mr. Donald Smith

Hon. Solicitor—F. W. Walker | *Hon. Auditor*—David Fell, C.A.A.

Secretary—T. W. Shadforth

Honorary Medical Staff.

HONORARY PATHOLOGIST.

Professor D. A. Welsh, M.D.

HONORARY PHYSICIANS.

Dr. W. J. Munro
Dr. Gregory O'Neill
Dr. G. E. Rennie
Dr. Chisholm Ross
Dr. Scot Skirving
Dr. A. Murray Will

HONORARY SURGEONS.

Dr. Thomas Fiaschi
Dr. H. C. Hinder
Dr. A. McCormick
Dr. H. L. Maitland
Dr. C. A. Muller
Dr. J. B. Nash

HONORARY ORAL SURGEONS.

Dr. R. Arthur
Dr. A. J. Brady
Dr. Chas. MacLaurin
Dr. Russell Nolan

HONORARY RADIOGRAPHERS.

Dr. Herschell Harris
Dr. J. C. Shand

HONORARY ANÆSTHETISTS.

Dr. E. H. Binnie
Dr. E. W. Fairfax
Dr. J. J Kelly
Dr. E. Ludowici
Dr. A. A. Palmer
Dr. F. J. T Sawkins
Dr. H. S. Stacy
Dr. J. C. Windeyer

HONORARY DENTAL SURGEONS.

R. Fairfax Reading, M.R.C.S., L.R.C.P., L.D.S. (Eng.) (*ex officio*)
W. Septimus Hinder, D.D.S. (Phila.) (*ex officio*)
N. V. Pockley, D.D.S. (Phila.) (*ex officio*)
E. C. Bryden
L. A. Carter, D.D.S. (Phila.)
S. Chaim
A. Cox, M.R.C.S., L.R.C.P., L.D.S. (Eng.)
E. R. Magnus, D.D.S. (Phila.)
C. C. Marshall
H. Paterson
H. Peach, D.D.S.
P. B. Reading, L.D.S. (Eng.)
E. K. Satchell
Donald Smith
W. H. Weston, M.D., D.D.S.
M. S. Allan, D.D.S.
P. A. Ash, D.D.S.
W. T. Beckett, D.D.S.
E. Blackwell
H. H. Bond, B.D.S. (Syd.)
J. H. Bradley, B.D.S. (Syd.)
F. G. Cleeve, D.D.S.
F. R. Crouch, B.D.S. (Syd.)
E. F. Deck, L.D.S. (Eng.), D.D.S. (Phila.)
A. P. B. Dolan, B.D.S. (Syd.)
H. C. Fitzhardinge, D.D.S.
J. E. Forsyth, D.D.S.
H. G. Hardie, B.D.S. (Syd.)
Basil Jones, D.D.S.
F. D. Magnus, D.D.S.
Adin Parsons, D.D.S.
A. E. Ramsay

Dental Superintendent—1906-7—E. H. Grosse, L.D.S.

Instructor in Mechanical Dentistry—A. B. A. Palmer.

BENEFACTIONS

BESTOWED BY PRIVATE PERSONS.

Date.	Donor.	Amount. £	s.	d.	Object of Foundation.
1853	Solomon Levey, Esq. ...	500	0	0	*Scholarship*—Originally for education of Orphans in the Sydney College; now for Natural Science in Second Year in the University.
	Thomas Barker, Esq. ...	1,000	0	0	,, For Proficiency in Mathematics.
1854	Hon. Sir E. Deas-Thomson, C.B., K.C.M.G. ...	1,000	0	0	,, For Proficiency in Chemistry and Experimental Physics.
	W. C. Wentworth, Esq.	200	0	0	*Annual Prize*—For English Essay.
1857	Sir D. Cooper, Bart. ...	1,000	0	0	*Scholarship*—For Proficiency in Classics.
1858	S. K. Salting, Esq. ...	500	0	0	*Exhibition*—For a Student from the Sydney Grammar School.
1862	W. C. Wentworth, Esq.	445	0	0	*Fellowship*—For a Travelling Fellowship (amount to accumulate sufficiently).
1864	W. Lithgow, Esq. ...	1,000	0	0	*Scholarship.*
1867	Sir C. Nicholson, Bart.	200	0	0	*Annual Prize*—For Latin Verse.
	Educational Fund, devised by Dr. Gilchrist, of Sydney.				The right of the Presentation every other year to a Scholarship of £100 per annum, tenable for three years, and to be held at the University of London or of Edinburgh. Withdrawn by the Gilchrist Trustees in 1882.
1870	Earl Belmore	300	0	0	*Annual Prize*—For Agricultural Chemistry.
1872	Hon. John Fairfax ...	500	0	0	,, For Females at the Public Examinations.
1874	Mrs. Maurice Alexander	1,000	0	0	*Bursary*
1880	,, ,,	1,000	0	0	,, To assist young men in entering a Learned Profession.
1874	Subscribers to testimonial to Rev. John West	200	0	0	*Annual Prize*—At Public Examinations.
	Edwin Dalton, Esq. ...	8,000	0	0	*Scholarships*—In memory of the Rev. Dr. Woolley.
1876	Hon. John Frazer ...	2,000	0	0	*Bursaries*—In memory of his deceased sons.
	Fitzwilliam Wentworth Esq.	2,000	0	0	,, In honour of his father, William Charles Wentworth.
	Mrs. Burdekin	1,000	0	0	*Bursary.*
	Mrs. Hunter-Baillie ...	1,000	0	0	,,
1877	,, ,, ...	1,000	0	0	,, For sons of Ministers of Religion.
1877, 1888, 1889	Hon. J. B. Watt ...	3,000	0	0	*Exhibitions*—For Students from Primary Schools.
	Professor Smith ...	350	0	0	*Lectureship*—In Geology.
1877	Sir Arthur Renwick, M.D.	1,000	0	0	*Scholarship*—In the Faculty of Medicine.

Date.	Donor.	Amount. £	s.	d.	Object of Foundation.
1877	Andrew R. Cameron, Esq., M.D.	1,100	0	0	*Scholarship*—For General Proficiency.
	Mrs. Hovell	6,000	0	0	*Lectureship*—Geology and Physical Geography.
1878	Hon. George Allen ...	1,000	0	0	*Scholarship*—For Mathematics.
	Sir Charles Nicholson, Bart.				Collection of Egyptian Antiquities, etc.
	J. H. Challis, Esq. ..	750	0	0	For Great Northern Window in University Hall.
	Sir Charles Nicholson, Bart.	500	0	0	For Great Western Window.
	Sir Daniel Cooper, Bart	500	0	0	For Great Eastern Window.
	Henry O'Brien, Esq. ...	100	0	0	For Side Windows in the Hall.
	Charles Newton, Esq....	100	0	0	
	Edward Knox, Esq. ..	100	0	0	
	William Long, Esq. ..	100	0	0	
	John Dobie, Esq. ...	100	0	0	
	Robert Fitzgerald, Esq	100	0	0	
	A. Moses, Esq.	100	0	0	
	John Reeve, Esq. ...	100	0	0	
	Thomas Barker, Esq....	100	0	0	
	Henry and Alfred Denison, Esqs.	100	0	0	
	Thomas W. Smart, Esq	100	0	0	
	Sir P. A. Jennings ...	1,100	0	0	Towards an Organ for the Great Hall.
	Sir A. Renwick, M.D....	125	0	0	For purchase of book, "Lepsius' Antiquities of Egypt and Æthiopia."
	Thomas S. Mort, Esq...	315	0	0	For a Travelling Fellowship.
	Thomas Walker, Esq...	700	0	0	Being the amount paid by him for the Library of the late Mr. Stenhouse, presented to the University.
	Freemasons under the English Constitution	1,000	0	0	*Scholarship*—For the sons of Freemasons.
1880	J. H. Challis, Esq. ...	250,000	0	0	*Bequest*—Property of the estimated value of £250,000, to be applied to the general purposes of the University.
1881	Thomas Walker, Esq..	500	0	0	Towards an Organ for the Great Hall.
	Fitzwilliam Wentworth Esq.	415	0	0	To provide a Screen for the Organ Gallery.
	James Aitken, Esq. ..	1,000	0	0	*Bursary or Scholarship.*
	Thomas Walker, Esq..	5,000	0	0	*Bursaries.*
1882	Sir G. W. Allen ..	1,000	0	0	*Scholarship*—In the Faculty of Law.
1883	John Struth, Esq. ..	1,000	0	0	*Exhibition*—In the Faculty of Medicine.
1885	Thos. Fisher, Esq. ..	30,000	0	0	For establishing and maintaining a Library in the University.
1886	Subscribers to Testimonial of Rev. Dr. Norbert Quirk.	143	12	6	*Annual Prize*—For Mathematics.
	Professor Smith ..	100	0	0	,, For Physics.
1887	G. S. Caird, Esq. ...	1,000	0	0	*Scholarship*—In Chemistry.
	Subscribers to Memorial to Late Professor Badham.	1,000	0	0	*Bursary.*
	G. P. Slade, Esq. ..	250	0	0	For the Advancement of Science.
1888	William Roberts, Esq..	4,000	0	0	*Scholarship*—In memory of Mr. James King, of Irrawang, Raymond Terrace.
	Hon. Sir W. Macleay..				Museum of Natural History.
	Hon. Sir W. Macleay...	6,000	0	0	For establishing a Curatorship for the Macleay Museum of Natural History.

Date.	Donor.	Amount.			Object of Foundation.
		£	s.	d.	
1888	John Harris, Esq. ...	1,000	0	0	*Scholarship*—In the Faculty of Medicine.
	Lady Renwick	202	0	0	For a Window in the Medical School, in memory of her late father.
	P. S. Jones, Esq., M.D.	220	0	0	For Windows in the Medical School.
	G. Bennett, Esq., M.D.	140	0	0	
1889	The Trustees of the Council of Education Scholarship Fund.	290	10	1	*Scholarship*—For Sons of Officers of the Department of Public Instruction.
	John Harris, Esq. ...	120	0	0	For a Window in the Medical School, in memory of the late Dr. Harris.
	F. J. Horner, Esq., M.A.	200	0	0	*Exhibition*—In Mathematics.
1890	The Trustees of the Will of the Hon. John Frazer, M.L.C.	2,000	0	0	*Scholarship*—In History.
	George Bennett, Esq., M.D.				John Gould's Works on Ornithology.
1891	William Grahame, Esq.	100	0	0	*Annual Prize*—In the Senior Public Examination.
1892	Rev. R. Collie, F.L.S....	100	0	0	*Annual Prize*—For Botany.
1896	P. N. Russell, Esq. ...	50,000	0	0	For the endowment of the P. N. Russell School of Engineering and for *Scholarships*.
1904	,,	50,000	0	0	
1898	Thomas Garton, Esq. ...	2,050	0	0	*Scholarships*—In French and German.
1900	Henry Wait, Esq. ...	1,000	0	0	*Bursary*—In the Faculty of Medicine.
	Mrs. George Harris ...	1,700	0	0	*Scholarship*—In the Faculty of Law.
	Cecil Darley, Esq. ...				An Astronomical Equatorial Telescope and Accessories.
1901	Earl Beauchamp ...	625	0	0	Prize for an English Essay.
	Mrs. Jessie E. Duncan	808	19	6	*Bursary*.
1903	George Masters, Esq....				A Natural History Collection.
1904	Kambala Girls' Union	250	0	0	*Annual Prize*—For Girls at Matriculation.
1905	Queen Victoria Scholarship.	547	14	9	*Scholarship*—For Girls at Matriculation.
	Mrs. Janet Coutts ...	2,700	0	0	Two *Scholarships*.
	Mrs. William Grahame	1,000			*Prizes* or *Scholarship*.

A LIST OF DONATIONS TO THE LIBRARY,

April, 1905, to March, 1906.

Calendars and other Publications by the following Universities, etc.:—

Aberdeen, Adelaide, Allahabad, Armstrong College (Newcastle-upon-Tyne), Auckland, Bendigo School of Mines, Birmingham, Bombay, Brown (Providence), Budapest, Calcutta, California, Cambridge, Canterbury College (Christchurch), Cape of Good Hope, Case School of Applied Sciences, Catania, Chicago, Clinical Society (London), Columbia (New York), Columbus (Ohio), Cornell, Dalhousie (Halifax), Dublin, Durham (College of Medicine), Edinburgh, Evanston, Glasgow, Glasgow Technical College, Grenoble, Harvard (Cambridge), Iowa, Japan (Tokyo), Johns Hopkins (Baltimore), King's College (London), Klausenburg, Kyoto, Lemberg, Lille, Liverpool, London, Lyon, McGill College (Canada), Madras, Manchester, Melbourne, Michigan, Missouri, Montana, Montpellier, New Zealand, New York, North Wales (Bangor), North-Western, Ohio, Otago, Owen's College (Manchester), Padua, Panjab (Lahore), Paris, Pennsylvania, Perth Technical School, Pisa, Princeton (New Jersey), Queen's College and University (Canada), Regia Università deglia Studi di Roma, Rennes, Royal College of Surgeons (London), Royal University of Ireland, St. Andrew's, Sanskrit College (Benares), Sapporo Agricultural College, South Australian School of Mines, Syracuse, Tasmania, Texas, Torino, Toronto, Trinity College (London), Trinity College (Dublin), Union of Graduates in Music, Universidad Central des España, University College (Auckland), University College (Liverpool), University College (North Wales), University College (South Wales and Monmouthshire), Venezuela, Vermont, Victoria (Manchester), Worcester Polytechnic Institute, Wisconsin, Wyoming, Yale (New Haven), Yorkshire College (Leeds), Zurich.

Proceedings, Transactions, etc., from the following Societies, etc.:—

Aachen Technischen Hochschule, Aberdeen Public Library, Académie de Neuchâtel, Académie Nationale des Sciences (Cordoba), Adelaide Public Library, Adyar Library (Madras), American Climatological Association, Australian Association for the Advancement of Science, Australian Institute of Mining Engineers, Australian Museum, Biblioteca Nazionale Centrale di Firenze, British Museum, Cambridge Philosophical Society, Canadian Club (Harvard), Carnegie Institute (Pittsburg) Carnegie Institution (Washington), Carnegie Museum (Pittsburg), Chicago Academy of Sciences, Clinical Society of London, Colombo Museum, Durbar Library (Nepaul), Earthquake Investigation Committee (Tokyo), Ecole Pratique des hautes études, Egyptian Government School of Medicine (Cairo),

Engineering Association of New South Wales, Glasgow Philosophical Society, Hunterian Collection Trustees (Glasgow University), Institute of Chemistry (London), Institute of Civil Engineers (London), Institute of Electrical Engineers, Intercolonial Medical Congress, International Engineering Congress, John Rylands Library, Johns Hopkins Hospital, Latin-American Medical Congress, Linnean Society of New South Wales, London County Council, London School of Economics, Malay States Institute for Medical Research, Manchester Steam Users' Association, Medical Council (London), Middlesex Hospital, National Academy of Science (Washington), National Physical Laboratory (England), New Sydenham Society, New Zealand Institute, Northampton Institute (London), Osservatorio Vaticano (Roma), Pathological Society of London, Pharmaceutical Society of Great Britain, Royal Prince Alfred Hospital (Sydney), Regia Scuola Superiore di Agricoltura di Portici, Royal Academy of Medicine (Ireland), Royal College of Physicians (London), Royal College of Science (London), Royal College of Surgeons of England, Royal Colonial Institute (London), Royal Irish Academy (Dublin), Royal Societies of Canada, Dublin, Edinburgh, London, New South Wales, Queensland, South Australia, and Victoria; St. Bartholomew's Hospital (London), Smithsonian Institution (Washington), Société française de Physique, South African Museum, South African Philosophical Society, Sydney Public Library, Sydney University Engineering Society, Technological Museum of New South Wales, Thames School of Mines (New Zealand), Tokyo Zoological Society, Transvaal Technical Institute, University Club (New York), Volta Bureau (Washington), Wellcome Chemical Research Laboratories, Wesleyan Methodist Mission House, Wisconsin Academy of Science, Worcester Polytechnic Institute, Zeehan School of Mines, Zurich Naturforschenden Gesellschaft.

Publications of the Archæological Survey and Meteorological Department of India; Bureau Communal des Statistiques (Budapest); Bureau of American Ethnology; Bureau of Education, Coast and Geodetic Survey, Department of Agriculture and Geological Survey of United States; Familistère de Guise; Geological Commission of Capetown, Geological Survey of Minnesota; Geological Survey of Canada; Government Printing Office, Burma; Mines Department of New Zealand; State Library, Albany, United States.

Acts of the Parliament of Victoria and Report of the Minister of Public Instruction, by the Government of New Zealand.

Statutes of New Zealand, by the Government of New Zealand.

Meteorological Observations, by the Government Astronomers of South Australia and Western Australia.

Report of the Royal Observatory, Cape of Good Hope, by the Government Astronomer of South Africa.

Publications of the Government of New South Wales, by the Government of New South Wales.

Records of the Sydney Observatory, by the Government Astronomer.

Books, etc., were presented by the Lords of the Treasury of Great Britain and Ireland, Henryk Arckowski, Esq., K. Binns, Esq., Messrs. Blackie & Sons, E. Le Gay Brereton, Esq , J. Le Gay Brereton, Esq., Professor Carslaw, R. Caton, Esq., Messrs. Digby, Long & Co., E. J. Forbes, Esq., Professor W. A. Haswell, A. N. Henshaw, Esq., A. Jarman, Esq., O. Krause, Esq., V. Lieutand, Esq., Messrs. Longmans, Green & Co., Messrs. Macmillan & Co., D. Mawson, Esq., Lady Meux, D. S. Mitchell, Esq., H. S. Mort, Esq., Messrs. Pantin et Cie., D. H. Souter, Esq., J. Tebbutt, Esq., J. Timewell, Esq., F. E. Wallace, Esq., Adair Welcker, Esq., Professor Wilson.

Books, etc., were presented to the Library in terms of the "Copyright Act, 1879," by The A.J.C., The Bulletin Publishing Company, Casino Song Publishing Company, The Law Book Publishing Company of Australasia, Newcastle School of Arts, N.S.W. Bookstall Co., Messrs. Angus & Robertson, A. W. Apsey, Baker & Rouse, W. Brooks & Co., S. F. Broomhall. E. Brown, T. B. Dineen, E. J. Forbes, J. Fotheringham, A. Gehde, Glen & Co., Gordon & Gotch, Hepburn & Spruson, Johnston & Co., Kealey & Philip, C. E. King, Methodist Church of Australia, N.S.W. Athletic League, W. H. Paling & Co., W. C. Penfold & Co., A. H. Prince, Rue Sage, John Sands, J. Slater, W. E. Smith, W. H. Sproull & Co., J. J. Virgo, E. Walker, F. Walsh, and the publishers of Australasian Medical Gazette, Australian Field, Australian Journal of Education, Australian Photographic Journal, Barraba Gazette, Citizen, Courier Australien, Christian World, Commonwealth Dental Review, Dalgety's Review, Dawn, Good Health, Hall's Mercantile Gazette, Home Queen, Independent, Jabberwock, Journal of the Institute of Bankers, Knaggs' Almanac, Nepean Times, New South Wales Educational Gazette, New South Wales Teacher, Pastoralists' Review, The Pilot, New South Wales Railway Budget, The Review, Sands' Sydney and Suburban Directory, Sheepbreeders' Year Book, South Coast Building Society, Sydney Daily Telegraph, Sydney Diocesan Directory, Sydney Mail, Sydney Morning Herald, Stock and Station Journal, Trade Protection Institute Reports, Year Book of Australia.

REPORT

OF THE

SENATE OF THE UNIVERSITY OF SYDNEY

FOR THE YEAR ENDED 31ST DECEMBER, 1905.

1. The Senate of the University of Sydney, in pursuance of the provisions of section 16 (1) of the "University and University Colleges Act, 1900," has the honour to transmit the account of its proceedings during the year 1905 for the information of his Excellency the Governor and Executive Council.

Matriculation.

2. The number of persons who qualified themselves for Matriculation in 1905 by passing one of the various University Examinations was 410. Of these, 164 passed the ordinary Matriculation Examination, 127 the Junior Public Examination, 23 the Law Matriculation Examination, 69 the Senior Public Examination, and 27 the Entrance Examination for Law, Medicine and Science. The number of students actually admitted to Matriculation, with a view to proceeding with the curriculum in one of the various Faculties, was 184.

Attendance at Lectures.

3. The following table shows the number of students who attended lectures in the several Faculties :—

Faculty of Arts (day), 229; (evening), 140. Total		369
Faculty of Law		52
Faculty of Medicine		243
Faculty of Science		36
Faculty of Science—Department of Engineering		80
School of Dentistry		45
Pharmacy Students		61
Research Students		3
		889
Attending Post-graduate courses—Faculty of Arts ..	17	
Faculty of Medicine.	42	59
Total		948

Included are 112 women who attended in the Faculty of Arts, 22 in Medicine, 7 in Science, and 2 in Dentistry; total, 135. The above total also includes 62 non-matriculated students, and students attending special courses, irrespective of Pharmacy students.

Annual University Examinations.

4. The number of students who attended and passed the Annual Examinations in December, 1904, and March, 1905, after attending the prescribed courses of lectures, is shown in the following table:—

FACULTY OF ARTS.

	Candidates.	Passed.
First Year Examination	150	117
Second Year Examination	68	60
Third Year Examination	46	42

In addition to the students passing through the regular curriculum, 28 evening students and students of special subjects, including six women, passed the examinations in individual subjects, after attendance upon the prescribed lectures.

FACULTY OF LAW.

	Candidates.	Passed.
Intermediate Examination—Section I.	16	16
Section II.	12	12
Final Examination	13	10

FACULTY OF MEDICINE.

	Candidates.	Passed.
First Year Examination	56	46
Second Year Examination	36	32
Third Year Examination	36	32
Fourth Year Examination	33	32
Fifth Year Examination	41	29

FACULTY OF SCIENCE.

	Candidates.	Passed.
First Year Examination	13	13
Second Year Examination	6	6
Third Year Examination	4	4

FACULTY OF SCIENCE—DEPARTMENT OF ENGINEERING.

	Candidates.	Passed.
First Year Examination	27	23
Second Year Examination—Civil	2	0
,, ,, ,, Mining and Metallurgy	8	8
,, ,, ,, Mechanical and Electrical	11	7

Third Year Examination—Civil	3	3
,, ,, ,, Mining and Metallurgy	14	14
,, ,, ,, Mechanical and Electrical	3	3
Fourth Year Examination—Mechanical and Electrical	3	3

In the Faculty of Science and the Department of Engineering 10 students of special subjects passed in the final examinations of their subjects.

SCHOOL OF DENTISTRY.

	Candidates.	Passed.
First Year Examination	5	5
Second Year Examination	12	12
Third Year Examination	10	9

Forty-five students seeking a qualification in Pharmacy attended the University Examinations at the conclusion of the courses of lectures which they had attended. Thirty-nine passed in individual subjects, eight completing the whole course.

Degrees Conferred.

5. The following degrees were conferred after examination:—

Master of Arts (M.A.):—Pearl Ella Barnes, Percival Richard Cole, Florence Mildred Fry, Lottie Fullerton (Mrs. Austin), Florence Jane Murray (Mrs. Armitage), James McDowall, Ernest Arthur Riley, William Smith, Florence Wark.

Bachelor of Arts (B.A.):—Clare Annie Constance Armstrong, Albert Charles Askham, Fanny May Austin, Isaac Manly Barrow, Duncan Robertson Barry, Marie Boyd Burfitt, Stanislaus Kostka Callaghan, Archie James Coombes, Ethel Curren, Madeleine Mabel Dawes, Wilfred Brougham Docker, Robert Johnstone Douglas, Samuel Wilfred Ebsworth, Millicent Fox, Frances Graham, Victor Haigh, Lewis Alexander Harris, Robert Greenway Henderson, Hugh Henry, Thomas Harvey Johnston, Felicie Aurelie la Douce, Meta Gertrude Emily Latreille, Hugh Eldred Manning, Horace Francis Markell, Hector Pope Melville, Olive Lenore Mott, Robert Sterling Murray-Prior, Clarence Hunter Northcott, Florence Isabelle Mantell Oakes, John Paterson, Alfred Paul, John Joseph Quinn, Edward Thynne Real, Leslie Alfred Redgrave, Percival Halse Rogers, Jessie Skillman, Ella Mary Slack, Arthur Hamilton Tebbutt, George Leigh Tomlinson, Samuel Edward Townsend, Ernest Frederick Waddy, Robert Thompson Wade.

Bachelor of Laws (LL.B.):—Alroy Maitland Cohen, John Alexander Ferguson, Henry Mackenzie Green, Sydney Trevillian Hodge, Richard Cyril King-Kemp, William Carlow Lindsay, Colin Archibald Sinclair, Kenneth ffoulkes Swanwick, Herbert Frazer Watson.

Bachelor of Medicine (M.B.):—Joseph David Buchanan, Erasmus Algernon Robert Bligh, Thomas Bennett Clouston, Joseph Coen, Ernest Culpin, Alfred Edmund Finckh, Karl Randolph Wilhelm Goergs, John Neville Griffiths, John Joseph Holland, Lincoln Jones, Stuart Kay, Herbert Williams Kendall, James Robert Leslie, Walter Charles Mansfield, Valentine McDowall, St. Andrew William Logan McDowall, James Michael McEncroe, John Lawrence McKelvey, Susannah Hennessy O'Reilly, John Wardell Power, Alfred John Spencer Cecil Roberts, Cyril Shellshear, Francis George Macneil Simpson, Percy Edward Walton Smith, Sarah Louisa Ure, Arthur Verge, Geoffrey Hampden Vernon, Reginald John Nelson Whiteman, Edgar Harold Young.

Master of Surgery (Ch.M.):—Erasmus Algernon Robert Bligh, Joseph David Buchanan, William John Durack, Hedley Ebenezer Fox, Stuart Kay, Oliver Latham, James Robert Leslie, James Michael McEncroe, John Wardell Power, Alfred John Spencer Cecil Roberts, Cyril Shellshear, Francis George Macneil Simpson, Percy Edward Walton Smith, Arthur Verge, Reginald John Nelson Whiteman, Edgar Harold Young.

Doctor of Medicine (M.D.):—James Shedden Davis.

Doctor of Science (D.Sc.):—James Matthew Petrie, James Arthur Pollock.

Bachelor of Science (B.Sc.):—George James Gray, William Henry Mason, Douglas Mawson, Charles Ernest Weatherburn.

Bachelor of Engineering (B.E.):—William Guy Broughton Boydell, John Henry Burgess, Harold Arthur Brooks, George Frederick Campbell Brown, Arthur Hilton Dight, John Joseph Patrick Garry, Athelstan Markham Martyn, Herbert Theodore Rawson Harris, Collis Carleton Nardin, Tom Mackellar Owen, Cecil Percival Platt, Thomas Robert Rae, Robert Stewart Reid, Garnett Stemyn Skuthorpe, James Alexander Moore Smaill, James Farish Stephen, Thomas Griffith Taylor, Sydney Douglas Webb, Lancelot Richard Woodcock.

Master of Engineering (M.E.):—John Norman Campbell MacTaggart.

License in Dental Surgery (L.D.S):—Margaret Estelle Barnes, Harold Henry Bond, Reginald Septimus Boys, Cyril Theodore Burkitt, John James Clark, Howard Gordon Hardie, Cecil George Moxham, James Harold Neale, John Norman Starkey.

The following *ad eundem* degrees were conferred, in accordance with the provisions of Section 21 of the University and University Colleges Act, 1900 :—

Bachelor of Arts.—Charles Gregory Wade, Oxford.

Bachelor of Medicine.—William Grant, Edinburgh.

Doctor of Medicine.—Sinclair Gillies, London.

Bachelor of Science.—Richard Hosking, B.A., (Research), Cambridge; Ellis Hyde, B.Sc., Victoria University.

6. The total number of degrees conferred during the year was as follows:—M.A., 9; B.A., 43; LL.B., 9; M.D., 2; M.B., 30; Ch.M., 16; D.Sc., 2; B.Sc., 6; M.E., 1; B.E., 19 L.D.S., 9. Total, 146.

7. The degrees conferred by the University from its foundation to the end of 1905 are:—M.A., 330; B.A., 1241; LL.D., 25; LL.B., 128; M.D., 50; M.B., 313; Ch.M., 222; D.Sc., 3; B.Sc., 57; M.E., 5; B.E., 148; L.D.S., 17. Total, 2539.

University Examinations.

8. The results of the Annual University Examinations, held in December, 1904, and March, 1905, including the award of Annual Prizes and Scholarships, will be found appended to this report.

Prize Compositions.

9. The awards made for Prize Compositions are as follows:—

University Prize for English Verse.—Subject: "The Execution of Sir Thomas More." L. H. Allen, B.A.

Wentworth Medal for English Essay——Subject: "The Place of Poetry in Modern Life." Graduates—L. H. Allen, B.A.; Undergradutes—M. L. MacCallum.

The *Beauchamp* Prize for Essay.—Subject: "The Future of Cabinet Government in Australasia." W. Maxwell, B.A.

Professor Anderson's Medal for a Philosophical Essay.—Subject: "The Concept of Matter." J. W. G. Powell, B.A.

Bursaries, etc.

10. The number of students permitted to attend lectures without paying fees was 150, including 47 State Bursars and holders of the University Bursaries, and 83 students and ex-students of the Training College. The payments to bursars, other than State Bursars, amounted to £725, and to scholars, £1688.

11. The following bursaries were awarded, each consisting of a payment to the student of a certain sum per annum, for three years, together with exemption from the payment of lecture fees in the Faculty of Arts, or that of pure Science:—

The *Watt* Exhibiton (£30, £40, £50).

The *Maurice Alexander* Bursary (£50).

The *Ernest Manson Frazer* Bursary (£25).

The *John Ewan Frazer* Bursary (£25).

The *Burdekin* Bursary (£50).

The *Thomas Walker* Bursaries (£100).

Public Examinations.

12. The Junior Public Examination was held in the month of June, in Sydney, and at the following local centres:—

New South Wales.—Albury, Armidale, Bathurst, Bega, Bellingen, Bombala, Braidwood, Corowa, Cowra, Cootamundra, Deniliquin, Dubbo, Forbes, Frederickton, Goulburn, Glen Innes, Grafton, Gunnedah, Inverell, Lismore, Lithgow, Liverpool, Maitland, Milton, Moruya, Mudgee, Murwillumbah, Newcastle, Orange, Parramatta, Port Macquarie, Quirindi, Rylstone, Scone, Singleton, Tamworth, Taree, Wagga Wagga, Wahroonga, Windsor, Wingham, Wollongong, Yass, Young.

Queensland.—Brisbane, Bundaberg, Charters Towers, Gympie, Ipswich, Maryborough, Rockhampton, Toowoomba, Townsville, Warwick.

The number of candidates was 1265, and of these 879 gained certificates.

13. The Senior Public Examination was held in November concurrently with an examination for Matriculation Honours and Scholarships, in Sydney, and at the following local centres:—

New South Wales.—Armidale, Bathurst, Blackheath, Cooma, Goulburn, Maitland, Mudgee, Wahroonga, Wollongong.

Queensland.—Brisbane, Ipswich, Maryborough, Rockhampton, Toowoomba, Townsville, Warwick.

The number of candidates was 161, and of these 133 were successful.

14. The Prizes for general proficiency in the Senior and Junior Public Examinations were awarded as follows:—

Seniors.

John West Medal and *Grahame* Prize Medal—

Frederick Walter Robinson, Boys' Public High School, Sydney.

Fairfax Prize for Senior Females—

Edith Shortland, Girls' Public High School, Sydney.

Juniors.

University Prize for General Proficiency among male candidates—

Lennox Graham Teece, Sydney Grammar School.

Fairfax Prize for female candidates—

Gladys Vera Stephen, Miss E. C. Baxter.

Examination for Articled Clerks.

15. Two Law Examinations were held, similar to that prescribed for Matriculation, for candidates for Articles of Clerkship with Solicitors. 50 candidates attended and 23 passed.

Meetings of Senate.

16. The Senate held 11 ordinary meetings and 3 special meetings, in addition to the Annual Commemoration. There were also 2 meetings of the Conjoint Board, consisting of the Senate of the University and the Directors of the Prince Alfred Hospital.

The attendances of the various Fellows were as follows:—

MacLaurin, the Hon. Sir Normand, M.A., LL.D., M.D., M.L.C., Chancellor	16
Jones, Sir Philip Sydney, M.D., Vice-Chancellor	14
Anderson, H. C. L., Esq., M.A.	14
Backhouse, His Honour Judge, M.A.	16
*Barton, the Right Hon. Sir Edmund, G.C.M.G., P.C., M.A., LL.D.	6
Butler, Professor T., B.A.	14
*Cobbett, Professor Pitt, M.A., D.C.L.	3
Cullen, the Hon. W. P., M.A., LL.D., M.L.C.	13
David, Professor, B.A., F.R.S.	15
*Griffith, the Right Hon. Sir Samuel W., M.A., G.C.M.G., P.C.	7
Knox, Edward W., Esq.	12
MacCallum, Professor M. W., M.A.	15
*O'Connor, the Hon. Mr. Justice R. E., M.A.	3
Renwick, the Hon. Sir Arthur, B.A., M.D., M.L.C.	15
Rogers, His Honour Judge, M.A., LL.B.	8
*Russell, H. C., Esq., B.A., F.R.S., C.M.G.	1
Simpson, the Hon. Mr. Justice A. H., M.A.	12
Stephen, C. B., Esq., M.A.	10
Stuart, Professor T. P. Anderson, LL.D., M.D.	14
*Teece, Richard, Esq., F.I.A., F.F.A.	14

* Absent on leave.

17. At the various meetings of Sub-Committees of the Senate, for Finance, Military Instruction, D. P. H. Committee, Grounds and other matters, held during the year, the attendances of members were as follows:—The Chancellor (the Hon. Sir Normand MacLaurin), 20; the Vice-Chancellor (Sir Philip Sydney Jones, M.D.), 13; His Honor Judge Backhouse, 13; the Hon. Sir Arthur Renwick, M.D., 13; E. W. Knox, Esq., 8; the Hon. Mr. Justice A. H. Simpson, 9; R. Teece, Esq., 2; Professor Stuart, 4; Professor David, 5; Professor MacCallum, 5; H. C. L. Anderson, Esq., 3; the Hon. Dr. Cullen, 1.

Vice-Chancellor.

18. The annual election to the office of Vice-Chancellor, in the month of April, resulted in the unanimous re-election of P. Sydney Jones, Esq., M.D.

In the month of June the honour of knighthood was conferred by his Majesty upon Sir Philip Sydney Jones, in recognition of his valuable services rendered to the public of New South Wales.

Staff Appointments, &c.

19. Mr. J. A. Schofield, A.R.S.M., F.I.C., Demonstrator in Chemistry, was appointed evening lecturer in Chemistry for the year 1905. In the month of March Mr. H. I. Jensen, B.Sc., resigned his office as Junior Demonstrator in Chemistry upon his appointment to a Macleay Research Fellowship. Mr. T. H. Laby, Junior Demonstrator in Chemistry, resigned his office in the month of April, upon his appointment to a science research scholarship offered by the Royal Commissioners of the Exhibition of 1851. Mr. J. M. C. Corlette, B.E., resigned his Junior Demonstratorship in Engineering in the month of August, to take up a professional appointment, and was succeeded by Mr. A. M. Martyn, B.E.

20. Leave of absence for a period of twelve months was granted to Dr. Sydney Jamieson, Lecturer in Medical Jurisprudence, to enable him to visit Europe. Mr. R. H. Todd, M.D., was appointed to deliver his course of lectures, and to conduct the annual examinations of students. Leave of absence, for a period of six months, was granted to Mr. R. A. Dallen, Chief Clerk and Accountant in the Registrar's office, in consequence of ill-health, after eighteen years' service. Leave of absence, for a period of twelve months, was granted to Mr. A.

Newham, B.A., Evening Lecturer in Mathematics, after twenty years' service. Mr. Newham proposes to take an extended tour in Europe during 1906, and will gain experience which will be of material assistance to him in the discharge of his University duties. The evening lectures in Mathematics will be delivered during his absence by Mr. E. M. Wellisch, B.A., a distinguished graduate in that department.

21. The following Junior Demonstrators were appointed during the year:—Mr. H. A. Brooks, B.E., was appointed to the office of Junior Demonstrator in Physics in the month of March. Mr. L. R. Woodcock, B.E., was appointed to the office of Junior Demonstrator in Engineering in the month of March. Mr. G. J. Gray, B.Sc., B.E., was appointed to the office of Junior Demonstrator in Engineering in the month of September. Mr. S. G. Walton was appointed to the office of Junior Demonstrator in Chemistry in the month of September. Mr. T. G. Taylor, B.Sc., B.E., was appointed to the office of Junior Demonstrator in Geology in the month of November.

Title of Emeritus Professor.

22. The title of Emeritus Professor has been conferred upon Messrs. T. T. Gurney, M.A., and W. Scott, M.A. The former held the office of Professor of Mathematics and Natural Philosophy in the University for a period of twenty-five years, while Mr. Scott was Professor of Greek for a period of fifteen years, having retired in 1900 through ill-health. This title is intended by the Senate as a recognition of valuable work done for the University and the public of New South Wales.

Women's College Council.

23. Mr. H. C. L. Anderson, M.A., and the Honourable W. P. Cullen, M.A., LL.D., were appointed *ex officio* members of the Women's College Council for a period of two years.

University Library.

24. The number of volumes in the University Library is now 67,000, the appropriation for the purchase of books, repairs and binding for the year being £1,086.

The existing disadvantages of limited space for library management and the storage of books have not been lessened, but good progress has been made with the erection of the Fisher Library building, the completion of which is now within measurable distance.

Mr. J. S. Heron, of "Wansford," Pennant Hills, has made a perpetual loan to the library of an interesting document written on parchment, being an agreement by James Watt for the erection of a steam engine in the year 1792.

Department of Military Education.

25. The Senate has had under consideration during the year the question of the establishment of a Department of Military Studies.

The subject was first brought under attention by a communication from the Commonwealth Department of Defence, conveying certain amended regulations of the Advisory Board on military education in the United Kingdom for the appointment of University candidates to commissions in the army.

Under the amended regulations such commissions, instead of as heretofore being open to students who had completed a portion of their course, will be open only to graduates who have received a certain amount of military training during their course.

Upon consideration of these proposed conditions, it appeared to the Senate that the establishment of a Department of Military Studies in the University would be valuable not only for the purposes of commissions in the Imperial Army, for which the number of candidates has hitherto been limited, but in a much greater degree by disseminating amongst the University students, a number of whom are members of the University Volunteer Corps, the principles underlying the military art; as well as the provision of systematic instruction for those who propose to become candidates for commissions in the Australian military forces, and officers in those forces seeking promotion.

The proposal was put before the Commonwealth Government, which gave its cordial approval, and promised its hearty co-operation, appointing a military officer (Lieut.-Col. Bridges) to assist the Senate in preparing a definite scheme.

It has now been decided to appoint a Lecturer in Military History, Strategy, Tactics, and Imperial Defence, to hold office for a period of three years; and also to provide for teaching in Military Engineering, Military Topography, Military Law, Military Administration and Organisation, Artillery, Submarine Mining and Electric Light.

The Commonwealth Government has undertaken to co-operate by arranging for qualified officers to give lectures in military subjects not included in the principal lectureship; by exempting holders of University certificates from passing (1) the qualifying examination for the permanent forces, (2) in certain subjects for promotion, (3) by providing facilities for officers to attend the University courses, and (4) by arranging for practical instruction in Drill, Musketry, Artillery and other subjects, and by grants of ammunition.

Steps have been taken for the selection in England of a military officer to take the principal lectureship, and it is intended, if possible, to bring the new department of military studies into active operation in September, 1906.

School of Dentistry.

26. The negotiations for the amalgamation of the University Dental Hospital with the Dental Hospital of Sydney were completed early in the year, and the two hospitals were amalgamated from the 1st of June under the name of "The United Dental Hospital of Sydney."

The Council of the United Dental Hospital of Sydney consists of six members nominated by the Senate of the University and six members representing the Council of the Dental Hospital of Sydney to hold office for one year. Vacancies amongst those appointed by the University are filled up by the Senate, and vacancies amongst those appointed by the Dental Hospital of Sydney are filled up by election by the subscribers to the Hospital.

The representatives appointed by the Senate were:—Professor Anderson Stuart, M.D., H. C. L. Anderson, Esq., M.A., Professor Welsh, M.D., W. Septimus Hinder, Esq., D.D.S., N. V. Pockley, Esq., D.D.S., and Dr. Fairfax Reading.

The operations of the Hospital have been carried on in the building previously occupied by the University Dental Hospital, at the corner of George and Bathurst Streets.

Diploma in Public Health.

27. In the month of October, it was resolved by the Senate, on the motion of the Vice-Chancellor (Sir Philip Sydney Jones), "That it is expedient to establish a Diploma of Public Health."

It was then referred to the Faculty of Medicine to draw up regulations to govern the award of the Diploma, and the eligibility of candidates.

The Faculty had not reported at the end of the year, but it is intended to bring the proposed new regulations into operation at the earliest possible date.

It is believed that the Diploma in Public Health will be an inducement to medical graduates to qualify themselves for positions of officers in public health in the various districts constituted under the Local Government Bill, which has lately become law.

Post-graduate Courses in the Faculty of Medicine.

28. In Trinity Term, a post-graduate course on the Anatomy of the Pelvis and Perinæum was delivered by Mr. F. P. Sandes, M.D., Acting-Professor of Anatomy. In Michaelmas Term, two post-graduate courses were delivered by Professor Welsh, on the Pathology of the Blood:—(i.) A course of six lectures and demonstrations; (ii.) a course of six meetings for practical work. These courses were well attended.

Commercial Education.

28. No definite action was taken during the year in regard to the establishment of courses in Commercial Education, pending the issue of the report of the Education Commissioners on this subject.

That report having been issued, the matter will receive early consideration. and a scheme of Commercial Education will probably be brought into operation early in 1906.

University Extension Board.

29. The University Extension Board reports that the following courses of lectures were delivered during 1905:—

(A) A course of six lectures on Typical Historical Characters, by Professor Wood, M.A., in connection with the Public School Teachers' Association, with an average attendance of over 500.

(B) A course of three lectures on the teaching of Elementary Mathematics, by Professor Carslaw, M.A., D.Sc., in connection with the Public School Teachers' Association, with an average attendance of over 115.

(C) A course of six lectures on the life of Ancient Athens from day to day, by Professor Tucker, M.A., D.C.L., of Melbourne University, with an average attendance of over 420.

(D) A course of seven lectures on Scientific Subjects, by Professor Baldwin Spencer, M.A., C.M.G., F.R.S.; Professer T.W. E. David, B.A., F.R.S.; and A. H. Lucas, Esq., M.A., B.Sc., with an average attendance of over 260.

(E) A course of six lectures on Agriculture, by H. C. L. Anderson, Esq., M.A., Head of the Intelligence Department; H. W. Potts, Esq., F.C.S., F.L.S., Principal Hawkesbury College; F. B. Guthrie, Esq., F.C.S., Chemist Department of Agriculture; M. A. O'Callaghan, Esq., Dairy Expert, Department of Agriculture; R. T. McKay, Esq., Assistant Engineer Water Conservation; J. H. Maiden, Esq., F.L.S., Director, Botanic Gardens; with an average attendance of over 55.

(F) A course of seven lectures on Public Finance and Accounts, by J. Russell French, Esq., General Manager, Bank of New South Wales; B. R. Gelling, Esq., Secretary Mutual Life Association of Australasia; C. G. L. Boyce, Esq., Chief Accountant, Treasury; W. H. Hall, Esq., Acting Government Statistician; H. Dunstan Vane, Esq., F.S.I.A., Public Accountant; G. E. Brodie, Esq., Chief Inspector of Public Accounts; with an average attendance of about 120.

(G) A course of four lectures at Goulburn on Hamlet, by Professor M. W. MacCallum, M.A., with an average attendance of 80.

(H) Two lectures on the Parthenon, and one lecture on the Moon, at Newcastle, by Professor W. J. Woodhouse, M.A., with an average attendance of 90.

The Board has made new departures or further advances in in the way—

(*a*) Of affording Sydney audiences the opportunity of listening to lecturers from beyond the State of New South Wales;

(*b*) Of providing popular scientific lectures with the requisite illustrations;

(*c*) Of providing more practical technical or professional instruction.

In each of these directions the success has been satisfactory to judge by the attendances; and the reports and comments of the press would seem to show that these efforts meet with a general approval that cannot fail to strengthen the position of the University in the community at large.

The Board proposes to increase its usefulness in these directions, and more particularly in arranging courses that will be helpful to members of the commercial and industrial communities, and to public servants as well as the general public, and to extend its operations in the country.

In Queensland, courses were delivered under the auspices of the Board in connection with the Brisbane Technical College, and the College of Pharmacy, on Botany, Geology, and Theoretical and Practical Chemistry. A Literary course was also delivered by Mr. N. J. Gough, B.A., Lecturer in French of the Sydney University.

The following were elected in November to be members of the University Extension Board for the year 1906:—

Members of the Senate: His Honour Judge Backhouse, M.A., H. C. L. Anderson, Esq., M.A., Hon. W. P. Cullen, M.A., LL.D., R. Teece, Esq., F.I.A.

Members of the Teaching Staff:—Professors F. Anderson, M.A., Pitt Cobbett, M.A., D.C.L., T. W. E. David, B.A., F.R.S., M. W. MacCallum, M.A., G. Arnold Wood, M.A., W. J. Woodhouse, M.A.

Unofficial Members: Rev. J. Fordyce, M.A., LL.D., Rev. A. Harper, M.A., D.D., R. F. Irvine, Esq., M.A., John Kent, Esq., G. S. Littlejohn, Esq., E. B. Taylor, Esq., J. M. Taylor. Esq., M.A., LL.B., J. P. Cochrane, Esq.

Macleay Fellowship.

30. The first appointment of a Macleay Fellow by the Linnean Society of New South Wales under the bequest of the late Honourable Sir William Macleay was made early in the year. The successful applicant was Mr. H. I. Jensen, B. Sc., a distinguished graduate in the Department of Geology. Mr. Jensen is pursuing his researches in the Geological Laboratory of the University of Sydney. The title of the research upon which Mr. Jensen is engaged is "Petrological and Statigraphical Investigation of the Trachytes of Eastern Australia and associated rocks; the study of their nature, age, and relationships, and the application of the results arrived at to further our knowledge of magnetic differentiation in the Eastern Australian petrographical province."

Rhodes Scholarship.

31. The appointment of a scholar for New South Wales for the year 1905, under the will of the late Mr. Cecil J. Rhodes, was made in April. The Selection Committee consisted of the Governor of New South Wales in his private capacity, the Chief Justice of New South Wales, and the Senate of the University acting on the recommendation of the Professorial Board.

The Senate nominated the Chancellor, Vice-Chancellor, and the Chairman of the Professorial Board as its representatives on the Committee of Selection.

There were five applications for the Scholarship, and the Committee selected and nominated as the most suitable candidate, Mr. P. H. Rogers, a student who had just completed the three years' course for the degree of Bachelor of Arts.

The Woolley Travelling Scholarship.

32. This Scholarship, which is of the value of £150 per annum, for two years, founded under the will of the late Edwin Dalton, Esq., was awarded to Mr. P. R. Cole, B.A., a distinguished student in the Department of Philosophy and History.

Mr. Cole has been proceeding with his studies in the University of London in the Department of Philosophy and Education. He proposes, during the second year of the tenure of the scholarship, to attend some courses of instruction at one of the great American Universities.

Science Research Scholarship.

33. The Science Research Scholarship offered to the University of Sydney for the year 1905 by the Royal Commissioners of the Exhibition of 1851 was awarded to Mr. T. H. Laby. Mr. Laby was for three years a distinguished student in the Faculty of Science, having made some valuable investigations in the Department of Chemistry which had been already recognised by the Royal Society of London. Mr. Laby has entered the Cavendish Laboratory in the University of Cambridge, where he is pursuing his studies and investigations with a view to proceeding to the Cambridge B.A. Research Degree. The value of the scholarship is for £150 for two years, but it may, under exceptional circumstances, be renewed for a third year.

Benefactions.

34. The Senate has to acknowledge the receipt of the following benefactions in addition to a large number of donations to the University Library:—

(A) The sum of £547 from the subscribers to a memorial of the late Queen Victoria for the foundation of a scholarship to be called the "Queen Victoria Memorial Scholarship"; such scholarship to be awarded to the best girl matriculant of the year, and to be tenable for three years, under the conditions usually existing for scholarships.

(B) The sum of £2,700 from Mrs. Janet Coutts, for the foundation of two scholarships, in memory of her deceased sons who were graduates of the University. One of the Scholarships is to be awarded for distinction in English Literature, and to be called "The James Coutts Scholarship"; and the second is to be awarded for distinction in the Science Course, and to be called "The John Coutts Scholarship."

(C) A sum of £1,000 from Mrs. William Grahame, of "Strathearn," Waverley, for the purpose of founding prizes, or a scholarship, or both, in Mechanical Engineering, to be called "The William and Jane Grahame Mechanical Engineering Prizes or Scholarship," as the case may be.

(D) A valuable collection of theodolites and other surveying instruments from the Honourable the Minister for Lands.

(E) A number of astronomical instruments useful for educational purposes, but not in actual use in the Sydney Observatory, from the Honourable the Minister for Public Instruction.

(F) A Hercules Direct Steam Driven Refrigerating Plant, for use in the Department of Engineering, from Mr. C. A. McDonald.

(G) A sectional working model of the Koerting Boiler Feed Injector, for use in the Engineering Department, from Messrs. H. P. Gregory and Company.

(H) Electrical Apparatus from Messrs. Crompton and Co.; Messrs. Ernest Scott and Co., Newcastle-on-Tyne; Messrs. E. Allen and Co., of Sheffield; Messrs. W. T. Glover and Co., South London; Edison and Swan Electric Light Co.; Messrs. Babcock and Willcox, Sydney; Messrs. Alexander Cowan and Sons; Le Carbonne, Great Tower-street, London; Mr. T. W. Clemens, of Melbourne; Electric Light and Traction Co. of Melbourne; Messrs. Callenders, Limited, London; Messrs. Evershed and Vignoles, of Chiswick; and Messrs. Noyes Bros., of Sydney.

35. The Annual Statements of Receipts and Expenditure, and statements showing the positions of the various funds of the University at the 31st of December, duly certified by the Auditor, David Fell, Esq., C.A.A., are appended to this report.

H. E. BARFF, Registrar.

ACCOUNTS, ETC.

RECEIPTS AND EXPENDITURE OF THE UNIVERSITY OF

Dr.

GENERAL ACCOUNT.

RECEIPTS.

	£ s. d.	£ s. d.
Balance in Commercial Banking Co. of Sydney, 31st Dec., 1904		1,796 0 3
Received from the Government of New South Wales :—		
The Statutory Endowment	10,000 0 0	
Towards Evening and Extension Lectures	1,750 0 0	
For Purchase of Scientific Apparatus	1,500 0 0	
		13,250 0 0
Received Lecture Fees	15,008 18 0	
Less paid to Professors and Lecturers	2,580 16 10	
		12,428 1 2
,, Matriculation Fees	899 17 0	
,, Degree Fees	1,266 0 0	
,, University Examination Fees	556 0 0	
,, Public Examination Fees	100 0 0	
,, Testing Fees	47 3 6	
,, Fines	12 0 0	
		2,881 0 6
,, for Pasturage		50 0 0
,, from Macleay Curatorship Fund, towards Salary of Curator of Macleay Museum		150 0 0
,, from Hovell Lectureship Fund, towards Salary of Lecturer in Geology and Physical Geography ...		158 0 0
,, from Challis Fund, towards Administration Expenses		500 0 0
		£31,213 1 11

Sydney, 27th January, 1906.—Audited and found correct.

DAVID FELL, Auditor.

PUBLIC EXAMINATIONS ACCOUNT.

RECEIPTS.

	£ s. d.
Received Candidates' Fees, Junior and Senior Public Examinations	1,525 14 7
Balance due Commercial Banking Co. of Sydney, 31st December, 1905 ...	472 13 8
	£1,998 8 3

Sydney 27th January, 1906.—Audited and found correct.

DAVID FELL, Auditor.

SYDNEY FOR THE YEAR ENDED 31ST DECEMBER, 1905.

Cr.

GENERAL ACCOUNT.

EXPENDITURE.

	£ s. d.	£ s. d.
Paid Salaries	21,409 19 4	
,, Examiners' Fees	503 17 0	
		21,913 16 4
,, Printing & Stationery, including University Calendar, and Advertising	613 1 4	
,, Repairs and Alterations, Fittings, and Furniture... ...	737 9 11	
,, Fuel and Lighting	297 14 8	
,, Fire Insurance Premiums	213 15 1	
,, Annuities' Premiums	861 0 0	
,, Rent	430 0 0	
,, Water and Sewerage Rates	324 1 5	
,, Supervision and Attendance at Examinations	59 19 3	
,, Cleaning	114 11 6	
,, Uniforms	26 0 6	
,, Postage and Duty Charges Stamps and Bank Charges ...	100 5 7	
,, Grants to University Clubs	40 0 0	
,, Miscellaneous Expenses...	74 16 8	
,, Expenses of Appointment of Lecturers	105 17 3	
		3,998 13 2
,, Scientific Apparatus, and Maintenance of Scientific Departments	2,679 13 7	
,, Microscopes... ... ... £453 0 4		
Less received 179 14 6		
	273 5 10	
		2,952 19 5
,, Grounds		444 9 0
,, Tuning Organ		25 0 0
,, University Prizes and Medals		15 0 0
,, University Extension Lecture Courses	320 6 4	
Less Fees received	236 15 0	
		83 11 4
Balance in Commercial Banking Co. of Sydney, 31st Dec., 1905		1,779 12 8
		£31,213 1 11

ROBERT A. DALLEN, ACCOUNTANT.

PUBLIC EXAMINATIONS ACCOUNT.

EXPENDITURE.

	£ s. d.
Balance due Commercial Banking Co. of Sydney, 31st December, 1904... ...	473 3 9
Paid Examiners' Fees and all other expenses in connection with the Public Examinations, and Grants towards Expenses of Local Centres ...	1,525 4 6
	£1,998 8 3

ROBERT A. DALLEN, ACCOUNTANT.

RECEIPTS AND EXPENDITURE OF THE UNIVERSITY OF

Dr.

PRIVATE FOUNDATIONS ACCOUNT.

REVENUE ACCOUNT.

RECEIPTS.

	£ s. d.	£ s. d.
Balance in Commercial Banking Co. of Sydney, 31st Dec., 1904		240 2 4
Received from the English Trustees of the Dalton Estate, balance of interest on investments after paying annuities, for Woolley Scholarship	184 14 9	
,, from the Subscribers for the foundation of the Queen Victoria Memorial Scholarship...	547 14 9	
,, from Mrs. Janet Coutts for the foundation of "The James Coutts Scholarship" and "The John Coutts Scholarship"	2,700 0 0	
,, from Mrs. William Grahame for the foundation of The William and Jane Grahame Prizes or Scholarship	1,000 0 0	
		4,432 9 6
,, from the following for Prizes :—		
Professor A. Liversidge, M.A., LL.D., F.R.S...	10 10 0	
,, T. W. Edgeworth David, B.A., F.R.S.	10 0 0	
,, M. W. MacCallum, M.A.	5 0 0	
,, F. Anderson, M.A.	23 0 0	
,, W. A. Haswell, M.A., D.Sc.... ...	5 2 0	
E. Kilburn Scott, Esq., M.I.E.E., A.M.Inst.C.E.	2 2 0	
		55 14 0
Received Income from Investments on account of the following Foundations:—		
Levey Scholarship	43 18 5	
Barker Scholarships	320 10 0	
Deas-Thomson Scholarships	157 10 4	
Cooper Scholarships	310 14 10	
Lithgow Scholarship...	101 9 8	
Renwick Scholarship	49 16 0	
Bowman Cameron Scholarship	41 1 1	
George Allen Scholarship	36 6 6	
Freemasons' Scholarship	52 1 10	
James Aitken Scholarship	51 17 9	
G. Wigram Allen Scholarship	72 3 5	
Caird Scholarship	73 18 10	
James King of Irrawang Travelling Scholarship	137 11 8	
John Harris Scholarship	45 5 0	
Council of Education Scholarship	24 13 4	
Frazer Scholarship	82 8 0	
Woolley Scholarship	42 0 1	
Garton Scholarships	100 4 0	
George and Matilda Harris Scholarship... ...	75 12 8	
Queen Victoria Memorial Scholarship	15 6 5	
Coutts Scholarship	57 6 1	
William and Jane Grahame Scholarship ...	4 18 7	
Salting Exhibition	43 2 3	
J. B. Watt Exhibitions	145 3 9	
Struth Exhibition	52 10 5	
Horner Exhibition	9 1 2	
Maurice Alexander Bursary	49 9 5	
Levey and Alexander Bursary	50 10 11	
Ernest Manson Frazer Bursary	68 10 8	
John Ewan Frazer Bursary	62 2 7	
W. C. Wentworth Bursary No. 1	41 4 9	
,, ,, No. 2	42 17 9	
Carried forward	£2,461 8 2	£4,728 5 10

SYDNEY FOR THE YEAR ENDED 31ST DECEMBER, 1905.

Cr.

PRIVATE FOUNDATIONS ACCOUNT.

REVENUE ACCOUNT.

EXPENDITURE.

	£	s.	d.	£	s.	d.
Paid Scholarships, Bursaries, Prizes, etc., as follow :—						
Levey Scholarship	40	0	0			
Barker Scholarships	100	0	0			
Deas-Thomson Scholarships	100	0	0			
Cooper Scholarships	150	0	0			
Renwick Scholarship	45	0	0			
Bowman-Cameron Scholarship	50	0	0			
George Allen Scholarship	40	0	0			
Freemasons' Scholarship	50	0	0			
G. Wigram Allen Scholarship	50	0	0			
Caird Scholarships	50	0	0			
James King of Irrawang Travelling Scholarship	130	9	10			
John Harris Scholarship	40	0	0			
Frazer Scholarship	35	0	0			
Woolley Scholarship...	150	10	6			
P. N. Russell Scholarships and Medal	539	17	6			
Garton Scholarship	30	0	0			
Queen Victoria Memorial Scholarship	20	0	0			
George and Matilda Harris Scholarship ...	50	0	0			
Salting Exhibition	25	0	0			
J. B. Watt Exhibitions	80	0	0			
Struth Exhibition	40	0	0			
Horner Exhibition	8	0	0			
Maurice Alexander Bursary	50	0	0			
Levey and Alexander Bursary	50	0	0			
Ernest Manson Frazer Bursary	50	0	0			
John Ewan Frazer Bursary	25	0	0			
W. C. Wentworth Bursary No. 1	50	0	0			
" " No. 2	50	0	0			
Burdekin Bursary	50	0	0			
Hunter-Baillie Bursaries	75	0	0			
Thomas Walker Bursaries	175	0	0			
Badham Bursary	40	0	0			
Henry Wait Bursary	30	0	0			
Wentworth Prize Medal	20	0	0			
John Fairfax Prizes	22	10	0			
John West Prize	6	0	0			
Norbert Quirk Prize	5	0	0			
Smith Prize	4	2	9			
Slade Prizes	10	0	0			
Grahame Prize Medal	4	0	0			
Collie Prize	4	0	0			
Beauchamp Prize	25	0	0			
Liversidge Prize	5	5	0			
David Prizes	10	0	0			
MacCallum Prizes	5	0	0			
Anderson Prizes	23	0	0			
Haswell Prize	4	4	0			
Cobbett Prize	5	0	0			
				2,621	19	
Paid to General Account towards Salaries :—						
Hovell Lectureship	158	0	0			
Macleay Curatorship...	150	0	0			
				308	0	0
Carried forward ..				£2,929	19	7

RECEIPTS AND EXPENDITURE OF THE UNIVERSITY OF

Dr.

PRIVATE FOUNDATIONS ACCOUNT—*Continued.*

REVENUE ACCOUNT.

RECEIPTS.	£	s.	d.	£	s.	d.
Brought forward	2,461	8	2	4,728	5	10
Received Income from Investments on acccount of the following Foundations:—						
W. C. Wentworth Bursary No. 3	49	14	9			
Burdekin Bursary	47	12	6			
Hunter-Baillie Bursaries	112	0	1			
Thomas Walker Bursaries	180	11	7			
Badham Bursary	39	17	1			
Henry Wait Bursary	44	2	1			
Duncan Bursary	39	4	3			
Wentworth Prize Medal	25	16	11			
Nicholson Medal	30	18	11			
Belmore Medal	30	15	10			
John Fairfax Prizes	23	1	1			
John West Prize	9	5	3			
Norbert Quirk Prize	6	15	10			
Smith Prize	4	14	9			
Slade Prizes	13	11	5			
Grahame Prize Medal	4	2	0			
Collie Prize	4	14	10			
Beauchamp Prize	28	15	7			
Kambala Prize	10	15	6			
Wentworth Fellowship	112	11	2			
Hovell Lectureship	143	3	6			
J. G. Raphael Foundation	4	14	10			
Fisher Estate	1,729	15	11			
Macleay Curatorship	175	17	1			
P. N. Russell Endowment	3,886	16	0			
" " Sinking Fund ...	207	8	9			
				9,428	5	8
Balance due Commercial Banking Co. of Sydney, 31st Dec., 1905				4,837	15	5
				£18,994	6	11

Sydney, 27th January, 1906.—Audited and found correct.

DAVID FELL, Auditor.

SYDNEY FOR THE YEAR ENDED 31ST DECEMBER, 1905.

Cr.

PRIVATE FOUNDATIONS ACCOUNT—*Continued.*

REVENUE ACCOUNT.

EXPENDITURE.	£	s.	d.	£	s.	d.
Brought forward ...				2,929	19	7
Paid on account of Fisher Library :—						
Librarians' Salaries	395	6	8			
Purchase of Books, Binding, etc.	1,086	15	5			
				1,482	2	1
,, on account of P. N. Russell Endowment : Salaries, Scientific Apparatus, etc. (as per annexed statement) ...				4,166	2	9
Investment Account for investment				10,416	2	6
				£18,994	6	11

ROBERT A. DALLEN, ACCOUNTANT

RECEIPTS AND EXPENDITURE OF THE UNIVERSITY OF

Dr.

INVESTMENT ACCOUNT.

	£	s.	d.
Received from Revenue Account for Investment	10,416	2	6
Principal Sum of Mortgage	800	0	0
	£11,216	2	6

Sydney, 27th January, 1906.—Audited and found correct.

DAVID FELL, Auditor.

P. N. RUSSELL ENDOWMENT.

(Included in foregoing Account.)

	£	s.	d.
Received Interest on Funded Stock	3,886	16	0
	£3,886	16	0

SINKING FUND.

Received from Endowment Fund...	140	8	0
,, Interest on Bank Investments	67	0	9
	£207	8	9

Sydney 27th January, 1906.—Audited and found correct.

DAVID FELL, Auditor.

SYDNEY FOR THE YEAR ENDED 31st DECEMBER, 1905.

Cr.

INVESTMENT ACCOUNT.

	£	s.	d.
Paid Investments—Bank Deposits	6,254	19	6
Funded Stock	800	0	0
Erection of Buildings	4,161	3	0
	£11,216	2	6

ROBERT A. DALLEN, Accountant.

P. N. RUSSELL ENDOWMENT.

(Included in foregoing Account.)

	£	s.	d.
Paid Scholarships	539	17	6
,, Salaries	2,665	11	2
,, Scientific Apparatus...	1,264	17	10
,, Expenses *re* appointment of Lecturer in Electrical Engineering ...	95	5	9
,, tenth instalment towards Sinking Fund, to defray premium on Funded Stock	140	8	0
	£4,706	0	3

Sinking Fund.

Paid Investment—Bank Deposit	221	19	6
	£221	19	6

ROBERT A. DALLEN, Accountant.

Dr.

CHALLIS FUND ACCOUNT.

Revenue Account.

Receipts.	£	s.	d.	£	s.	d.
Balance in Commercial Banking Co. of Sydney, 31st December, 1904				75	11	
Received Interest on Investments:—						
Government Stock	2,761	5	3			
Mortgages	6,029	7	10			
Bank Deposits	1,007	10	0			
Rents of Properties	1,041	6	0			
	10,839	9	1			
Less transfer to Challis Fund Special Reserve Fund	665	3	4			
				10,174	5	9
,, Profit on Sale of Funded Stock				440	4	3
				£10,690	1	6

Investment Account.

	£	s.	d.
Received from Revenue Account for Investment	1,703	10	0
,, Principal Sums of Investment:—			
Bank Deposits	49,500	0	0
Funded Stock	49,100	0	0
	£100,303	10	0

Sydney, 27th January, 1906.—Audited and found correct.

David Fell, Auditor.

CHALLIS FUND, SPECIAL RESERVE ACCOUNT.

Revenue Account.

	£	s.	d.	£	s.	d.
Received Interest on Investments:—						
Government Stock	63	19	6			
Mortgages	583	3	0			
Bank Deposits	90	0	0			
Rents of Properties	224	14	0			
				961	16	6
,, from Challis Fund, Interest over 4 per cent. on Investments for providing quinquennial increments to Professors, and for equalising income from Investments				665	3	4
,, from Challis Fund, transfer of balance of 1904				1,012	12	3
Balance due Commercial Banking Co. of Sydney, 31st Dec., 1905				521	14	4
				£3,161	6	5

Investment Account.

	£	s.	d.
Received from Revenue Account for Investment	400	0	0
,, Principal Sum of Mortgage	1,600	0	0
	£2,000	0	0

Sydney, 27th January, 1906.—Audited and found correct.

David Fell, Auditor.

OF SYDNEY FOR THE YEAR ENDED 31ST DECEMBER, 1904.

Cr.

CHALLIS FUND ACCOUNT.

REVENUE ACCOUNT.

EXPENDITURE.

	£	s.	d.
Paid Salaries ...	7,178	13	4
,, Maintenance of Challis Tomb, etc.	6	2	0
,, General Fund, towards Expenses of Administration...	500	0	0
,, Reserve Fund, transfer of balance of 1904	1,012	12	3
,, Investment Account, for Investment	1,703	10	0
Balance in Commercial Banking Co. of Sydney, 31st December, 1905 ...	289	3	11
	£10,690	1	6

INVESTMENT ACCOUNT.

	£	s.	d.
Paid Ivestments:—			
Property ...	15,903	10	0
Mortgages	84,400	0	0
	£100,303	10	0

ROBERT A. DALLEN, ACCOUNTANT.

CHALLIS FUND, SPECIAL RESERVE ACCOUNT.

REVENUE ACCOUNT.

	£	s.	d.
Balance due Commercial Banking Co. of Sydney, 31st December, 1904...	549	4	5
Paid Salaries—Quinquennial Increases...	2,212	2	0
,, Investment Account, for Investment	400	0	0
	£3,161	6	5

INVESTMENT ACCOUNT.

	£	s.	d.
Paid Investment:—			
Bank Deposit ...	2,000	0	0
	£2,000	0	0

ROBERT A. DALLEN, ACCOUNTANT.

PRIVATE FOUNDATIONS—ORIGINAL ENDOWMENTS AND CREDIT BALANCES AT 31ST DECEMBER, 1905.

Name of Foundation.	Original Amount of Endowment.			Ledger Account. Cr. Balance.		
	£	s.	d.	£	s.	d.
Levey Scholarship	500	0	0	1,048	5	6
Barker Scholarships	1,000	0	0	3,598	9	3
Deas-Thomson Scholarships	1,000	0	0	2,623	18	1
Wentworth Prize Medal	200	0	0	631	15	6
Cooper Scholarships	1,000	0	0	3,626	10	11
Salting Exhibition	500	0	0	916	8	9
Wentworth Fellowship	445	0	0	2,699	2	8
Lithgow Scholarship	1,000	0	0	2,559	6	5
Nicholson Medal	200	0	0	762	2	8
Belmore Medal	300	0	0	763	0	0
John Fairfax Prizes	500	0	0	534	5	1
Maurice Alexander Bursary	1,000	0	0	1,159	1	0
Levey and Alexander Bursary	1,000	0	0	1,185	2	1
John West Prize	200	0	0	218	2	2
Ernest Manson Frazer Bursary	1,250	0	0	1,684	3	2
John Ewan Frazer Bursary	1,250	0	0	1,584	5	8
W. C. Wentworth Bursary, No. 1				1,000	0	0
W. C. Wentworth Bursary, No. 2	2,500	0	0	1,000	0	0
W. C. Wentworth Bursary, No. 3				1,197	10	7
Burdekin Bursary	1,000	0	0	1,109	6	4
Hunter-Baillie Bursaries	2,000	0	0	2,677	17	7
J. B. Watt Exhibitions	3,000	0	0	3,995	0	11
Renwick Scholarship	1,000	0	0	1,126	1	2
Bowman-Cameron Scholarship	1,000	0	0	949	13	0
Hovell Lectureship	6,000	0	0	6,015	15	3
George Allen Scholarship	1,000	0	0	1,066	5	1
Freemasons' Scholarship	1,000	0	0	1,276	17	0
J. G. Raphael Foundation	43	0	4	114	8	9
James Aitken Scholarship	1,000	0	0	1,309	14	11
Thomas Walker Bursaries	5,000	0	0	5,213	19	4
G. Wigram Allen Scholarship	1,000	0	0	1,740	17	2
Struth Exhibition	1,000	0	0	1,248	14	0
Fisher Estate	30,000	0	0	42,085	17	5
Norbert Quirk Prize	143	12	6	162	1	2
Smith Prize	100	0	0	110	7	10
Badham Bursary	1,000	0	0	949	19	6
Slade Prizes	250	0	0	319	16	10
Caird Scholarship	1,000	0	0	1,776	0	7
James King of Irrawang Scholarship ...	4,000	0	0	4,467	14	2
,, ,, ,, Bursary	881	0	0	783	14	6
Macleay Curatorship	6,000	0	0	5,977	13	8
John Harris Scholarship	1,000	0	0	1,062	8	10
Horner Exhibition	200	0	0	215	16	8
Council of Education Scholarship	290	10	1	598	3	10
Frazer Scholarship	2,000	0	0	2,450	2	8
Grahame Prize Medal	100	0	0	95	0	0
Collie Prize	100	0	0	111	1	0
Woolley Scholarship	990	6	3	1,037	11	10
P. N. Russell Fund	100,000	0	0	96,633	7	9
,, ,, Sinking Fund	—			1,663	3	7
Garton Scholarships	2,050	0	0	2,398	16	5
Henry Wait Bursary	1,000	0	0	1,040	9	9
George and Matilda Harris Scholarship ...	1,700	0	0	1,787	3	3
Duncan Bursary	808	19	6	950	10	10
Beauchamp Prize	600	0	0	724	18	9
Kambala Prize	250	0	0	263	13	6
Queen Victoria Memorial Scholarship ...	547	14	9	543	1	2
Coutts Scholarships	2,700	0	0	2,757	6	1
William and James Grahame Scholarships ...	1,000	0	0	1,004	18	7
Private Annual Prizes in Trust	36	4	2	36	4	2
Challis Fund	224,362	10	0	231,517	13	11
,, ,, Special Reserve Fund	—			22,258	5	8
	£420,998	17	7	£482,419	3	11

ROBERT A. DALLEN, Accountant.

UNIVERSITY CLUBS, ETC.

SYDNEY UNIVERSITY UNDERGRADUATES' ASSOCIATION.

OFFICE BEARERS FOR 1906.

PRESIDENT—J. P. Tivey, B.A.

VICE-PRESIDENTS—G. V. Portus, B.A., F. Craig, R. L. de T. Prevost.

HON. SECRETARIES—H. J. R. Clayton, C. J. Weedon.

HON. TREASURER—J. Atkinson.

COMMITTEE—A. L. Campbell, E. A. Tivey, H. S. Utz, F. M. McKeown, J. Russell-Jones, G. C. Byrne, N. G. Ducker, P. R. Walls, B.A., A. MacInnes, B.A., H. G. Carter, R. G. Waddy, W. F. Matthews, G. Howatson, S. Stokes, R. St. V. Welch, T. R. Spence, R. L. Hittman.

SYDNEY UNIVERSITY SPORTS UNION.

The Union has been formed by the amalgamation of the existing Football, Cricket, Boat, Athletic, Tennis and Baseball Clubs. Such other Clubs as may from time to time be approved by the Committee shall be admitted.

Membership.—Any person who shall have matriculated according to the by-laws of the University of Sydney, and shall be proceeding to a degree at such University, and any graduate of the said or any other recognised University, or any member of Convocation of the University of Sydney, shall be eligible for membership. Any undergraduate who has attended lectures for at least six (6) consecutive terms shall be entitled to continue his membership, and nothing in this rule shall affect any member at the date of the passing thereof (April 6th, 1903).

Annual Subscription.—The annual subscription to the Sports Union for full active members shall be £2 2s. per annum, and for honorary members £1 1s. Ladies who comply with the provisions of the above rule as to membership may become members on payment of an annual subscription of £1 1s. Any person eligible for membership may become a life member on payment of £15 15s.; a life honorary member on payment of £10 10s. A life member of any constituent club at the time of amalgamation shall continue a life member of that club, and shall be made a life member of the Sports Union on payment of an additional subscription to be fixed in each case by the Committee. Any member who shall have paid the aggregate sum of 25 guineas in annual subscriptions shall forthwith become entitled to life membership.

The Oval.—The Oval is controlled and managed by a Ground Committee of five (5), appointed annually by the General Committee.

OFFICE BEARERS FOR 1906.

PATRON—The Hon. Sir Normand MacLaurin, M.A., M.D., LL.D., Chancellor.

PRESIDENT—H. F. Maxwell, B.A.

VICE-PRESIDENTS—His Honour Judge Backhouse, M.A., H. E. Barff, M.A., H. M. Faithfull, M.A., E. W. Knox, Professor Pollock, D.Sc., C. H. Helsham, B.A., J. S. Cargill, B.A., H. Marks, B.A., I. G. Mackay, B.A., F. D. Kent, M.A.

HON. TREASURERS—H. M. Stephen, B.A., LL.B., A. G. M. Pitt, B.A., LL.B., O. A. Ireland, F. C. Rogers.

HON. SECRETARY—E. A. Brearley, B.A.

GENERAL COMMITTEE—V. V. Nathan, G. Howatson, A. D. Fisher, J. Hoets, R. G. Waddy, S. D. Webb, F. W. Broughton, K. M. Niall, A. D. Walker, E. E. I. Body, G. V. Portus, G. G. Nathan, W. F. Matthews, H. G. Allen.

GROUNDS COMMITTEE—J. S. Cargill, B.A. (Chairman), C. A. Sinclair, B.A., LL.B., E. E. I. Body, F. L. Ash, G. V. Portus (Secretary).

SYDNEY UNIVERSITY ATHLETIC CLUB.

OFFICE BEARERS FOR 1906.

PATRON—The Chancellor of the University.

PRESIDENT—Professor Anderson, M.A.

VICE-PRESIDENTS—Professor David, Professor Pollock, R. Coombes, V. S. Futter, H. E. Barff, W. H. Savigny, G. P. Barbour, H. Wood.

HON. SECRETARIES—R. G. Waddy, B. R. French.

HON. TREASURER—S. D. Webb.

DELEGATES TO S.U. SPORTS UNION—R. G. Waddy, S. D. Webb.

DELEGATES TO N.S.W.A.A.A.—R. G. Waddy, B. R. French, G. V. Portus, C. P. Stewart.

GENERAL COMMITTEE—Messrs. N. G. Ducker, J. Luddy, H. G. Allen, C. P. Stewart, H. Waddell, N. C. Barker, F. L. Ash, C. W. Roe.

UNIVERSITY BASEBALL CLUB.

Founded 1904.

OFFICE BEARERS FOR 1906.

PRESIDENT—H. E. Barff, M.A.

VICE-PRESIDENTS—Professor Liversidge, Professor Pollock, Professor Welsh, Professor Anderson, Messrs. G. P. Barbour, C. A. Buchanan, J. S. Harris, M.B., Ch.M., H. Donovan, M.B.

SECRETARY—1st IX., R. S. Candlish; 2nd IX., H. Poate.

TREASURER—F. Broughton.

DELEGATES TO N.S.W.B.A.—V. O. Stacy, R. S. Candlish.

DELEGATES TO S.U.S.U.—H. G. Allen, F. Broughton.

GENERAL COMMITTEE—H. G. Allen, R. S. Candlish, R. Garnock, H. Poate, V. Read, F. C. Rogers, V. O. Stacy.

SELECTION COMMITTEE—1st IX., H. G. Allen, R. Harvey, F. C. Rogers; 2nd IX., R. Garnock, H. Poate, J. Shellshear.

SYDNEY UNIVERSITY BOAT CLUB.

All members of the Sports Union are members of the Boat Club. The boat shed of the Club is now situated in Blackwattle Bay.

OFFICE BEARERS FOR 1906.

PATRON—His Honour Judge Backhouse, M.A.

PRESIDENT—W. T. Coyle, B.A.

VICE-PRESIDENTS—A. G. Purves, A. Consett Stephen, W. H. Palmer, A. MacCormick, M.D., C. H. Cropper, B.E., C. H. Helsham, B.A., L. R. Woodcock, B.E., E. M. Mitchell, B.A., LL.B., H. W. Kendall, M.B., Professor Pollock, D.Sc.

CAPTAIN—V. V. Nathan.

VICE-CAPTAIN—K. Smith.

HON. SECRETARY—A. Morrison.

HON. TREASURER—G. Howatson.

COMMITTEE—O. A. Ireland, F. Coen, B.A., G. B. Lindeman, J. S. Dixson, E. W. Marriott, K. M. Whiting.

TRUSTEES—H. E. Barff, M.A., Robert Smith, M.A.

DELEGATES TO N.S.W. R.A.—W. T. Coyle, B.A., V. V. Nathan, A. G. de L. Arnold.

DELEGATES TO SPORTS UNION—V. V. Nathan, G. Howatson (*ex officio*).

HON. MEDICAL OFFICER—G. H. S. Lightoller, M.B., Ch.M.

SYDNEY UNIVERSITY CRICKET CLUB.

This Club was established in the year 1865. All members of the Sports Union are Members of the Cricket Club. The Senate has granted to the

Club the use of that portion of the University grounds known as the "Oval." A considerable sum of money has been spent upon this ground, and a handsome pavilion has been erected upon it. Practice is carried on daily (Wednesdays excepted) from October to April (inclusive) on the Oval.

The last match against Melbourne University Cricket Club, the 26th of the series, was played in Melbourne, and was lost.

OFFICE BEARERS FOR 1906.

PRESIDENT—H. M. Faithfull, M.A.

VICE-PRESIDENTS—H. E. Barff, M.A., John Harris, E. F. Waddy, B.A., C. A. Sinclair, B.A., LL.B., E. W. Knox, H. M. Stephen, B.A., LL.B., Dr. H. S. Stacey, Dr. H. L. Maitland.

HON. SECRETARY—W. F. Matthews.

ASSISTANT HON. SECRETARY 2ND XI.—G. G. Nathan.
,, ,, ,, 3RD XI.—V. O. Stacy.
,, ,, ,, VETERANS—P. H. Mills.
,, ,, ,, WEDNESDAY TEAM—H. J. R. Clayton.

HON. TREASURER—G. G. Nathan.

DELEGATES TO S.U.S.U.—W. F. Matthews, G. G. Nathan.

DELEGATES TO N.S.W.C.A.—H. M. Stephen, B.A., LL.B., C. A. Sinclair, B.A., LL.B.

DELEGATES TO C.S.C.A.—P. H. Mills, C. A. Sinclair, B.A., LL.B.

COMMITTEE—H. Marks, B.A., P. S. Jones, M.B., H. D. Wood, G. P. Sapsford, J. S. Harris, F. C. Rogers, A. P. Penman, Dr. P. S. Jones.

SELECTION COMMITTEES—1ST XI.: E. E. I. Body, F. C. Rogers, A. P. Penman. 2ND XI.: G. G. Nathan, J. B. Lane, W. F. Matthews. 3RD XI.: V. O. Stacy, H. J. R. Clayton, J. R. van Hoets. VETERANS XI.: H. Marks, C. A. Sinclair, P. H. Mills. WEDNESDAY TEAM: H. J. R. Clayton, F. C. Rogers.

UNIVERSITY FOOTBALL CLUB.

This Club was formed in 1863. Matches are played every Saturday and Wednesday during the season, which lasts from April till September. All members of the Sports Union are members of the Football Club.

OFFICE BEARERS FOR 1906.

PATRON—The Hon. Sir Normand MacLaurin, M.L.C., M.D., LL.D.

PRESIDENT—Hyam Marks, B.A.

VICE-PRESIDENTS—H. E. Barff, M.A., Professor David, F.R.S., I. G. Mackay, B.A., G. P. Barbour, M.A., A. J. Aspinall, M.B., Ch.M., W. J. White, A. B. Penman, B.A.

GENERAL COMMITTEE—J. W. G. Powell, B.A., W. F. Matthews, G. V. Portus, B.A., J. W. Hoets, H. J. R. Clayton.

SELECTION COMMITTEE—1ST XV.: N. R. Johnson, W. F. Matthews, J. W. Hoets. 2ND XV.: Jno. Hughes, B.A., J. B. Lane, H. J. R. Clayton. 3RD XV.: J. Russell-Jones, A. Curtin, H. J. Clayton. WEDNESDAY TEAM: N. Mulligan, J. Waugh, L. McLennon.

HON. TREASURER—A. D. Fisher, B.A.

DELEGATE TO SPORTS UNION—J. W. Hoets.

DELEGATES TO METROPOLITAN RUGBY UNION—G. P. Barbour, M.A., N. R. Johnson, I. G. Mackay, B.A.

REPRESENTATIVE ON COMMITTEE OF METROPOLITAN RUGBY UNION—Hyam Marks, B.A.

HON. SECRETARIES—First XV.: F. Coen, B.A. Second XV.: J. B. Lane. Third XV.: J. Russell-Jones. Wednesday Team: N. Mulligan.

SYDNEY UNIVERSITY TENNIS CLUB.

This Club was established in September, 1885. All members of the Sports Union are also members of the Tennis Club.

OFFICE BEARERS FOR 1906.

PATRON—The Hon. Sir Normand MacLaurin, M.A., LL.D., M.D.

PRESIDENT—G. W. Waddell, M.A., LL.D.

VICE-PRESIDENTS—H. E. Barff, M.A., Professor Carslaw, D.Sc., Dr. J. N. Griffiths, M. L. MacCallum, B.A., A. G. M. Pitt, B.A., LL.B., Dr. E. O. Pockley, Professor Pollock, D.Sc., Dr. G. G. Sharp.

HON. SECRETARY—A. D. Walker.

HON. TREASURER—K. M. Niall.

DELEGATES TO N.S.W.L.T.A.—E. N. B. Docker and A. D. Walker.

DELEGATES TO S.U.S.U.—K. M. Niall and A. D. Walker.

COMMITTEE—E. N. B. Docker, H. Frew, H. Hicks, C. N. Pitt, C. A. Verge, H. K. Ward.

SYDNEY UNIVERSITY SCOUTS RIFLE CLUB.

The Club was formed in connection with the Sydney University Scouts. The object of the Rifle Club is to promote rifle shooting amongst the members of the Sydney University Scouts. Members of Sydney University Scouts are eligible for membership, also University officials and such honorary members as may be elected by the committee. The subscription is 2s. 6d. per term, in advance. The membership roll totals 85. There are three shoots (6 ranges) per term.

OFFICE BEARERS FOR 1906.

PATRON—The Hon. Sir Normand MacLaurin, M.A., LL.D., M.D.

PRESIDENT—Major R. C. Simpson, commanding Sydney University Scouts.

VICE-PRESIDENTS—Major-General Finn, Brig.-General Gordon, Colonels Lyster and Mort, Lieutenants-Colonel Stanley, Bartlett, Campbell and Holmes, Majors Wallace Brown, Legge, Luscombe and Smail, Captains Wilson, Flashman and Hanna, Lieutenants Lord, Edgley, Patterson, Gibson, Hewitt, Barraclough, Martyn, Smail, Denham, Vine-Hall and Mort, Professors MacCallum, David, Carslaw, Warren, Anderson, Liversidge, Pollock and Woodhouse, H. E. Barff, M.A., E. M. Mitchell, B.A, LL.B., E. Kilburn Scott, V. V. Nathan, H. Brooks, B.E.

CAPTAIN—Lieutenant Mort.

HON. SECRETARIES—Sergeant Patterson and Corporal Mills.

HON. TREASURER—Sergeant Smyth, J.S.

COMMITTEE—Senior Colour-Sergeant Foley, Sergeant Garnock, Sergeant Finckh, Corporal Waddy, Corporal Mackenzie, Lance-Corporal French, Private Bundock.

SYDNEY UNIVERSITY MEN'S CHRISTIAN UNION.

The Sydney University Christian Union was founded on May 19th, 1896.

This Union is a branch of the Australasian Student Christian Union, which in its turn is a branch of the World's Students Christian Federation. This federation is composed of 1825 associations, with an aggregate membership of over 103,000. The federation has made all the student movements of the world better acquainted with each other by establishing among them practical means of communication, such as world's conferences, inter-visitation, correspondence, and interchange of publications.

Its objects may be gathered from Article II. of the Constitution:—

"To strengthen the bonds of union among Christian students; to influence fellow-students to become followers of Christ; to deepen the spiritual life of students; to promote Christian work, especially by and for students; to lead students as they go forth from the University to place their lives where they will be most useful in extending the Kingdom of Christ."

Public meetings are held on Tuesdays, at 1.30 p.m. Evening Meetings are occasionally arranged. Bible Classes are arranged weekly for the different faculties. Classes are also arranged fortnightly for studying the progress which Christianity is making throughout the world.

The Union is in possession of a library, which contains many standard works on the religious problems of the day.

Membership—which is of two kinds, active and associate—is open to all members of the University. Subscription, 2s. 6d. per annum.

Until 1903 the Union included both the men's and women's branches; but at the annual meeting of October, 1904, these two branches were separated to form two distinct self-governing unions, each with its own constitution. The annual meeting of the Union is held in the second week of Third Term, at which the executive officers are elected to serve for one year.

OFFICE BEARERS FOR 1906.

PRESIDENT—H. W. Flashman.

VICE-PRESIDENT—B. B. Chapman.

CORRESPONDING SECRETARY—H. K. Archdall.

RECORDING SECRETARY—W. L. Ada.

TREASURER—O. G. Dent.

CHAIRMEN OF COMMITTEES—H. G. Edwards (Membership), B. B. Chapman (Handbook), F. North (Bible Study), H. W. Whyte (Missionary), A. J. Mills (Lads' Club), S. Castlehow ("Intercollegian").

SYDNEY UNIVERSITY CITY LADS' CLUB.

The Club is a branch of the Students' Christian Union, and now carries on the work of the late Sydney University and City League formed in 1901. The object is to regularly influence boys who are not touched by any other organisation. The work is carried on every Friday and Wednesday evenings at the Sydney City Mission Hall, Lower Fort Street.

OFFICE BEARERS FOR 1906.

GRADUATE MANAGER—J. Paterson, B.A.

COMMITTEE—A. J. Mills (Chairman), H. K. Archdall, B. B. Chapman, C. E. Weatherburn, M.A., B. L. Webb, B.A.

SYDNEY UNIVERSITY AMATEUR DRAMATIC SOCIETY.

This Society was founded in 1899, in order to cultivate the histrionic powers of members of the University. It also aims at getting somewhat away from the ordinary run of "amateur performances" in the presentation of plays of value and importance such as are not usually seen in Sydney.

The subscription to the Society is 2s. 6d. per term.

Until last September some two years had elapsed without a performance, but the Society was then re-organised, and produced "The School for Scandal" with much success. The Society affords great opportunities to those who wish to become familiar with some of the works of our leading writers, and extends a welcome to freshmen.

HON. SECRETARIES FOR 1906—Miss Ward and G. G. Nathan.

SYDNEY UNIVERSITY ENGINEERING SOCIETY.

The object of the Society is to promote the welfare of the Department of Engineering by bringing into closer association the Graduates and Undergraduates in Engineering, by the reading of papers and the delivery of

lectures on professional subjects, and by such other similar means as may be approved of by the Council of the Society. Membership is open to all students in the Faculty of Science, whether matriculated or not, also to members of the teaching staff and graduates in Science or Engineering. The subscription is 10s. 6d. per annum (including proceedings), payable before the beginning of May. The Society offers an annual prize of the value of £2 2s. for the best paper on original research, work and design contributed by an undergraduate during the year.

PRIZE, 1905—J. M. Bridge ("Slime Treatment at Mount Boppy").

OFFICE BEARERS FOR 1906.

PRESIDENT—G. A. Waterhouse, B.Sc., F.L.S.

VICE-PRESIDENTS—R. J. Boyd, B.E., H. S. Mort, B.Sc., A. M. Martyn, B.E., F. Danvers Power, A.R.S.M.

HON. TREASURER—J. J. C. Bradfield, M.E.

ASSISTANT HON. TREASURER—J. Atkinson.

HON. SECRETARY—A. J. Gibson, Assoc. M. Inst. C.E.

HON. ASSISTANT SECRETARY—J. P. Tivey, B.A.

COUNCIL—J. N. C. MacTaggart, T. P. Strickland, J. W. Roberts (*ex officio*), W. E. Cook, H. M. Myers, S. W. Jones, H. G. Carter, H. J. Swain, A. Morrison, G. A. Howatson.

SYDNEY UNIVERSITY EVENING STUDENTS' ASSOCIATION.

This Association was founded in April, 1900, with the object of promoting social relations among Evening Students, past and present.

OFFICE BEARERS FOR 1906.

PATRON—N. J. Gough, B.A.

PRESIDENT—R. G. Newton. B.A.

VICE-PRESIDENTS—Messrs. Spence, B.A., Lovell, B.A., Walker, B.A., Artlett, B.A.

HON. SECRETARY—A. J. Reynolds.

HON. TREASURER—H. Chandler.

REPRESENTATIVES.—Third Year: G. Mackaness. Second Year: V. Miles. First Year: J. Macaulay.

SYDNEY UNIVERSITY LAW SOCIETY.

This Society was formed in Lent Term, 1902. The following persons are eligible for membership on election by the Committee, and payment of an annual subscription of 5s.:—(1) Any Graduate in Law; (2) any Graduate of the University who is a Barrister or Attorney of the Supreme Court of

New South Wales or Queensland, or any Articled Clerk or Student-at-Law in New South Wales; (3) any person attending lectures in the Faculty of Law. The rooms of the Society are situated in Selborne Chambers, Phillip Street, City.

OFFICE BEARERS FOR 1906.

PATRON—Professor Pitt Cobbett, M.A., D.C.L.

PRESIDENT—A. B. Piddington, B.A.

VICE-PRESIDENTS—T. R. Bavin, B.A., LL.B., D. Ferguson, B.A., F. D. Kent, M.A., E. M. Mitchell, B.A., LL.B. J. B. Peden, B.A., LL.B.

COMMITTEE—H. J. R. Clayton, A. D. Fisher, B.A., J. F. Lydall, R. S. Murray-Prior, B.A., E. T. Real, B.A.

HON. SECRETARIES—N. de H. Rowland, B.A., LL.B., J Hughes, B.A.

HON. TREASURER—V. Haigh B.A.

HON. AUDITORS—J. A. Ferguson, B.A., LL.B., C. Breckenridge, LL.B.

UNIVERSITY OF SYDNEY MEDICAL SOCIETY.

The objects of this Society, which was founded in 1885, are the intellectual and social improvement of its members, by lectures, essays, and discussions, in any branch of Medical Science, and by any other means calculated to advance the objects of the Society.

The Annual General Meeting is held early in Lent Term. Ordinary general meetings are held twice in Lent Term, three times in Trinity Term, and once in Michaelmas Term, in the Harveian Theatre. At the last meeting in Trinity Term an address is delivered by some eminent physician or surgeon on some subject of special interest.

Two undergraduate meetings are held during the year, at which papers are read by undergraduates.

An annual dinner is held during Trinity Term.

All teachers in the Faculty of Medicine are honorary members *ex officio*. All Students of Medicine, or qualified Medical Practitioners, whose qualifications are recognised by the University of Sydney, are eligible for ordinary membership.

The transactions of the Society, together with other matters of Medical interest, are published in the Society's Journal once a year.

OFFICE BEARERS FOR 1906.

PRESIDENT—T. C. Parkinson, M.B., Ch.M.

VICE-PRESIDENTS—A. J. Aspinall, M.B., Ch.M., J. M. MacEncroe, M.B., Ch.M., H. T. C. MacCulloch, M.B., Ch.M., H. R. G. Poate, E. A. Brearley, B.A.

HON. SECRETARY—A. MacInnes, B.A.

HON. TREASURER—M. Archdall.

HON. LIBRARIAN—J. L. Shellshear.

HON. AUDITORS—E. J. Day, M.B., Ch.M., F. Craig.

EDITORIAL COMMITTEE FOR SOCIETY'S JOURNAL—J. B. St. Vincent Welch, M.B., Ch.M. Assistant Editors: E. A. Brearley, B.A., G. A. Brookes.

COUNCIL—5th Year: A. B. Steele. 4th Year; A. E. Colvin. 3rd Year: K. Smith. 2nd Year: W. F. Matthews. 1st Year: G. C. Byrne.

SYDNEY UNIVERSITY PHILOSOPHICAL SOCIETY.

This Society was inaugurated on November 12th, 1901, when a meeting of Graduates and Undergraduates was held to draw up a constitution and elect officers. The object of the Society is to promote interest in the study of Philosophy. To effect this, meetings are held on the third Monday of every month, at which informal discussions on philosophical problems and difficulties take place; and, in addition, an annual re-union of past and present students of Philosophy is to be arranged. The subscription fee is 2s 6d per annum. The meetings are held in Selborne Chambers, Philip Street, City.

OFFICE BEARERS FOR 1906.

PATRON—Professor F. Anderson, M.A.

PRESIDENT—Rev. M. Scott Fletcher, M.A.

TREASURER—J. Paterson, B.A.

SECRETARY—C. H. Northcott, B.A. (Address: North Avenue, Leichhardt.)

SYDNEY UNIVERSITY SCIENCE SOCIETY.

The objects of this Society, which was founded in August, 1904, are:

1. To promote the study of natural science for its own sake by means of papers, exhibits, discussions, and lectures on subjects of general scientific interest, and by geological, biological and other excursions which may be of assistance to students in their studies.

2. To encourage originality, and stimulate the spirit of research amongst students.

3. To give the students and the teaching staff an opportunity to meet on equal footing to discuss scientific knowledge for mutual benefit and instruction.

All students and ex-students of the Sydney University and all members of the teaching staff of the University are eligible for membership.

The subscription to the Society is 5s per annum, payable in March. All subjects taught in the curriculum of the faculty of Science (not including

Engineering) fall within the scope of the Society. Papers may be read by any member of the Society, provided due notice has been given to the Council.

Monthly meetings are held on the third Wednesday of each month at 8 p.m., and monthly exoursions are held on days fixed by the Council.

During the past successful year lectures dealing with Radio activity, Ore deposits, Evolution of Mammals and Meteorology, among many other interesting subjects, were given before the Society, and excursions of Biological, Geological and Chemical interest were held frequently.

All students interested in any branch of Science are strongly recommended to join the Society, since it has been the experience of members that the matter discussed before the Society is of direct assistance in the various science examinations.

OFFICE BEARERS FOR 1905-6.

PRESIDENT—T. H. Laby.

VICE-PRESIDENTS—J. P. Hill, D.Sc., Professor David, F.R.S., Professor Haswell, F.R.S., Dr. Sandes, Dr. Chapman.

HON. TREASURER—J. M. Petrie, D.Sc.

HON. SECRETARIES—T. G. Taylor, B.Sc., B.E., E. J. Goddard, B.A., B.Sc.

COUNCIL—W. G. Woolnough, D.Sc., O. U. Vonwiller, B.Sc., S. J. Johnstone, B.A., B.Sc., G. J. Gray, B.Sc., B.E., R. S. Bonney, B.A., H. L. Kesteven, J. Atkinson.

SYDNEY UNIVERSITY UNION.

The object of the Union, which was founded in 1874, is the promotion of the mental culture and fellowship of its members by means of Debates, Lectures, Reading of Papers, etc. The meetings are held at the University every Friday evening at 8 p.m. Past and Present Members meet at the Annual Dinner, which is held during Lent Term. The Professors, Lecturers, and Examiners of the Sydney University are *ex officio* Honorary Members. All other members of the University, or student attending lectures, or fellow or councillor or student of an affiliated college, may become a member of the Union by paying his subscription to the Treasurer. Except in the case of members of other Universities, the formality of an election is dispensed with. Subscription, 2s. 6d. per annum. Life Membership is obtained on the payment of four annual subscriptions. The Union year now begins in Trinity Term.

OFFICE BEARERS FOR 1905-6.

PRESIDENT—N. J. Gough, B.A.

VICE-PRESIDENT—D. Wilson, M.A.

HON. SECRETARIES—R. S. Murray-Prior, B.A., M. L. MacCallum, B.A.

HON. TREASURER—R. S. Bonney, B.A.

COMMITTEE—C. St. L. Willis, H. L. Kesteven, N. G. McWilliam, B.A., LL.B., H. L. Thompson, H. K. Archdall.

SYDNEY UNIVERSITY WOMEN-UNDERGRADUATES' ASSOCIATION.

OFFICE BEARERS FOR 1906.

PRESIDENT—Aphra F. Scroder.

VICE-PRESIDENTS—Birdie K. Brodziak, Mabel L. Dunlop.

HON. SECRETARY—Lavinia Clouston.

HON. TREASURER—Hilda Alexander.

COMMITTEE—Florence Campbell, Nellie Lodder, Irene F. Perry, Grace M. Free, Clara Smith.

UNIVERSITY WOMEN'S BOAT CLUB.

OFFICE BEARERS FOR 1906.

PRESIDENT—Miss I. M. Fidler, B.A.

VICE-PRESIDENTS—Mrs. Wood, B.A., Miss C. Muriel Rutherford, B.A.

CAPTAIN—Miss Dickenson.

HON. SECRETARY—F. Ida Bourne.

HON. TREASURER—Nina B. Brierley.

COMMITTEE—Myril Bowman, Margaret E. David, E. M. Little, G. E. Jones, Emma Noad.

LADIES' TENNIS CLUB.

OFFICE BEARERS FOR 1906.

PATRONESS—Lady MacLaurin.

PRESIDENT—Mrs. MacCallum.

VICE-PRESIDENTS—Mrs. Wood, Miss Fidler, B.A., Mrs. Haswell, Mrs. David.

HON. SECRETARY—Lavinia Clouston.

HON. TREASURER—Birdie K. Brodziak.

COMMITTEE—Mabel H. Robinson, Hilda M. Young, Hilda Alexander, Tib Bennett, Enid McDonald, Muriel Ramsay.

SYDNEY UNIVERSITY WOMEN'S CHRISTIAN UNION.

OFFICE BEARERS FOR 1906.

PRESIDENT—Aphra F. Scroder.

VICE-PRESIDENT—Lavinia Clouston.

CORRESPONDING SECRETARY—Monica Flower.

RECORDING SECRETARY—Myril M. Bowman.

ASSISTANT SECRETARY—Alison M. Marsh.

TREASURER—Sidwell Bennet.

MISSIONARY SETTLEMENT FOR UNIVERSITY WOMEN.

(SYDNEY UNIVERSITY BRANCH.)

The Missionary Settlement for University Women was founded in Bombay in 1895. Its aim is fourfold:—1. To reach the women students of India. 2. To reach the higher class Parsi women and girls who are not yet students. 3. To meet the growing demand for women's education in India by providing Christian and not merely secular teaching. 4. To arouse and foster more missionary interest among the women students of Great Britain, and to band them together in a united effort by providing a definite outlet for their interest.

Branches exist in each of the Australian Universities, each State having its State Secretary, while the whole movement in Australia is under the direction of a General Secretary elected by the State Executives. A number of branches have also been established in the Secondary Schools. Australia is represented in the work by a settler, Miss Elsie Nicol, M.A. (Melbourne), who is the head of the Student Hostel at Madras. The claims of the M.S.U.W. are urged upon new students as a movement which in its origin and aims must peculiarly appeal to them as students. The Undergraduate officers for 1905-6 are:—

SECRETARY—Hilda Alexander.

TREASURER—Alice Deffell.

SYDNEY UNIVERSITY WOMEN'S ASSOCIATION.

This Association was founded in May, 1892, with the aim of bringing all women Graduates and Undergraduates together from time to time for social and intellectual purposes, and of taking cognizance of all matters affecting their well-being.

OFFICE BEARERS FOR 1906.

PRESIDENT—Mrs. Wood, B.A.

HON. SECRETARY—Miss Roberta Reid, B.A.

HON. TREASURER—Miss Isabel Davis.

COMMITTEE—Mrs. Horder, B.A., Miss Parsons, B.A., Miss D. K. Murray-Prior, B.A., Miss B. Ward; *ex officio* members: Miss I. M. Fidler, B.A., Miss MacInnes, B.A., Miss Brierley.

DELEGATE TO THE NATIONAL COUNCIL OF WOMEN—Miss Roberta Reid, B.A.

SYDNEY UNIVERSITY WOMEN'S SOCIETY.

The object of this Society is, as far as lies in its power, to help those requiring and deserving help. All women members of the University of Sydney are eligible for membership. Honorary members may be admitted by consent of a general meeting. Subscription, 1s. 6d. per Term.

FOUNDRESS—The Countess of Jersey.

OFFICE BEARERS FOR 1905.

PATRONESS—Miss Rawson.

PRESIDENT—Lady Manning.

VICE-PRESIDENTS—Mrs. Wilson, Mrs. Welsh, Miss Fidler, Miss Newell, Mrs. Hey Sharp, Mrs. Gordon Craig.

REPRESENTATIVES—Girls' Club, Miss Macdonald, M.A.; Newington Asylum, Miss S. O. Brennan, M.A., B.Sc.

HON. SECRETARY—Miss Henry, B.A.

HON. ASSISTANT SECRETARY—Miss Cohen.

HON. TREASURER—Miss Skillman, B.A.

COMMITTEE—Miss Watson, B.A., Miss Fitzhardinge., B.A., Miss Lion, Miss Lyons, B.A., Miss Morley, Miss De Putron, Miss Fell, B.A.

APPENDIX.

*EXAMINATION PAPERS

DECEMBER, 1905.

FACULTY OF ARTS.

FIRST YEAR EXAMINATION.

ENGLISH.

PASS.

(*a*) SHAKESPEARE.

1. Explain fully, briefly noting the context, the following passages—

(*a*) The untented woundings of a father's curse
Pierce every sense about thee.

(*b*) A base, proud, shallow, beggarly, three-suited, hundred-pound, filthy, worsted-stocking knave; a lily-livered, action-taking knave; a glass-gazing superserviceable finical rogue: . . . one whom I will beat into a clamorous whining, if thou deniest the least syllable of thy addition.

(*c*) 'Tis not in thee . . .
To bandy hasty words, to scant my sizes,
And in conclusion to oppose the bolt
Against my coming in.

(*d*) Court holy-water in a dry house is better than this rain-water out o' door.

(*e*) If wolves had at thy gate howl'd that stern time,
Thou shouldst have said, 'Good porter, turn the key,'
All cruels else subscribed.

(*f*) Chill pick your teeth, zir; come; no matter vor your foins.

*The time allowed for each paper is three hours, except where otherwise stated.

2. Explain the grammatical peculiarities of the following—

   (*a*) The jewels of our father, with wash'd eyes
   Cordelia leaves you.

   (*b*) The hedge-sparrow fed the cuckoo so long,
   That it had it head bit off by it young.

   (*c*) He childed as I father'd.

   And the metrical peculiarities of the following—

   (*a*) Which of convenience will not allow.

   (*b*) The sway revenue, execution of the rest.

   (*c*) A plague-sore, an embossed carbuncle.

3. What light do the following passages respectively throw on the characteristics—

   (*a*) *Of Cordelia.*

   Is it but this—a tardiness of nature
   Which often leaves the history unspoke
   That it intends to do.

   (*b*) *Of Lear.*

   Thou shall find
   That I'll resume the shape which thou dost think
   I have cast off for ever.

   (*c*) *Of Goneril and Regan.*

   She's as like this as a crab's like an apple . . . She will taste as like this as a crab does to a crab.

   (*d*) *Of Edgar.*

   My tears begin to take his part so much,
   They'll mar my counterfeiting.

4. Explain and discuss Dr. Johnson's saying: "I was many years ago so shocked by Cordelia's death that I know not whether I ever endured to read again the last scenes of the play till I undertook to revise them as an editor."

(*b*) CHAUCER.

1. Explain fully—

   (*a*) Frenssh she spak ful faire and fetisly
   After the scole of Stratford-atte-Bowe,
   For Frenssh of Paris was to hire unknowe.

(*b*) Hise resons he spak ful solempnely
Sownynge alway thencrees of his wynnyng.

(*c*) His breed, his ale, was alweys after oon.

(*d*) In youthe he lerned hadde a good myster,
He was a wel good wrighte, a carpenter.

(*e*) What, carl with sorry grace,
Why artow al for-wrapped, save thy face?

(*f*) Here may ye se wel how that genterye
Is nat annexed to possessioun,
Sith folk ne doon hir operacioun
Alwey, as dooth the fyr, lo, in his kynde.

2. Explain the grammatical peculiarities in the following—

(*a*) Of smale houndes hadde she that she fedde
With rosted flessh.

(*b*) What sholde he studie and make hymselven wood
As Austin bit?

(*c*) Thou spak right now of thilke traytour, Deeth.

And the metrical peculiarities in the following—

(*a*) Gynglen in a whistlynge wynd als cleere.

(*b*) For to be wise in byynge of vitaille,
For whether that he payde or took by taille.

(*c*) Of his diete mesurable was he.

3. Give a description of the Yeoman and the Parson.

4. "Chaucer notes the oddities, the rogueries, even the vices of his pilgrims without disapproval, but only with tolerant amusement."

Illustrate this.

(*c*) LANGUAGE.

1. "Language is continually changing."

In what departments does the change chiefly take place? Give illustrations from the history of English.

2. Is there anything objectionable in the grammar or style of the following quotations? If so, point out precisely in what the fault consists.

(*a*) The work of national ruin was pretty effectually carried on by the ministers, but more effectually by the paper-money makers than they.

(*b*) I hope none of my correspondents will measure my regard for them by the frequency, or rather, the seldomcy of my epistles.

(*c*) From the habit of saving paper, which they have acquired at the University, some students use so many abbreviations that their writing is barely legible.

(*d*) Here we find the battered copper vessels, old brooms, cobwebs, apple-parings, and the like, which Flemish painters scatter so freely about their interiors.

(*e*) I must now embark upon the feature on which this issue chiefly hinges.

(*f*) This reminds me of what I was told at Calais from a very good hand.

3. Distinguish between Parable, Allegory, and Fable.

4. What Figures of Speech are illustrated in the following passages?

(*a*) O gentle sleep,
Nature's soft nurse!

(*b*) Canst thou not minister to a mind diseased—
Pluck from the memory a rooted sorrow?

(*c*) True ease in writing comes from art, not chance,
As those move easiest who have learned to dance.

(*d*) This nobleman kept a good table, and was noted for his cellar.

(*e*) Charity creates much of the misery it relieves; it relieves little of the misery it creates.

(*f*) During the Nelson celebrations the German newspapers showed great moderation; not one of them suggested that the Battle of Trafalgar had been won by Marshal Blücher.

LATIN PROSE COMPOSITION AND UNSEEN TRANSLATION.

PASS.

1. Translate into Latin—

(*a*) Though Cicero professed to be a man of courage, he is said to have shown much timidity when pleading on behalf of Milo.

(*b*) If Pompey had followed Cicero's advice, he would not have joined Cæsar, whom he seems to have for a long time trusted entirely.

(*c*) Few believe that Clodius was as great a villain as he is represented by his enemy's advocate to have been.

(*d*) Nero's determination was soon taken. He picked out six thousand foot and one thousand horse, the flower of his army, and gave out that he would march at nightfall on a secret expedition into Lucania. As soon as it was dark, he set out; but the soldiers soon discovered that Lucania was not their destination. They were marching northwards towards Picenum, and they found that provisions and beasts of burden were ready for them all along the road, by the Consul's orders. As soon as he was well advanced upon his march, he addressed his men, and told them that "in a few days they would join their countrymen under Livius in his camp at Sena Gallica; that combined they would intercept Hasdrubal and his invading army; that victory was certain; that the chief share of the glory would be theirs." The men answered this address as soldiers should; and everywhere, as they passed, the inhabitants came out to meet them. In a week's time they found themselves within a short distance of Sena.

2. Translate into English—

Quibus legionibus expositis, memor in Italia pristinae licentiae militaris ac rapinarum certorum hominum, parvulam modo causulam nactus, Cæsar, quod C. Avienus, tribunus militum decimae legionis, navem commeatu, familia sua, atque jumentis occupavisset, neque militem unum ab Sicilia sustulisset, postero die de suggestu, convocatis omnium legionum tribunis centurionibusque, "Maxime vellem," inquit, "homines suae petulantiae nimiaeque libertatis aliquando finem fecissent, meaeque lenitatis, modestiae, patientiaeque rationem habuissent. Sed quoniam ipsi neque modum neque terminum constituunt, quo ceteri dissimiliter se gerant, egomet ipse documentum more militari constituam. C. Aviene, quod in Italia milites populi Romani contra rem publicam instigasti, rapinasque per municipia fecisti, quodque mihi reique publicae inutilis fuisti, et pro militibus tuam

familiam jumentaque in naves inposuisti, tuaque opera militibus tempore necessario res publica caret, ob eas res, ignominiae causa, ab exercitu meo te removeo, hodieque ex Africa abesse, et, quantum potest, proficisci jubeo.

LATIN AUTHORS.

PASS.

1. Translate into English, extracts from Virgil, Æneid I. and II.

2. Translate, *with brief comments on the words underlined*—

   (*a*) Vos et Scyllaeam rabiem penitusque sonantes accestis scopulos, vos et Cyclopea saxa experti: revocate animos, maestumque timorem mittite; forsan et haec olim meminisse iuvabit.

   (*b*) Sanguine placastis ventos et virgine caesa cum primum Iliacas Danai venistis ad oras: sanguine quaerendi reditus, animaque litandum Argolica.

3. Translate into English, extracts from Cicero, Pro Milone and Pro Archia.

4. Translate, *with brief comments*—

   (*a*) Nam et Cimbricas res adulescens attigit (Archias), et ipsi illi C. Mario, qui durior ad haec studia videbatur, iucundus fuit.

   (*b*) (Milo) vitam suam, quam maximis praemiis propositam et paene addictam sciebat, numquam in periculum sine praesidio et sine custodia proiciebat.

   (*c*) (Pompeius), cum decretum de me Capuae fecit, ipse cunctae Italiae cupienti et eius fidem imploranti signum dedit, ut ad me restituendum Romam concurrerent.

GREEK—(FIRST YEAR PASS.)

PROSE COMPOSITION AND UNSEEN TRANSLATION.

1. Translate into Greek—

   Meanwhile the king, having taken up his position in the centre, and seeing no one coming against him, advanced as if to attack the Greeks on their flank. Cyrus, seeing this,

charged at full speed with his six hundred, and broke the line in front of the king. The troopers pursuing with great eagerness were scattered, and Cyrus was left alone with a handful of men. Even so, all would have been well, if he had not suddenly caught sight of his brother. But, on perceiving him in the throng, he cried out, "There is the man!" and advanced furiously against him. But Cyrus and his followers were too few to be victorious, and Cyrus himself, with eight others, was slain.

2. Translate into English—

οἱ δὲ Θηβαῖοι ἐπεὶ ἥσθοντο τὰ πεπραγμένα ὑπὸ τῶν Ἀρκάδων, πολὺ δὴ θρασύτερον κατέβαινον. καὶ τὴν μὲν Σελλασίαν εὐθὺς ἔκαον καὶ ἐπόρθουν. ἐπεὶ δὲ ἐν τῷ πεδίῳ ἐγένοντο ἐν τῷ τεμένει τοῦ Ἀπόλλωνος, ἐνταῦθα ἐστρατοπεδεύσαντο· τῇ δ' ὑστεραίᾳ ἐπορεύοντο. καὶ διὰ μὲν τῆς γεφύρας οὐδ' ἐπεχείρουν διαβαίνειν ἐπὶ τὴν πόλιν· καὶ γὰρ ἐν τῷ τῆς Ἀλέας ἱερῷ ἐφαίνοντο ἐναντίοι οἱ ὁπλῖται. ἐν δεξιᾷ δ' ἔχοντες τὸν Εὐρώταν πορῆσαν κάοντες καὶ πορθοῦντες πολλῶν κἀγαθῶν μεστὰς οἰκίας. τῶν δ' ἐκ τῆς πόλεως αἱ μὲν γυναῖκες οὐδὲ τὸν καπνὸν ὁρῶσαι ἠνείχοντο, ἅτε οὐδέποτε ἰδοῦσαι πολεμίους· οἱ δὲ Σπαρτιᾶται ἀτείχιστον ἔχοντες τὴν πόλιν, ἄλλος ἄλλῃ διαταχθείς, μάλα ὀλίγοι καὶ ὄντες καὶ φαινόμενοι ἐφύλαττον.

GREEK—(FIRST YEAR PASS.)

AUTHORS.

1. Translate into English, an extract from Euripides, Iphigenia in Tauris.

2. Translate, with notes—

(*a*) ΟΡ. *καὶ λούτρ' ἐς Αὖλιν μητρὸς ἀδέξω πάρα;*
ΙΦ. *οἶδ'· οὐ γὰρ ὁ γάμος ἐσθλὸς ὧν μ' ἀφείλετο.*
ΟΡ. *τί γάρ; κόμας σὰς μητρὶ δοῦσα σῇ φέρειν;*
ΙΦ. *μνημεῖά γ' ἀντὶ σώματος τοὐμοῦ τάφῳ.*

(*b*) *χοροῖς δὲ σταίην, ὅθι καὶ*
παρθένος εὐδοκίμων γάμων
παρὰ πόδ' εἰλίσσουσα φιλας
ματρὸς ἡλίκων θιάσους,
ἐς ἁμιλλας χαρίτων,

χλιδᾶς ἁβροπλούτοιο
εἰς ἔριν ὀρνυμένα, πολυποίκιλα φάρεα
καὶ πλοκάμους περιβαλλομένα γένυσιν
ἐσκίαζον.

3. Translate into English, with short notes, extracts from Lysias, Orations—

GREEK HISTORY.

ONE HOUR AND A HALF.

Not more than FOUR *questions to be answered.*

1. What was the origin of the Confederacy of Delos? Illustrate the way in which it gradually became an Athenian empire.
2. Briefly describe the reforms of Solon.
3. Describe the battle of Marathon, with a sketch map to illustrate the dispositions of the contending forces.
4. Discuss the wisdom of the Athenian interference in the affairs of Sicily.
5. Give a short life of Cimon, explaining carefully his policy.
6. Explain the following terms:—Perioeci, Cleruchy, Pentacosiomedimni, Oekist, Apella.

GEOMETRY AND MENSURATION.

PASS.

TWO HOURS.

1. Prove that there is one circle, and only one, which passes through three given points not in a straight line.
   If the three given points are the angular points of an equilateral triangle of side 3 feet, find the radius of the circle to the nearest inch. Find also the area of the triangle.
2. If two circles touch, the point of contact lies in the straight line joining their centres.
   Draw a circle of given radius to touch a given circle, and a given straight line. When is the problem insoluble?
3. Draw a straight line to touch two given circles. How many common tangents can be drawn to two circles which touch each other externally? If the direct common tangents to two circles which touch one another externally are inclined to one another at 60°, prove that the radius of one circle is three times that of the other.

4. Inscribe a circle in a given triangle.

   Two sides of a triangle measure 60 cms. and 11 cms. respectively, and the included angle is a right angle; show that the in-radius is 5 cms. long.

5. If a straight line be drawn parallel to a side of a triangle it divides the other sides or the other sides produced proportionally.

   ABCD is a parallelogram, and EF is a straight line parallel to AB. If EA, FB meet in G, and ED, FC in H, prove that GH is parallel to AD.

6. The areas of similar triangles are to one another as the squares of their homologous sides.

7. The straight line drawn from the right angle of a right angled triangle perpendicular to the hypothenuse divides the triangle into two parts, which are similar to the whole triangle, and to one another.

   ACB is a triangle having the angle ACB, a right angle, and AC, CB are respectively 1ft. 8in. and 1ft. 9in. long. Circles described on AC, CB as diameters intersect in D. Find the lengths of AD, BD and CD.

8. A circular ground containing 6 acres is surrounded by a circular track 25 feet wide. Find the area of the track.

ALGEBRA.

PASS.

TWO HOURS.

Four Figure Tables to be provided.

1. If $x=\dfrac{1}{10-4\sqrt{6}}$, prove that $x+\dfrac{1}{4x}=5$.

2. Solve the equations

   (i.) $3x^2+7x-\sqrt{x^2+2x+12}=x+66$.

   (ii.) $\left.\begin{array}{l}+\sqrt{x+y}=+\sqrt{y}+1\\ x-y=2\end{array}\right\}$

3. Find two numbers such that their sum, their difference and their product are as 11:3:56.

4. Prove that when m and n are positive integers

$$(a^m)^n = a^{mn} = (a^n)^m.$$

Simplify

(i.) $16^{\frac{5}{4}} + 8^{\frac{2}{3}}$

(ii.) $\left(\dfrac{a^{-\frac{1}{3}} b^{\frac{3}{4}}}{a^{\frac{1}{2}} b^{-\frac{1}{2}}}\right)^{\frac{2}{5}}$

5. Show that the expression $\dfrac{x^2 - 8x + 15}{x - 2}$ is positive for all values of x between 2 and 3, and for all values of x greater than 5, and that it is negative for all values of x between 3 and 5, and all values of x less than 2.

6. Explain in what way logarithm tables may be used for the evaluation of arithmetical expressions. Find

(i.) the actual value of $\dfrac{42{\cdot}77 \times 319{\cdot}2}{245}$;

(ii.) its approximate value as given by the Four Figure Tables.

Can you give any reason for the error in the second case?

7. Find the sum of n terms of the Geometrical Series

$$a + ar + ar^2 + \ldots$$

Express as a vulgar fraction, without quoting any arithmetical rule,

(i.) $\cdot 234343434$,

(ii.) $\cdot 2\dot{3}\dot{4}$.

8. Form the equation whose roots are

$$1, \frac{-1 \pm \sqrt{-3}}{2}$$

and show that each of these imaginary roots is the square of the other.

TRIGONOMETRY.

PASS.

TWO HOURS.

Four Figure Tables to be provided.

1. What is meant by the circular measure of an angle? Find the size of a radian, and the number of degrees in the angle which an arc of 4 feet subtends at the centre of a circle of radius 5 feet.

$$[\pi = \tfrac{22}{7}].$$

2. Prove that every angle has a definite set of trigonometrical ratios, and show how to construct the acute angle whose secant is a given positive number greater than unity.

3. Prove the following identities

(i.) $\dfrac{\cos A+\sin A}{\cos A-\sin A}+\dfrac{\cos^2 A+\sin^2 A}{\cos^2 A-\sin^2 A}=\dfrac{2+\sin 2A}{\cos 2A}$

(ii.) $(\cot^2 A-\cos^2 A)+(\tan^2 A-\sin^2 A)=\dfrac{1-3\sin^2 A\cos^2 A}{\sin^2 A\cos^2 A}$

4. A man walking towards a tower observes that the elevation of the top is A, and on going d yards nearer the tower in the line directly towards the foot he finds its elevation to be B. Find an expression, suitable for logarithmic calculation, for the height of the tower. Apply to the case

$$A=10^\circ\ 15',\quad B=30^\circ\ 45',\quad d=150.$$

5. Prove that

$$\cos(A+B)=\cos A\cos B-\sin A\sin B,$$

taking $0<A<90^\circ$

$0<B<90^\circ$

$90^\circ<A+B<180^\circ.$

If A and B are acute angles such that $\cos A=\frac{3}{5}$ and $\cos B=\frac{4}{5}$, find the value of $\cos(A+B)$, and deduce the value of $A+B$.

6. Prove that

$$1+\cos A=2\cos^2\frac{A}{2}$$

$$1-\cos A=2\sin^2\frac{A}{2}$$

and find expressions for $\cos\frac{A}{2}$ and $\sin\frac{A}{2}$ in terms of a, b, c, suitable for logarithmic calculation.

7. Solve the triangle in which

$a=51\cdot4$

$b=37\cdot9$

$c=25\cdot3.$

8. Prove that the area $\triangle$ of a triangle ABC is equal to

$$\sqrt{s(s-a)(s-b)(s-c)}.$$

Hence find the length of the perpendicular from the largest angle on the opposite side of the triangle of question (7).

JUNIOR FRENCH I.

AUTHORS.

PASS.

1, 2, 3 and 4. Translate into English, extracts from De Vogüé, Coeurs Russes; Scribe, Le Verre d'Eau; Molière, Le Misanthrope.

JUNIOR FRENCH II.

PROSE COMPOSITION AND UNSEEN TRANSLATION.

PASS.

1. Translate into French—

About two hours before midnight, Columbus, standing on the forecastle (*gaillard d'avant*), observed a light at a distance, and privately pointed it out to Pedro Guttierez, a page of the queen's wardrobe. Guttierez perceived it, and calling to Solcedo, comptroller of the fleet, all three saw it in motion, as if it were carried from place to place. A little after midnight the joyful sound of land! land! was heard from the Pinta, which kept always ahead of the other ships. But having been deceived so often by fallacious appearances, every man was now become slow of belief, and waited in all the anguish of uncertainty and impatience for the return of day. As soon as morning dawned, all doubts and fears were dispelled. From every ship an island was seen about two leagues to the north, whose flat and verdant fields, well stored with wood, and watered with many rivulets, presented the aspect of a delightful country. The crew of the Pinta instantly began the Te Deum, as a hymn of thanksgiving to God, and were joined by those of the other ships. This office of gratitude to heaven was followed by an act of justice to their commander. They threw themselves at the feet of Columbus. They implored him to pardon their ignorance, incredulity, and insolence, which had created him so much unnecessary disquiet, and had so often obstructed the prosecution of his well-concerted plan; and passing, in the warmth of their admiration, from one extreme to another, they now pronounced the man whom they had lately reviled and threatened to be a person inspired by heaven with sagacity and fortitude more than human, in order to accomplish a design so far beyond the ideas and conception of all former ages.

2. Translate into English—

(*a*) Le hasard voulut qu'un marchand entendît parler de ses tableaux. Il vint les voir. Le marchand avait la vogue parmi cette étrange clientèle pour laquelle les œuvres d'art ne sont ordinairement qu'un accessoire du mobilier, et qui abandonne à son tapissier le soin de lui choisir une galerie et une bibliothèque. Cet homme, qui faisait de bonnes affaires grâce à ses nombreuses relations, avait une boutique placée bien en vue dans un riche quartier. L'exposition dans sa montre constituait une quasi-publicité. Il achetait volontiers à bas prix des peintures de rebut qui ne pouvaient avoir accès parmi les amateurs sérieux, mais dont il trouvait le placement (*a market*). Il aimait, disait-il, à lancer les jeunes gens auxquels il reconnaissait cette médiocrité souple et féconde qui produit vite et travaille sur commande. Ce mauvais lieu artistique avait des allures de mont-de-piété. Les jours où la nécessité marchait sur leurs talons, les artistes venaient y consigner des tableaux, contre lesquels ils recevaient une misérable avance. Si la somme n'était pas restituée au bout d'un certain temps, toujours très limité, la consignation demeurait la propriété du marchand, et c'était ce qui arrivait le plus souvent. Il ouvrait en outre des crédits pour des fournitures qui pouvaient être remboursées en œuvres d'art, et par ce moyen, chaque année, il devenait possesseur d'un grand nombre de tableaux destinés à l'exposition, avant même qu'ils eussent quitté le chevalet (*easel*). C'était de l'usure déguisée en protection. Néanmoins, bien que tous ces pièges fussent connus, il ne manquait pas de gens qui venaient s'y livrer volontiers et qui croyaient encore lui devoir de la reconnaissance.

(*b*) Là-bas, sous les arbres s'abrite
  Une chaumière au dos bossu ;
Le toit penche, le mur s'effrite,
  Le seuil de la porte est moussu.
La fenêtre, un volet la bouche ;
  Mais du taudis, comme au temps froid
La tiède haleine d'une bouche,
  La respiration se voit.
Un tire-bouchon de fumée
  Tournant son mince filet bleu,
De l'âme en ce bouge enfermée
  Porte des nouvelles à Dieu.

JUNIOR GERMAN I.

PROSE COMPOSITION AND UNSEEN TRANSLATION.

PASS.

1. Translate into German—

In this manner I proceeded to Paris, with no design but just to look about me, and then to go forward. The people of Paris are much fonder of strangers that have money than of those that have wit. As I could not boast much of either, I was no great favourite. After walking about the town four or five days, and seeing the outsides of the best houses, I was preparing to leave this retreat of venal hospitality, when, passing through one of the principal streets, whom should I meet but our cousin, to whom you first recommended me. This meeting was very agreeable to me, and I believe not displeasing to him. He inquired into the nature of my journey to Paris, and informed me of his own business there, which was to collect pictures, medals, intaglios and antiques of all kinds, for a gentleman in London, who had just stepped into taste and a large fortune. I was the more surprised at seeing our cousin pitched upon for this office, as he himself had often assured me he knew nothing of the matter. Upon asking how he had been taught the art of a cognoscento so very suddenly, he assured me that nothing was more easy. The whole secret consisted in a strict adherence to two rules; the one, always to observe the picture might have been better if the painter had taken more pains; and the other, to praise the works of Pietro Perugino.

2. Translate (at sight)—

(*a*) In der Tat, wir sind geneigt, die Lawinen für vorwiegend nutzbringende Alpenphänomene zu halten. So groß auch in einzelnen Fällen ihre Verheerungen sein mögen, so hängt doch von ihnen die Möglichkeit einer Vegetation in großen Gebietsteilen ganz ab. Die kleinen Lawinen, also die zahlreichsten, sind in der Regel unschädlich, und von den größern wirkt nur ein geringer Teil, besonders die, welche neue Bahnen einschlagen, nachhaltig verheerend. Freilich sind die Schutzmittel der Alpenbewohner auch gar unzulänglich, namentlich die altbestandenen, morschen Bannwälder, die oft ganz neben einem neueingeschlagenen Lawinenzuge außen

stehen und allgemein im Abgange sind, da man sie nicht forstwirtschaftlich verjüngt und ergänzt. In Wallis herrscht in einigen höhern Tälern die ingenieuse Sitte, die Lawinen fest zu nageln, indem die Leute im Vorfrühling zu den bekannten Lawinenbruchstellen, an die Quellen der Schneeströme, hinaufsteigen und dort auf der ganzen geneigten Fläche eine Anzahl Pflöcke in den Boden treiben, damit bei der Schneeschmelze nicht das ganze Lager in Gang gerate. So furchtbar und unaufhaltsam der entwickelte Sturz ist, mit so kleinen Gegenmitteln kann doch sein Beginnen verhindert werden. Man hat ja schon bemerkt, daß periodische Lawinen ausgeblieben sind, wenn die Wildheuer im vorangehenden Sommer verhindert waren, gewisse Grasgesünse abzuscheren, worauf die langen, dürren Grashalme in den Schnee festfroren und diesen zurückhielten, daß er nicht in die Tiefe stürzte und dort den Gang einer Lawine anregte!

(*b*) Die feinen Ohren.

(Meiner Mutter)

Du warst allein,
ich sah durchs Schlüsselloch
den matten Schein
der späten Lampe noch.
Was stand ich nur und trat nicht ein?
Und brannte doch,
und war mir doch, es müsste sein,
daß ich noch einmal deine Stirne strich
und zärtlich flüsterte: Wie lieb' ich dich.

Die alte böse Scheu,
dir ganz mein Herz zu zeigen,
sie quält mich immer neu.
Nun lieg' ich durch die lange Nacht
und horche in das Schweigen—
ob wohl ein weißes Haupt noch wacht?

Und einmal hab' ich leis gelacht:
Was sorgst du noch,
sie weiß es doch,
sie hat gar feine Ohren,
ihr geht von deines Herzens Schlag,
obwohl die Lippe schweigen mag,
auch nicht ein leiser Ton verloren.

JUNIOR GERMAN II.

AUTHORS.

PASS.

1, 2 and 3. Translate into English, extracts from Schiller, Wallenstein, 1 and 2; Sudermann, Es Lebe das Leben.

CHEMISTRY—(Introductory.)

PASS.

1. Describe experiments (two at least) to show that when a combustible body burns with free access of air, the resulting product (or products) is heavier than the original body. Give sketches.

2. What are the essential differences between elements, chemical compounds, mechanical mixtures and solutions? Give examples of each class.

3. How would you prove the composition of water by volume, and the relation between the volumes of the constituents and the product formed? Give sketches.

4. Give a brief account of the facts upon which Dalton based his Atomic Theory. Explain the necessity of the modification introduced by Avogadro.

5. Explain fully the information conveyed by the equation

$$2CO + O_2 = 2CO_2.$$

How many kilogrammes of CO_2 would be produced by the combustion of 5000 c.c. of CO at 0°C and 760 m.m. pressure?

Atomic weights, C=12. O=16. 1 litre of H at 0°C and 760 m.m. weighs ·09 grams.

6. Describe experiments to illustrate the diffusion of gases. Give an outline of the theory of the constitution of gases, and point out how it explains the diffusion.

7. How would you prove the composition of the gas produced when strong sulphuric acid acts upon common salt, (*a*) qualitatively and (*b*) quantitatively

---

PHYSICS.

PASS.

1. Give a brief account of any of Galileo's researches in mechanics, with a statement of the result at which he arrived.

2. Give an account of the method by which Archimedes detected the fraud in connection with the manufacture of Heiro's crown.

3. How would you experimentally illustrate the statement that the surfaces of liquids behave as if they were elastic?

4. Describe any experiment showing that a succession of noises if repeated regularly, and with sufficient rapidity, blend into a musical sound.

   What is meant by the "pitch number" or "vibration frequency" of a musical note?

5. How do you account for the colours of bodies seen by reflected light?

6. Give an explanation of the brilliant colours of soap bubbles.

7. Explain how it is that a vessel containing iced water becomes covered with moisture when brought into a warm room.

PHYSIOGRAPHY.

The same paper as that set in the First Year of Science.

SECOND YEAR EXAMINATION.

ENGLISH I.

PASS.

Not more than EIGHT *questions to be attempted. No. 11 is compulsory for all students. No. 1 is compulsory for those who have not passed the class examination on Chaucer, and optional for the rest.*

1. Paraphrase, with explanatory notes, the following passages—

(*a*) I not wel how that I began,
Ful evel rehersen hit I can,
And eek, as helpe me God, with-al
I trowe hit was in the dismal
That was the ten woundes of Egipte,
For many a word I over-skipte
In my tale, for purè fere
Lest my wordès mys-set were.

(*b*) "The folk of Troye, as who seith, alle and some
In prison ben, as ye yourselven see;
Nor thennès shal not oon on-live come
For al the gold atwixen sonne and sea:
Trusteth right wel and understondeth me,
Ther shal not oon to mercy gon on-live,
Al were he lord of worldès twyès five!"

(*c*) "Hostè," quod he, "*depardieux* ich assente;
To brekè forward is nat myn entente.
Biheste is dette, and I wole holdè fayn
Al my biheste, I kan no bettrè sayn."

(*d*) "Nay," quod the Somonour, "lat hym seye to me
What so hym list,—whan it comth to my lot,
By God! I shal hym quiten every grot!
I shal hym tellen which a greet honóur
It is to be a flatterynge lymytour;
And his office I shal hym telle y-wis."

2. Describe the following poems by Surrey:—*Prisoned in Windsor, he recounteth his pleasure then passed;* the two complaints *Of the absence of her lover being upon the Sea; Satire against the citizens of London.*

3. Explain the significance of the following passages:—

(*a*) Cannot is false, and that I dare not falser:
I will not come to-day.

(*b*) *Brutus.* Look, Lucius, here's the book I sought for so;
I put it in the pocket of my gown.
Lucius. I was sure your lordship did not give it me.
Brutus. Bear with me, good boy, I am much forgetful.

(*c*) *Antony.* If we compose well here, to Parthia:
Hark, Ventidius.
Cæsar. I do not know,
Mecænas; ask Agrippa.

(*d*) *Brutus.* He's a lamb indeed that baes like a bear.
Menenius. He's a bear indeed that lives like a lamb.

4. "The conspirators cannot dispense with Brutus, but his help to them is fatal."

Explain and illustrate this.

5. "Enobarbus is the only personage in *Antony and Cleopatra* whose character is quite an original invention of Shakespeare's."

Discuss his place in the drama.

6. Is the story of Antony and Cleopatra merely one of moral and material shipwreck?

7. "To Volumnia are due not only the glories but the vices and mistakes of her son."

Examine this.

8. Compare *Julius Cæsar* and *Coriolanus* as historical pictures.

9. "With Shakespeare's tragic victims, however guilty they are, we can always sympathise."

Compare his method in this respect with that of Jonson in *Sejanus.*

10. Trace the growth of Milton's Puritanism in his early poems.

Or,

Contrast the characteristic landscapes and occupations of *L'Allegro* and *Il Penseroso.*

11. Explain fully—

(*a*) (The earth) sendeth forth
Her clergions, her own dear worth,
To mount and fly up to the air.

(*b*) In neither fortune loft nor yet represt,
To swell in wealth, or yield unto mischance.

(*c*) The complexion of the element
In favour's like the work we have in hand.

(*d*) The silken tackle
Swell with the touches of those flower-soft hands
That yarely frame the office.

(*e*) I mean to stride your steed, and at all times
To undercrest your good addition
To the fairness of my power.

(*f*) Fury ever boils more high and strong,
Heat with ambition, than revenge of wrong.

(*g*) Come, pensive nun, devout and pure,
Sober, steadfast, and demure,
All in a robe of darkest grain
Flowing with majestic train,
And sable stole of cypress lawn
Over thy decent shoulders drawn.

(*h*) When they list, their lean and flashy songs
Grate on their scranned pipes of wretched straw.

ENGLISH II.

PASS.

Not more than EIGHT *questions to be attempted, and not more than* FOUR *from each part.*

A.

1. (*a*) Discuss Chaucer's achievements as an artist in versification.

   Or,

   (*b*) "It is misleading to speak of Chaucer's three or four periods, for he is throughout essentially English."
   Is this criticism valid or final? What seem to you the "essentially English" characteristics of Chaucer?

2. "The figure of *Piers Ploughman* profoundly impressed the imagination of England, but the conception of the original author could not be fully grasped by his contemporaries and successors."

   Comment on this statement.

3. Estimate the services of Chaucer and of Wycliffe in establishing a tradition of literary English.

4. Describe the main characteristics of the *Paston Letters*.

5. Compare Douglas and Surrey as translators.

6. In what ways is More a typical representative of the Revival of Learning in England?

7. Describe and compare the literary innovations of Wyatt and Surrey.

B.

1. Trace the origin and evolution of the profession of actor in England.

2. From what causes do the apparent irreverences in the Miracle Plays arise?

3. In what respects did the Moral Plays contribute to the development of the Drama?

4. "The Elizabethan Tragedy owes much more to Rome than to Greece."

   Comment on this statement.

5. What circumstances give their importance to the following plays:—*Mother Bombie*, *Tancred and Gismunda*, *Promus and Cassandra*, *The Old Wives' Tale*, *James IV.*, *The Jew of Malta?*

6. "*The Tragical History of Doctor Faustus* is typical of its age and its author."

   Explain this statement.

7. Describe the salient features of Shakespeare's Middle Comedies with reference to the comedies of the French or Classic type.

LATIN PROSE COMPOSITION AND UNSEEN TRANSLATION.

PASS.

1. Translate into Latin—

   At the dawn of day the soldiers burst into the palace, seized Julian, the object of their choice, guarded him with drawn swords through the streets of Paris, placed him on

the tribunal, and with repeated shouts saluted him as their emperor. Julian, addressing himself by turns to the multitude and to individuals, sometimes implored their mercy and sometimes expressed his indignation; he conjured them not to sully the fame of their victories, and ventured to promise that, if they would immediately return to their allegiance, he would obtain from the emperor, not only a pardon, but even the revocation of the orders which had excited their resentment. But the soldiers, who were conscious of their guilt, chose rather to depend on the gratitude of Julian than on the clemency of the emperor. Their zeal was insensibly turned into impatience, and their impatience into rage. The inflexible Cæsar sustained, till the third hour of the day, their prayers, their reproaches, and their menaces; nor did he yield till he had been repeatedly assured that if he wished to live he must consent to reign.

2. Translate into English—

Tandem ad flumen Oxum ipse pervenit prima fere vespera. Sed exercitus magna pars non potuerat consequi: in edito monte ignes jubet fieri, ut ii, qui aegre sequebantur, haud procul castris ipsos abesse cognoscerent. Eos autem, qui primi agminis erant, mature cibo ac potione firmatos, implere alios utres, alios vasa, quibuscunque aqua portari posset, jussit, ac suis opem ferre. Sed qui intemperantius hauserunt, intercluso spiritu extincti sunt: multoque major horum numerus fuit, quam ullo amiserat proelio. At ille thoracem adhuc indutus, nec aut cibo refectus aut potu, qua veniebat exercitus, constitit: nec ante ad curandum corpus recessit, quam praeterierat agmen: totamque eam noctem cum magno animi motu perpetuis vigiliis egit. Nec postero die laetior erat, quia nec navigia habebat, nec pons erigi poterat, circum amnem nudo solo, et materia maxime sterili. Consilium igitur, quod unum necessitas subjecerat, init. Utres quam plurimos stramentis refertos dividit. His incubantes transnavere amnem: quique primi transierant in statione erant, dum trajicerent ceteri. Hoc modo sexto demum die in ulteriore ripa totum exercitum exposuit. Jamque ad persequendum Bessum statuerat progredi, cum ea, quae in Sogdianis erant, cognoscit.

LATIN AUTHORS.

PASS.

1. Translate *and comment on* extracts from Horace, Satires and Epistles.

2. Translate into English, extracts from Cicero, Second Philippic; and Sallust, Catiline.

3. Translate and comment on extracts from Sallust, Catiline.

ROMAN HISTORY.

PASS.

ONE HOUR AND A HALF.

Not more than FOUR *questions to be answered.*

1. What were the social and economic evils under which Rome and Italy suffered at the opening of the Gracchan period?

2. Distinguish between Tiberius and Gaius Gracchus as to the objects aimed at by each.

3. Briefly but clearly describe the political organisation of Italy at the outbreak of the Social War.

4. Compare Marius and Sulla in respect of their relative importance in Roman History.

5. What precisely was the question at issue between Cæsar and the Senate?

6. Estimate Cicero as a statesman.

7. What were the chief defects in the Republican provincial administration?

GREEK—JUNIOR CLASS.

(FIRST YEAR HONOURS AND SECOND YEAR PASS.)

UNSEEN TRANSLATION.

Translate into English—

1. *οὐκοῦν οὐδ' ἂν εἷς ἀντείποι, ὡς οὐ συμφέρει τῇ πόλει καὶ Λακεδαιμονίους ἀσθενεῖς εἶναι καὶ Θηβαίους τουτουσί. ἔστι τοίνυν ἔν τινι τοιούτῳ καιρῷ τὰ πράγματα νῦν, εἴ τι δεῖ τοῖς εἰρημένοις*

πολλάκις παρ' ὑμῖν λόγοις τεκμήρασθαι, ὥστε Θηβαίους μὲν Ὀρχομενοῦ καὶ Θεσπιῶν καὶ Πλαταιῶν οἰκισθεισῶν ἀσθενεῖς γενέσθαι, Λακεδαιμονίους δ', εἰ ποιήσονται τὴν Ἀρκαδίαν ὑφ' ἑαυτοῖς καὶ Μεγάλην πόλιν αἱρήσουσι, πάλιν ἰσχυροὺς γενήσεσθαι. σκεπτέον τοίνυν, μὴ πρότερον τούσδε γενέσθαι φοβεροὺς καὶ μεγάλους ἐάσωμεν ἢ 'κεῖνοι μικροὶ γεγενήσονται, καὶ λάθωσιν ἡμᾶς πλέονι μείζους οἱ Λακεδαιμόνιοι γενόμενοι ἢ ὅσῳ τοὺς Θηβαίους ἐλάττους συμφέρει γενέσθαι. οὐ γὰρ ἐκεῖνό γ' ἂν εἴποιμεν, ὡς ἀνταλλάξασθαι βουλοίμεθ' ἀντιπάλους Λακεδαιμονίους ἀντὶ Θηβαίων, οὐδὲ τοῦτ' ἔσθ' ὃ σπουδάζομεν, ἀλλ' ὅπως μηδέτεροι δυνήσονται μηδὲν ἡμᾶς ἀδικεῖν· οὕτω γὰρ ἂν ἡμεῖς μετὰ πλείστης ἀδείας εἶμεν.

2. ΑΓ. ὦ καλλίπυργον ἄστυ Θηβαίας χθονὸς
ναίοντες, ἔλθεθ', ὡς ἴδητε τήνδ' ἄγραν,
Κάδμου θυγατέρες θηρὸς ἣν ἠγρεύσαμεν.
πάτερ, μέγιστον κομπάσαι πάρεστί σοι,
πάντων ἀρίστας θυγατέρας σπεῖραι μακρῷ
θνητῶν· ἁπάσας εἶπον, ἐξόχως δ' ἐμέ,
ἣ τὰς παρ' ἑστοῖς ἐκλιποῦσα κερκίδας
ἐς μείζον' ἥκω, θῆρας ἀγρεύειν χεροῖν.
φέρω δ' ἐν ὠλέναισιν, ὡς ὁρᾷς, τάδε
λαβοῦσα τἀριστεῖα, σοῖσι πρὸς δόμοις
ὡς ἂν κρεμασθῇ· σὺ δέ, πάτερ, δέξαι χεροῖν.
γαυρούμενος δὲ τοῖς ἐμοῖς ἀγρεύμασι
κάλει φίλους ἐς δαῖτα· μακάριος γὰρ εἶ,
μακάριος, ἡμῶν τοιάδ' ἐξειργασμένων.

ΚΑ. ὦ πένθος οὐ μετρητόν, οὐδ' οἷόν τ' ἰδεῖν,
φόνον ταλαίναις χερσὶν ἐξειργασμένων.
καλὸν τὸ θῦμα καταβαλοῦσα δαίμοσιν,
ἐπὶ δαῖτα Θήβας τάσδε κἀμὲ παρακαλεῖς.
οἴμοι κακῶν μὲν πρῶτα σῶν, ἔπειτ' ἐμῶν·
τίνος πρόσωπον τοῦδ' ἐν ἀγκάλαις ἔχεις;

ΑΓ. λέοντος, ὥς γ' ἔφασκον αἱ θηρώμεναι.

ΚΑ. σκέψαι νυν ὀρθῶς· βραχὺς ὁ μόχθος εἰσιδεῖν.

ΑΓ. ἔα, τί λεύσσω; τί φέρομαι τόδ' ἐν χεροῖν;

ΚΑ. μῶν σοι λέοντι φαίνεται προσεικέναι;

ΑΓ. οὔκ. ἀλλὰ Πενθέως ἡ τάλαιν' ἔχω κάρα.

ΚΑ. ᾠμωγμένον γε πρόσθεν ἢ σὲ γνωρίσαι.

ΑΓ. τίς ἔκτανέν νιν; πῶς ἐμᾶς ἦλθεν χέρας;

ΚΑ. δύστην' ἀλήθει', ὡς ἐν οὐ καιρῷ πάρει.
ΑΓ. λέγ', ὡς τὸ μέλλον καρδία πήδημ' ἔχει.
ΚΑ. σύ νιν κατέκτας καὶ κασίγνηται σέθεν.
ΑΓ. Διόνυσος ἡμᾶς ὤλεσ'· ἄρτι μανθάνω.

GREEK—JUNIOR CLASS.
(SECOND YEAR PASS AND FIRST YEAR HONOURS.)
AUTHORS.

1. Translate an extract from Sophocles, Œdipus Rex.
2. Translate, with notes on underlined words—

   εἴπερ ἐγὼ μάντις εἰμὶ καὶ κατὰ γνώμαν ἴδρις,
   οὐ τὸν Ὄλυμπον ἀπείρων,
   ὦ Κιθαιρών, οὐκ ἔσει τὰν αὔριον
   πανσέληνον, μὴ οὐ σέ γε καὶ πατριώταν Οἰδίπουν
   καὶ τροφὸν καὶ ματέρ' αὔξειν,
   καὶ χορεύεσθαι πρὸς ἡμῶν, ὡς ἐπὶ ἦρα φέροντα τοῖς ἐμοῖς
   τυράννοις.

3. Translate an extract from Aristophanes, Peace.
4. Translate, with notes on the underlined words, extracts from Aristophanes, Peace.
5. Translate, with notes, extracts from Thucydides, Book VI.

GREEK HISTORY.
PASS.

The same paper as that set in the First Year Examination.

MATHEMATICS.

The same papers as those set in the Second Year of Science.

SENIOR FRENCH I.
PROSE COMPOSITION, TRANSLATION AT SIGHT, AND LITERATURE.
PASS.

1. Translate into French—

   Les Charmettes is haunted by ghosts unclean and forlorn. The place tells of poverty, trouble, impurity. A good

deal of clever modern talent in France has been employed in touching up the episode of which it was the scene, and tricking it out in idyllic festoons. But as I stood on the charming terrace—a little jewel of a terrace, with grey pillars and a mossy parapet, and an admirable view of great swelling violet hills—stood there reminded of how much sweeter Nature is than man, the story looked rather wan and unlovely beneath these literary decorations, and I could muster no keener relish for it than is implied in perfect pity. Hero and heroine were first-rate subjects for psychology, but hardly for poetry. But, not to moralise too sternly for a tourist between trains, I should add that, as an illustration, to be inserted mentally in the text of the *Confessions*, a glimpse of Les Charmettes is pleasant enough. It completes the rare charm of good autobiography to behold with one's eyes the faded and battered background of the story; and Rousseau's narrative is so incomparably vivid that the sordid little house at Chambéry seems of a hardly deeper shade of reality than the images you contemplate in his pages.

2. Translate into English—

DESCENTE DE LA MONTAGNE.

Je me souviens d'un orage terrible qui nous surprit à travers bois en descendant du Ballon d'Alsace. Quand nous quittâmes l'auberge d'en haut, les nuages étaient au-dessous de nous. Quelques sapins les dépassaient du faîte; mais à mesure que nous descendions, nous entrions positivement dans le vent, dans la pluie, dans la grêle. Bientôt nous fûmes pris, enlacés dans un réseau d'éclairs. Tout près de nous un sapin roula foudroyé, et tandis que nous dégringolions un petit sentier écarté, nous vîmes à travers un voile d'eau ruisselante un groupe de petites filles abritées dans un creux de roches. Epeurées, serrées les unes contre les autres, elles tenaient à pleines mains leurs tabliers d'indienne et de petits paniers d'osier remplis de myrtilles noires, fraîches cueillies. Les fruits luisaient avec des points de lumière, et les petits yeux noirs qui nous regardaient du fond du rocher ressemblaient aussi à des myrtilles mouillées. Ce grand sapin étendu sur la pente, ces coups de tonnerre, ces petits coureurs de forêts déguenillés et charmants, on aurait dit un conte du chanoine Schmidt . . .

3. FIVE *questions only to be attempted, of which* (*a*) *is compulsory, and must be answered in French*—

(*a*) Discuss the value of Malherbe's innovations.

(*b*) Explain the attitude of the xvii. century to lyric poetry and other measures popularised by the Pleiad.

(*c*) What literary ideas may Ronsard be said to have in common (i.) with Malherbe, (ii.) with Boileau?

(*d*) What elements in the Cid would you specify as contributing to its success? Account for the failure of later plays of Corneille's.

(*e*) Give a concise account of the leading figures among the Port Royalists.

(*f*) Criticise the justice of Boileau's description of himself—

Censeur un peu fâcheux, mais souvent nécessaire,
Plus enclin à blâmer que savant à bien faire.

(*g*) What are the peculiar merit and defects of Saint-Simon as a historian?

Additional question for Third Year Students only.

4. Translate passages from Boileau, Œuvres Poétiques.

SENIOR FRENCH II.

AUTHORS.

PASS.

Translate into English, extracts from Choix de Lettres du XVIIe Siècle; Corneille, Scènes Choisies; Pages Choisies de Saint-Simon; Molière, Les Femmes Savantes; La Bruyère, Caractères.

SENIOR GERMAN I.

PROSE COMPOSITION AND UNSEEN TRANSLATION.

PASS.

1. Translate into German—

Damaged and timeworn as it is, the Lay of Hildebrand and his son Hadubrand has still preserved the character of true heroic poetry. To call it epic is not to strain the

term too far, if "epic" be allowed to denote quality, even when the proper length of story is not attained. For the story is only a single scene, though it is a scene which in itself completes a tragedy. Shortly, it is the encounter between father and son, in which the son is slain—an old and favourite theme for tragic authors in different countries. It is here told with a variation from the common type; for while in other stories of the sort the father kills the son in ignorance, here he discovers who his son is, and is driven to fight with him because his son will not believe him. Hildebrand and Hadubrand met between the hosts in some great battle of the Huns, and the older warrior asked the name and lineage of his opponent. They were on opposite sides, and did not know one another, because Hildebrand had been long in exile with Theodoric, escaping from the wrath of Odoacer. When he fled, leaving "bride in bower," his son was an infant. Now Theodoric comes back with his Easterlings in the army of the Huns, and Hildebrand is in his company. Hadubrand will not listen to his father's story; he is sure that Hildebrand is dead. His father's offer of gifts is rejected: "with spears shall the gift be welcomed, point against point." The poem breaks off in the description of the combat. First go out the lances, the ashen spears that are caught in the shields: then they take to their swords:—and then the fragment ends, and nothing more is known of the old Lay of Hildebrand.

2. Translate (at sight)—

Den Gegenstand bildet für den dramatischen Dichter das, was man die Fabel nennt. Sie kann von der Geschichte überliefert sein oder ein Tagesereigniß bilden, sie kann dem Mythus oder der Sage angehören, sie kann auf freier Erfindung beruhen. Im letzteren Falle kann der Dichter sie selber erfunden haben, doch wird dies nur selten eintreffen; in der Regel wird dem Dichter seine Fabel überliefert, und gerade die größten Dichter pflegen sich am wenigsten mit der Erfindung einer neuen Fabel zu quälen. Der Grund läßt sich unschwer einsehen. Die Fabel ist ja der Gegenstand, den der Dramatiker seiner Idee gemäß gestaltet. Soll er nun diesen Gegenstand zuerst erfinden, um ihn dann seinem höheren Zwecke gemäß zu bearbeiten? Da wäre es doch viel einfacher, wenn er diese höheren Zwecke gleich bei der

Erfindung seiner Fabel maßgebend sein ließe, daß er also von einer bestimmten Idee, die er zur Darstellung bringen will, ausginge, für diese Idee ein Gewand suchte. Auf diese Weise kommen auch manche Dramen zu Stande; die moderne französische Bühne könnte uns eine Reihe von Beispielen liefern; und solche Dramen können auch recht wirkungsvoll sein. Allein in der Regel werden sie etwas Gekünsteltes an sich haben; sie werden leicht das Gefühl erregen, das dem Erfolg jeder Dichtung verhängnißvoll wird, das Gefühl des Gesuchten. Es wird sich zu deutlich zeigen, daß die ganze Erfindung nur um der Idee willen da ist; daß eben nur irgend ein abstrakter Satz mittelst der vorgeführten Handlung hat bewiesen werden sollen—und die Folge wird die sein, daß nur unser Verstand beschäftigt wird, unser Herz kalt bleibt, daß wir eine angenehme Anregung, vielleicht Erregung, jedoch keine Erschütterung verspüren.

3. (*a*) Give in German a short account of Wieland's *Oberon.*

(*b*) Discuss the significance of *Minna von Barnhelm* in the history of the German drama.

(*c*) What is Schiller's conception of Wallenstein's character and purpose?

(*d*) Sketch briefly the history of the Faust legend.

(*e*) Estimate the value of Herder's activity for German Literature.

(Additional for Third Year Students.)

4. Translate passages from Wallenstein I., II. and III.

SENIOR GERMAN II.

AUTHORS.

PASS.

1, 2, 3, 4 and 5. Translate extracts from Lessing, Litteraturbriefe; Iffland, die Hagestolzen; Klopstock, Oden; Gœthe, Faust, Part I.; Richter, Der Kleine Schulmeister Wuz.

6. Characterise the genius of Jean Paul.

LOGIC AND MENTAL PHILOSOPHY.

PASS.

Two *questions to be selected from each section. Short, clear answers are required.*

SECTION A.

1. What is the value of the logical test known as the "inconceivability of the contradictory"?
2. What is a fundamental science? What are the fundamental sciences? What are the defects of Comte's classification of the sciences?
3. What is meant by the opposition of Materialism and Idealism as "parallel and contradictory" explanations of experience?

SECTION B.

4. Give a psychological account of the process of attention, with special reference to James' analysis.
5. Describe psychologically what you understand by each of the following: Conflict of motives, the "pure ego," hallucination, apperception.
6. "So it would train my memory if I learned by heart the leading article in this morning's newspaper, or the names of all the Senior Wranglers from the beginning of the century." Show the ambiguity of the phrase "training the memory," and describe the general nature of the psychological process.

SECTION C.

7. Explain each of the following: *Fallacia a dicto secundum quid ad dictum simpliciter; fundamentum divisionis; dictum de omni et nullo.*
8. What is the difference (*a*) between a converse and an obverse inference; (*b*) between a contrary and a contradictory term; (*c*) between an analytic and a synthetic proposition?
9. Given a valid syllogism of the second figure, what do you know of the predicate of the conclusion, and the quantity of the major premiss?

SECTION D.

10. Explain each of the following: *Empirical Law; final cause; causa aequat effectum; inductio per enumerationem simplicem.*

11. Show how both deduction and induction have entered into some one of the great conclusions of modern science.
12. Show how the various "methods of induction" may be used to supplement each other in scientific practice.

LOGIC AND MENTAL PHILOSOPHY.

HONOURS I.

1. What do you understand by Empiricism and the Empirical Method in (*a*) Science, (*b*) Philosophy? Discuss the limitations or defects of Empiricism.
2. Discuss the definitions of Philosophy as "science of principles," "criticism of categories."
3. Give a psychological analysis of religious feeling. How does it differ from moral feeling?
4. State and discuss James' analysis of the sense of personal identity.
5. Show how psychological and metaphysical problems are involved in discussions on formal logic.
6. Write a note on each of the following quotations, showing how they illustrate points in the logical doctrine of definition:—
   (*a*) Chance is a name for our ignorance.
   (*b*) Macaulay was a book in breeches.
   (*c*) The X-rays are oscillations in the ether.
   (*d*) Faith is the substance of things hoped for, the evidence of things not seen.
   (*e*) Faith is belief in what we know not to be true.
   (*f*) La vérité est l'equation entre l'intelligence et son objet.
   (*g*) A socialist is—"one who hath yearnings
   For equal returns to unequal earnings."
   (*h*) A prospector is one who obtains the materials for a prospectus.

HISTORY I.

PASS.

You are recommended to answer SEVEN *questions, and no more.*

1. Describe the character of the Roman occupation of Britain. In what respects did traces of the occupation survive the English Conquest?

2. "The political institutions that we find established in the conquered land are the most purely Germanic institutions that any branch of the German race has preserved."

   What is the evidence that early English institutions are "Germanic"?

3. "It needed the inspiration of Roman Culture to make the monastic system itself an epitome of the varied life of the Church."

   Explain and illustrate the importance of the monastery in the early "Middle Ages."

4. Describe shortly the condition of England during the period from the death of Oswi to the death of Egbert.

5. Sketch the history of England from the death of Alfred to the death of Edgar.

6. What are the chief reasons which help to account for the success of the Normans in conquering England?

7. "Among other things the good order that William established is not to be forgotten." (*Chronicle.*)

   Explain the importance of this aspect of the reign of William I.

8. In what ways did the rule of Henry II. help towards the making of a united English nation?

9. Give some account of the work of the Franciscan Friars in England during the 13th century.

10 Dr aw a map of France, showing roughly the position of Normandy, Anjou, Aquitaine, and Gascony; and explain how the history of these provinces was connected with that of England during the period from 1066 to 1216.

HISTORY II.

PASS.

You are recommended to answer SEVEN *questions, and no more.*

1. Describe the constitution of (*a*) the Great Council in 1215, (*b*) of the Parliament in 1295.

2. What evidence is there of the growth of a new national life in England during the 14th century?

3. Write short notes about the following events:—The battle of Shrewsbury, the siege of Orleans, Cade's Revolt, the battle of Towton.
4. Describe a typical manor as it existed about 1300. What changes had taken place in it by 1450?
5. Trace the influence of the "New Learning" in England to the death of Henry VII.
6. What were Henry VIII's motives in undertaking the "Reformation" of the Church? Sum up the ecclesiastical changes which took place during his reign.
7. Describe the character and the policy of the Protector Somerset.
8. What were the great aims of Elizabeth's ecclesiastical policy? What were her views as to the toleration of differences in religion?
9. Explain and illustrate the growth of wealth in England in the reign of Elizabeth.
10. Show the importance of the English wool trade during the "Middle Ages."

HISTORY I.

HONOURS.

You are recommended to answer at least SEVEN *questions.*

1. What do we know as to the authorship of the Anglo-Saxon Chronicle?

   Discuss its value as historical material.
2. What materials did Bede use in writing his "History"? Discuss his qualifications as a historian.
3. Describe the character of the Roman occupation of Britain. In what respects did traces of this occupation survive the English conquest?
4. What evidence is to be gathered from the Chronicle as to (*a*) the nature of the war between English and Britons, and (*b*) the origin of the English kingship.
5. Describe the physical geography of Britain at the time of the English conquest, and show how it affected the progress of the conquest.

6. "The political institutions that we find established in the conquered land are the most purely Germanic institutions that any branch of the German race has possessed." What is the evidence that early English institutions are Germanic?

7. Describe the characteristics of Christianity in Ireland to the time of St. Columba.

8. "Justus, indeed, returned to the city of Rochester, where he had before presided; but the Londoners would not receive Bishop Mellitus, choosing rather to be under their idolatrous high priests; for King Eadbald had not so much authority in the kingdom as his father, nor was he able to restore the bishop to his church against the will and consent of the pagans."

   Explain and comment on this passage.

9. Write a short account of the life of St. Cuthbert.

10. "It needed the inspiration of Roman culture to make the monastic system itself an epitome of the varied life of the Church."

    Illustrate from Bede the characteristics of monastic life in his time.

HISTORY II.

HONOURS.

You are recommended to answer at least SEVEN *questions.*

1. Illustrate the survival of Old English "heathendom" in Christian England.

2. Discuss the origin of the English "shire," and trace its development to 1087.

3. What were the chief reasons that led to the growth of towns in England? Trace the history of London to 1087.

4. Explain the interest of the reign of Ine, Offa, and Egbert.

5. What does the Chronicle tell us about the reign of Edward the Elder?

6. Write a short account of the life and character of Dunstan.

7. Describe, with special reference to the Chronicle, the condition of England in the time of Ethelred.

8. "Guthrum was the head of a host which settled on the land which Guthrum won. Cnut was the general of an army, which sailed back again homewards when its war work was done."

   Explain the change in the character of the Danish invasions, and show how it affected the policy of Cnut.

9. "In fact William never claimed the crown by conquest. He always represented himself as the lawful heir, unhappily driven to use force to obtain his rights."

   Explain William's argument. Why did he put forward this view? Show its connection with his policy in respect to English institutions.

10. "In restoring the law of King Edward, he (William I) added 'with the additions which I have decreed for the advantage of the people of the English.'"

    What was the nature of these "additions"?

HISTORY III.

HONOURS.

You are recommended to answer SEVEN *questions, and no more.*

1. In what ways did the rule of Henry II help towards the making of a united English nation?

2. Describe the constitution of (*a*) the Great Council in 1215, (*b*) the Parliament in 1295.

3. What evidence is there of the growth of a new national life in England during the 14th century?

4. Describe a typical manor as it existed about 1300. What changes had taken place by 1450?

5. Write short notes on the following events:—The battle of Shrewsbury, the siege of Orleans, Cade's Revolt, the battle of Towton.

6. Trace the influence of the "New Learning" in England to the death of Henry VII.

7. What were Henry VIII's motives in undertaking the "Reformation" of the Church? Sum up the ecclesiastical changes which took place during his reign.

8. Describe the character and the policy of the Protector Somerset.

9. What were the great aims of Elizabeth's ecclesiastical policy? What were her views as to the toleration of differences in religion?

10. Explain and illustrate the growth of wealth in England in the reign of Elizabeth.

11. Show the importance of the English wool trade during the "Middle Ages."

THIRD YEAR EXAMINATION.

ENGLISH I.

PASS.

In this section not more than FIVE *questions to be attempted, of which 7, 8 or 9 must be one.*

A.

1. Note Shakespeare's chief variations from Brooke in the story of *Romeo and Juliet*, and discuss their significance.

2. "I do not know
Why yet I live to say 'This thing's to do';
Sith I have cause and strength and will and means
To do't."

Comment on this utterance of Hamlet's.

3. "Shakespeare gives only a caricature of Julius Cæsar in the play of which he is the titular hero."

Is this true?

4. "Shakespeare is as true to Roman life in all his Roman plays as he is blind to the characteristics of Greek life in those on Greek subjects."

Explain this. Is it quite accurate?

5. Discuss Othello's description of himself.

"One not easily jealous, but being wrought,
Perplex'd in the extreme."

6. "The history of Goneril and Regan shows that they are not monsters, but human beings driven on by the logic of circumstances."

Examine this statement.

7. "Timon is less truly a misanthrope than Iago."
Discuss this.

8. "The passion of Romeo is tragic because of its collision with facts, but that of Troilus because of its inherent nature."

Explain the point of this remark. Does it need qualification?

9. Examine Lamb's description of the witches in *Macbeth* that they "begin bad impulses to men."

B.

In this section not more than FOUR *questions to be attempted, of which 6 must be one.*

1. "In Scott's novels the chief interest lies neither in the characters nor in the adventures of the youthful hero and heroine, but in the pronounced and fully formed characters who have little connection with the nominal plot, and do not develop at all."

   Comment on this, and illustrate it from the *Antiquary*.

2. "(I have) thus explained a few of my reasons for writing in verse, and why I have chosen subjects from common life, and endeavoured to bring my language near to the real language of men."

   State and criticise the substance of Wordsworth's contention.

3. Compare and contrast the idea of *Alastor* and *Epipsychidion*.

4. Name and discuss the chief odes of Keats.

5. Describe Landor's Conversation between *Lady Lisle and Elizabeth Gaunt*, and point out in what ways it is characteristic.

6. (*a*) Comment on the significance of the following passages:—

   (i.) Every author, as far as he is great and at the same time *original*, has had the task of creating the taste by which he is enjoyed.

   (ii.) I love snow and all the forms
   Of the radiant frost;
   I love waves, and winds, and storms,
   Everything almost
   Which is Nature's, and may be
   Untainted by man's misery.

   (iii.) There was an awful rainbow once in heaven,
   We know her woof, her texture; she is given
   To the dull catalogue of common things.

   (iv.) *Plato.* Such are low thoughts.
   Diogenes. The bird of wisdom flies low, and seeks her food under the hedges. The sweetest fruit grows near the ground, and the plants that bear it need ventilation and lopping.

(*b*) Explain the following passages :—

(i.) Oh, thoughtless lassie, life's a faught ;
The canniest gate, the strife is sair ;
But ay fu'-han't is fechtin' best,
An' hungry care's an unco care :
But some will spend, and some will spare,
And wilfu' folk maun hae their will ;
Syne as ye brew, my maiden fair,
Keep mind that ye maun drink the yill.

(ii.) "Oh come ye here the fight to shun,
Or herd the sheep wi' me, man ?
Or were ye at the Sherra-muir
And did the battle see, man ?"
"I saw the battle sair and tough,
And reekin' red ran mony a sheugh ;
My heart, for fear, gaed sough for sough
To hear the thuds and see the cluds,
O' clans frae woods, in tartan duds,
Wha glaum'd at kingdoms three, man."

(iii.) Contented wi' little, and cantie wi' mair,
Whene'er I forgather wi' sorrow and care
I gie them a skelp as they're creepin' alang,
Wi' a cog of guid swats, and an auld Scottish sang.

ENGLISH II.

PASS.

Not more than EIGHT *questions to be attempted.*

1. What tendencies in the 18th Century Literature before the appearance of Blake were akin to those of the Romantic Revival?
2. Estimate Burns as a Song-writer.
3. Discuss the meaning of the term *Romanticism.*
4. "The *Ancient Mariner* is a delirious dream with a trite moral annexed."

   Discuss this criticism.
5. What are the distinctive notes in Wordsworth's interpretation of Nature ?
6. How did German Romanticism affect the prose fiction of the English Romantic Period ?

7. "Byron's rhymed tales are not better poetry than Scott's, but they were more congenial to the spirit of the time." Explain and comment.

8. Comment on Shelley's statement: "I am formed . . . . to appreciate minute and remote distinctions of feeling whether relative to external nature or the living beings that surround us, and to communicate conceptions which result from considering either the moral or material universe as a whole."

9. Discuss Keats as Hellenist.

10. How are the characteristics of Landor as a man reflected in his writings?

LATIN—CICERO AND UNSEEN TRANSLATION.

1. Translate and comment on extracts from Cicero, Tusculanae Disputationes.

2. Translate—

(*a*) Tam sollicitae ac suspensae civitati fama incerta primo accidit duos Narnienses equites in castra, quae in faucibus Umbriae opposita erant, venisse ex proelio, nuntiantes caesos hostes. Et primo magis auribus quam animis id acceptum erat, ut maius laetiusque, quam quod mente capere aut satis credere possent, et ipsa celeritas fidem impediebat, quod biduo ante pugnatum dicebatur. Litterae deinde ab L. Manlio Acidino missae ex castris adferuntur de Narniensium equitum adventu. Hae litterae per forum ad tribunal praetoris latae senatum curia exciverunt; tantoque certamine ac tumultu populi ad fores curiae concursum est, ut adire nuntius non posset, sed traheretur a percunctantibus vociferantibusque, ut in rostris prius quam in senatu litterae recitarentur. Tandem summoti et coerciti a magistratibus, dispensarique laetitia inter impotentes eius animos potuit. In senatu primum, deinde in contione litterae recitatae sunt; et pro cuiusque ingenio aliis iam certum gaudium, aliis nulla ante futura fides erat, quam legatos consulumve litteras audissent.

(*b*) Est honor et tumulis: animas placate paternas,
Parvaque in exstructas munera ferte pyras.
Parva petunt Manes: pietas pro divite grata est
Munere; non avidos Styx habet ima deos.

Tegula porrectis satis est velata coronis,
  Et sparsae fruges, parvaque mica salis,
Inque mero mollita Ceres, violaeque solutae.
  Haec habeat media testa relicta via.
Nec majora veto: sed et his placabilis umbra est.
  Adde preces positis et sua verba focis.
Hunc morem Aeneas, pietatis idoneus auctor,
  Attulit in terras, juste Latine, tuas.
Ille patris Genio sollemnia dona ferebat;
  Hinc populi ritus edidicere pios.
At quondam, dum longa gerunt pugnacibus armis
  Bella, Parentales deseruere dies.
Non impune fuit; nam dicitur omine ab isto
  Roma suburbanis incaluisse rogis.

LATIN AUTHORS—(JUVENAL AND TACITUS).

PASS.

1. Translate extracts from Juvenal.
2. Translate *and comment on* extracts from Juvenal.
3. Translate extracts from Tacitus, I. and II.
4. Translate *and comment on* extracts from Tacitus.

ROMAN HISTORY.

PASS.

Not more than FIVE *questions to be answered.*

1. "The key to the Empire, as Augustus constituted it, is that the Emperor was a magistrate, not a monarch" *(Bury)*. Explain the steps through which the Principate reached its final form in 19 B.C.
2. "Though the sovran people was now represented by the Princeps, it had still some political duties to perform" *(Bury)*. What was the position and competence of the Comitia under the Empire?
3. Explain carefully the meaning of the distinction between Senatorial and Imperial Provinces.
4. Briefly describe the system of taxation and sources of State revenue under the Empire.

5. Give a brief account of the Principate of Claudius.
6. Describe the relations between the Empire and Christianity to the time of Trajan.
7. Discuss the character and policy of Hadrian.
8. "It is in the field of law that the chief importance and credit of the Principate of Antoninus lie" *(Bury)*. Explain.

GREEK—SENIOR CLASS.
(SECOND YEAR HONOURS AND THIRD YEAR PASS.)
UNSEEN TRANSLATION.

Translate into English—

1. ἐπειδὴ τοίνυν εἰς Ἑλλήσποντον ἤλθομεν, καὶ ὅ τε χρόνος ἐξεληλύθει μοι τῆς τριηραρχίας καὶ μισθὸς οὐκ ἀπεδόθη τοῖς στρατιώταις ἀλλ' ἢ δυοῖν μηνοῖν, ἕτερός τε στρατηγὸς ἧκε Τιμόμαχος καὶ οὗτος διαδόχους οὐκ ἄγων ἐπὶ τὰς ναῦς, ἀθυμήσαντές μοι πολλοὶ τοῦ πληρώματος ᾤχοντο ἀπολείποντες τὴν ναῦν, οἱ μὲν εἰς τὴν ἤπειρον στρατευσόμενοι, οἱ δ' εἰς τὰς Θασίων καὶ Μαρωνειτῶν ναῦς, μισθῷ μεγάλῳ πεισθέντες καὶ ἀργύριον πολὺ προλαβόντες, καὶ τὰ μὲν παρ' ἐμοῦ ἐξανηλωμένα ἤδη ὁρῶντες, τὰ δὲ τῆς πόλεως ἀμελῆ, τὰ δὲ των συμμάχων ἄπορα, τὰ δὲ τῶν στρατηγῶν ἄπιστα, οὐδὲ διάδοχον ἥκοντα ἐπὶ τὴν ναῦν, παρ' οὗ ἄν τις ἠξίωσεν ὠφεληθῆναι. ὅσῳ γὰρ φιλοτιμούμενος ἄμεινον ἐπληρωσάμην τὴν ναῦν ἐρετῶν ἀγαθῶν, τοσούτῳ μοι πλείστη ἀπόλειψις ἐγένετο τῶν ἄλλων τριηράρχων. τοῖς μὲν γὰρ ἄλλοις, εἰ μή τι ἄλλο, οἵ γ' ἐκ καταλόγου ἐλθόντες ἐπὶ τὴν ναῦν παρέμενον τηροῦντες τὴν οἴκαδε σωτηρίαν, ὁπότε αὐτοὺς ἀφήσει ὁ στρατηγός· οἱ δ' ἐμοὶ ναῦται πιστεύοντες αὐτοῖς ἐπὶ τῷ δύνασθαι ἐλαύνειν, ὅπου ἔμελλον· ἀργύριον πάλιν πλεῖστον λήψεσθαι, ἐνταῦθ' ἀπῆσαν, ἡγούμενοι τὴν ἐν τῷ παρόντι εὐπορίαν κρείττω εἶναι αὐτοῖς τοῦ μέλλοντος φόβου, εἴ ποτε ληφθεῖεν ὑπ' ἐμοῦ.

2. ΣΤ. ἀλλ' εἴπερ ἐκ τῆς καρδίας μ' ὄντως φιλεῖς,
ὦ παῖ, πιθοῦ.
ΦΕ. τί οὖν πίθωμαι δῆτά σοι;
ΣΤ. ἔκστρεψον ὡς τάχιστα τοὺς σαυτοῦ τρόπους,
καὶ μάνθαν' ἐλθὼν' ἂν ἐγὼ παραινέσω.
ΦΕ. λέγε δή, τί κελεύεις;
ΣΤ. καί τι πείσῃ;
ΦΕ. πείσομαι,
νὴ τὸν Διόνυσον.

ΣΤ. δεῦρό νυν ἀπόβλεπε.
ὁρᾷς τὸ θύριον τοῦτο καὶ τηκίδιον;
ΦΕ. ὁρῶ. τί οὖν τοῦτ' ἐστὶν ἐτεόν, ὦ πάτερ;
ΣΤ. ψυχῶν σοφῶν τοῦτ' ἐστὶ φροντιστήριον.
ἐνταῦθ' ἐνοικοῦσ' ἄνδρες οἳ τὸν οὐρανὸν
λέγοντες ἀναπείθουσιν ὡς ἔστιν πνιγεύς,
κἄστιν περὶ ἡμᾶς οὗτος, ἡμεῖς δ' ἄνθρακες.
οὗτοι διδάσκουσ', ἀργύριον ἤν τις διδῷ,
λέγοντα νικᾶν καὶ δίκαια κἄδικα.
ΦΕ. εἰσὶν δὲ τίνες;
ΣΤ. οὐκ οἶδ' ἀκριβῶς τοὔνομα·
μεριμνοφροντισταὶ καλοί τε κἀγαθοί.
ΦΕ. αἰβοῖ, πονηροί γ', οἶδα. τοὺς ἀλαζόνας,
τοὺς ὠχριῶντας, τοὺς ἀνυποδήτους λέγεις·
ὧν ὁ κακοδαίμων Σωκράτης καὶ Χαιρεφῶν.
ΣΤ. ἢ ἤ, σιώπα· μηδὲν εἴπῃς νήπιον.
εἶναι παρ' αὐτοῖς φασιν ἄμφω τὼ λόγω,
τὸν κρείττον', ὅστις ἐστί, καὶ τὸν ἥττονα.
τούτοιν τὸν ἕτερον τοῖν λόγοιν, τὸν ἥττονα,
νικᾶν λέγοντά φασι τἀδικώτερα.
ἢν οὖν μάθῃς μοι τὸν ἄδικον τοῦτον λόγον,
ἃ νῦν ὀφείλω διὰ σέ, τούτων τῶν χρεῶν
οὐκ ἂν ἀποδοίην οὐδ' ἂν ὀβολὸν οὐδενί.

GREEK—SENIOR CLASS.

(SECOND YEAR HONOURS AND THIRD YEAR PASS.)

AUTHORS.

1. Translate, with notes, extracts from Homer, Iliad.
2. Translate an extract from Sophocles, Œdipus Rex.
3. Translate, with notes on the underlined words—

(*a*) εἴπερ ἐγὼ μάντις εἰμὶ καὶ κατὰ γνώμαν ἴδρις,
οὐ τὸν Ὄλυμπον ἀπείρων,
ὦ Κιθαιρών, οὐκ ἔσει τὰν αὔριον
πανσέληνον, μὴ οὐ σέ γε καὶ πατριώταν Οἰδίπουν
καὶ τροφὸν καὶ ματέρ' αὔξειν,
καὶ χορεύεσθαι πρὸς ἡμῶν, ὡς ἐπὶ ἦρα φέροντα τοῖς ἐμοῖς
τυράννοις.

(*b*) IO. *ἰοὺ ἰού, δύστηνε· τοῦτο γάρ σ' ἔχω*
μόνον προσειπεῖν, ἄλλο δ' οὔποθ' ὕστερον.
XO. *τί ποτε βέβηκεν, Οἰδίπους, ὑπ' ἀγρίας*
ἄξασα λύπης ἡ γυνή; δέδοιχ' ὅπως
μὴ 'κ τῆς σιωπῆς τῆσδ' ἀναρρήξει κακά.

GREEK—SENIOR CLASS.

(SECOND YEAR HONOURS AND THIRD YEAR PASS.)

HERODOTUS AND GREEK HISTORY.

1. (*a*) Translate and comment on extracts from Herodotus, Book VI.

(*b*) GREEK HISTORY, 404-323 B.C.

Not more than FOUR *questions to be answered.*

1. What do you know of—Cinadon, Phœbidas, Tegyra, Peace of Callias, Timoleon?
2. Sketch the history, and say what you know of the constitution, of the League of the Chalcidians.
3. What was the origin and what the object of the second Athenian Confederacy?
4. Describe the preliminary movements and the course of the battle of Mantineia.
5. What was the Theoric Fund?
6. Briefly describe the career of Alexander after the death of Darius.
7. Carefully distinguish the purpose of the various Theban expeditions into the Peloponnese.

SENIOR FRENCH I. AND II.

The same papers as those set in the Second Year, with additional passages for translation from Clèdat, Chanson de Roland.

SENIOR GERMAN I. AND II.

The same papers as those set in the Second Year, with additional passages for translation from Hoffmann, Kater Murr.

LOGIC AND MENTAL PHILOSOPHY.

PASS.

Not more than SEVEN *questions to be attempted.*

1. How would you explain the psychological genesis of the moral self? Give special attention to the sociological aspect.

2. Examine critically the assertion that pleasure constitutes the real object in desire.

3. What are the constitutive elements in religious feeling?

4. "The greatest happiness of the greatest number." Discuss with reference to patriotism and cosmopolitanism as ethical ideals.

5. Examine the definition of virtue as the habit of choosing the mean between two extremes.

6. Show how ethical doctrine generally implies, expressed or unexpressed, some psychological theory.

7. What is the bearing of the "organic" theory of man's relation to nature, on the problem of human freedom?

8. Is progress in philosophy compatible with the fact that ultimate solutions are unattainable, and actual solutions contradictory?

9. What are the main defects of Kant's theory of ethics?

LOGIC AND MENTAL PHILOSOPHY.

HONOURS I.

1. What is the psychological basis of the "feeling of freedom"? Distinguish the psychological from the metaphysical problem of free will.

2. "As long as the motive is right, the act is virtuous." What is the psychological justification for this statement? Discuss the ambiguity of the terms *end* and *motive* as used in psychological analysis.

3. Kant makes the feeling of obligation "a form of the mind like time, space, and causality." Discuss the problem from the psychological standpoint.

4. "The moral life does not embrace the whole of conduct. Life and its ideals are broader than morality." "Morality is coextensive with life." Discuss these remarks.

5. What are the scientific objections to intuitional theories of ethics?

HISTORY I.

PASS.

You are recommended to answer SEVEN *questions and no more.*

1. What were the ideas of George III. as to the powers which should be possessed and exercised by a British King?

   Describe shortly his relations with the various Ministries which held office during the first ten years of his reign.

2. "All political connections are in their nature factious." How does Burke criticise this view?

3. "Considering force not as an odious, but a feeble instrument, for preserving a people so numerous, so active, so growing, so spirited as this."

   What does Burke mean by describing "force" as "a feeble instrument"?

4. What are the chief reasons which help to explain (*a*) the final success of the American Colonies in the War of Independence, (*b*) the fact that this success was so long deferred, and so hardly won?

5. "Perhaps in his whole life he has never omitted a fair occasion to assert the same doctrines which appear in that book." ("Reflections on the French Revolution.")

   What instances could Burke quote of his conservatism before the French Revolution?

6. In what respects are Burke's "Reflections on the French Revolution" most open to criticism?

7. Explain the views of Fox as to (*a*) the French Revolution, (*b*) the policy of the British Government in respect to the Revolution, (*c*) the lesson which should be learnt by British statesmen from events in France.

8. Explain the importance of the following battles:—Cape St. Vincent, Camperdown, the Nile.

9. What were the chief conditions of the Treaty of Amiens? Sum up the chief results of the war between Great Britain and France which was there concluded.

HISTORY II.

PASS.

You are recommended to answer SEVEN *questions (which should include question 6), and no more.*

1. Describe the character of the constitution granted to Ireland in 1782. What were its chief defects?

2. What were the ideas and aims of the "United Irishmen"? What are the chief reasons which help to explain the failure of their plans?

3. What changes took place during the 18th century in the distribution of landed property? What were the chief causes of these changes?

4. What is meant by the "Domestic System" of Industry? What were the chief causes which led to its passing away? In what respect did the system which took its place stand in contrast with it?

5. In what respects did Carlyle think the "Past" to have been better than the "Present"? In what respects did he think that the ideas and customs of the "Middle Ages" ought to be adopted in the England of his day?

6. Describe the characteristics of the statesmanship of the Duke of Wellington.

7. Explain Bagehot's view as to the functions of the Cabinet in the British Constitution.

8. Sketch briefly the growth of the Constitution of Canada from 1836 to 1867.

9. "It is a condition of our Indian Empire that it should be held without any great effort."

   What are the chief facts which enable the British Government to hold India "without any great effort"? Illustrate by reference the Indian Mutiny.

HISTORY I.

HONOURS.

You are recommended to answer SEVEN *questions, and no more.*

1. "The virtue, spirit, and essence of a House of Commons consists in its being the express image of the feelings of the nation."

   By what arguments does Burke support this opinion?

2. "All political connections are in their nature factious."
   How does Burke criticise this view?

3. How, according to Burke, did the personal characters of Grenville and of Townshend determine the measures which they took in regard to the colonies?

4. "Considering force not as an odious, but a feeble instrument, for preserving a people so numerous, so active, so growing, so spirited as this."

   What does Burke mean by describing "force" as a "feeble instrument"?

5. "I am charged with being an American."
   What is Burke's answer?

6. "The American Revolution was the work of an energetic minority, who succeeded in converting an undecided and fluctuating majority to courses for which they had little love."

   What evidence may be adduced in support of this opinion?

7. "As it is the interest of Government that Reform should be early, it is the interest of the people that it should be temperate."

   Explain this doctrine with special reference to Burke's speech on Economic Reform.

8. "Let the Commons in Parliament assembled be one and the same thing with the Commons at large. Let us distinctly incorporate ourselves with the People."

   Why did Burke, holding these views, nevertheless oppose Parliamentary Reform?

9. Describe the essential features of Burke's opinions in respect to Irish politics.

HISTORY II.

HONOURS.

You are recommended to answer SEVEN *questions, and no more.*

1. "The Rights of men in Governments are their Advantages." What is Burke's meaning? What arguments does he deduce against the principles and methods of the French Revolution?

2. "Instead of casting away our old prejudices, we cherish them to a very considerable degree, and, to take more shame to ourselves, we cherish them because they are prejudices." What is Burke's meaning?

3. On what grounds did Burke base his prediction that the Revolution would end in the establishment of "the most completely arbitrary power that has ever appeared on earth"?

4. On what grounds did Burke claim that it was he, rather than Fox, who represented the ideas of "the Old Whigs"?

5. Sum up, as briefly as possible, Burke's argument against "a Regicide Peace."

6. Is there reason to think that there was any serious danger of the outbreak of "a French Revolution" in England?

7. Explain and discuss Lecky's view as to the causes of the outbreak of the war between France and Great Britain in 1793.

8. How are Burke's economic principles explained and illustrated in his "Thoughts and Details on Scarcity"?

9. "The most splendid repartee in our history." Explain this description of Burke's "Letter to a Noble Lord."

HISTORY III.

HONOURS.

You are recommended to answer SEVEN *questions (which should include question 7), and no more.*

1. Describe the character of the Constitution granted to Ireland in 1782. What were its chief defects?

2. What were the ideas and aims of the "United Irishmen"? What are the chief reasons which help to explain the failure of their plans?

3. "Liberty is order, Liberty is strength."
Explain Fox's argument.

4. What changes took place during the 18th century in the distribution of landed property? What were the chief causes of these changes?

5. What is meant by the "Domestic System" of Industry? What were the chief causes which led to its passing away? In what respects did the system which took its place stand in contrast with it?

6. In what respects did Carlyle think the "Past" to have been better than the "Present"? In what respects did he think that the ideas and customs of the "Middle Ages" ought to be adopted in the England of his day?

7. Describe the characteristics of the statesmanship of the Duke of Wellington.

8. "It is a condition of our Indian Empire that it should be held without any great effort."
What are the chief facts which enable the British Government to hold India "without any great effort"? Illustrate by reference to the Indian Mutiny.

9. Explain Bagehot's view as to the functions of the Cabinet in the British Constitution.

10. Sketch briefly the growth of the Constitution of Canada from 1836 to 1867.

FACULTY OF MEDICINE.

FIRST DEGREE EXAMINATION.

INORGANIC CHEMISTRY AND PRACTICAL CHEMISTRY: PHYSICS AND PRACTICAL PHYSICS, BIOLOGY AND PRACTICAL BIOLOGY, as in the First Year of Science.

ANATOMY.

1. Give an account of the process of Spermatogenesis.

2. Indicate briefly the fate of the visceral arches and clefts in the human embryo.

3. State very briefly what is meant by the following terms:—
(*a*) Inner cell mass; (*b*) amnion; (*c*) mesogastrium; (*d*) trophoblast; (*e*) decidua serotina; (*f*) cardinal vein; (*g*) basal lamina; (*h*) sclerotome; (*i*) area vasculosa; (*k*) zona radiata.

SECOND YEAR—TERM EXAMINATION.

CHEMISTRY—(Carbon Compounds).

1. How are the amounts of C, H, N and Cl determined in carbon compounds?

2. Briefly describe Victor Meyer's process for determining vapour densities.

   ·18 grams of a substance heated by steam gave 38 c.c. of air at 13°C and 731·2 m.m. pressure. Tension of aqueous vapour at 13°C=11·2 m.m.

   Calculate the vapour density of the substance.

3. What do you understand by the terms radicle, ether, ethereal salt or ester and mercaptan? Give examples.

4. Give a short account of benzoic, salicylic, gallic and tannic acids respectively. Show their relationship.

5. What are the principal properties of the compounds known as pinene, camphene, limonene, camphor and borneol. How are they related to one another?

6. What is a dye? How are the colours usually fixed? What are the differences between rosaniline and pararosaniline?

7. What is meant by the terms "geometrical isomerism" and "asymmetric carbon atoms"? Give examples.

8. Give a short account of the bases pyridine and quinine, and of the substance known as antifebrin (acetanilide). How can the properties of such compounds be modified?

SECOND DEGREE EXAMINATION.

PHYSIOLOGY.

PART I.

Only FIVE *questions to be attempted.*

1. Fatigue—Write a full account of the physiology of fatigue
   (*a*) in nerve fibres,
   (*b*) in nerve centres, and
   (*c*) in muscle.
2. The Heart—
   (*a*) What are the factors in the filling of the auricles?
   (*b*) What are the factors in the causation of the first and second sounds?
   (*c*) How is the normal rhythm of the heart's beat maintained?
3. Respiration—
   (*a*) Describe the successive stages of asphyxia, giving as far as is possible the physiological explanation of the different phenomena.
   (*b*) Describe the nerve-mechanism by which ordinary respiration is maintained.
4. Alimentation—Describe the functions of
   (*a*) the pancreatic juice,
   (*b*) the bile,
   (*c*) the intestinal juice.
5. The Kidney and the Urine—
   (*a*) Write an account of the relationship between renal blood-flow, renal volume, and renal secretion.
   (*b*) Describe the nerve-mechanism of micturition.
   (*c*) What is the relation of the kidney to internal secretion?
6. Vision—
   (*a*) State the two leading theories of colour vision.
   (*b*) In what part of the retina is the light-motion converted into nerve-motion? Prove it.
   (*c*) What is the precise effect of section of the trunk of the third cranial nerve on the right side, just as it enters the orbit?

PHYSIOLOGY.

PART II.

Two questions in each section to be attempted.

A.

1. (*a*) Describe the microscopical anatomy of a medium-sized artery and vein, *e.g.*, the femoral vessels. (*b*) What differences are observed in the carotid artery and aorta? (*c*) How would you stain a portion of omentum by means of silver nitrate?
2. (*a*) Describe the histological structure of the stomach as revealed in sections stained by hæmalum and eosin, and in specimens the blood vessels of which are injected with carmine jelly. (*b*) Write a note on the processes of maceration and teasing.
3. (*a*) Describe the structure of the retina. (*b*) How would you preserve and stain it to show as much of its structure as possible?

B.

1. Write short notes on the chemical properties, constitution and sources of (*a*) dextrose, (*b*) tri-palmatin, and (*c*) ammonium magnesium phosphate.
2. (*a*) How would you estimate the "total Nitrogen" in urine? (*b*) If you found the amount present in the 24 hours' urine, from a healthy man, weighing 80 kilos, to be 8 grammes, what conclusions would you draw?
3. (*a*) Describe the changes undergone by egg-white under the action of pepsin, trypsin, and erepsin. (*b*) What test would you use to show the differences between the final products formed and the egg-white?

C.

1. (*a*) What is a glucoside? (*b*) Name the principal glucosides occurring in plants used for medicinal purposes. (*c*) How are these bodies separated from mixtures containing them and other active plant derivatives? (*c*) What tests are characteristic of the whole group?
2. Write short notes on the action upon the heart, muscle and nerve of (*a*) curara, (*b*) chloroform, and (*c*) ether.
3. (*a*) How are drugs that act upon the circulation classified? (*b*) What are the principal members in each group? (*c*) How do they produce their action?

ANATOMY.

1. Describe fully—
   (*a*) The coraco-clavicular ligament.
   (*b*) The external lateral ligament of the ankle-joint.
   (*c*) The crucial ligaments of the knee-joint.
2. Give an account of the relations of the kidneys to the neighbouring structures.
3. Give an account of the dissection of the perinæum necessary to expose completely the superficial layer of the triangular ligament (urogenital diaphragm).

   Describe the structures met with, and indicate their mutual relations to one another.
4. Describe the origin, course, relations, and distribution (*a*) of the right phrenic nerve, (*b*) of the muscular spiral nerve.
5. Tell what you know of the naked-eye anatomy, and relations of the fornix (of the brain), and describe its connections.

THIRD YEAR—TERM EXAMINATION.

GENERAL PATHOLOGY.

1. Describe the phenomena of an Acute Inflammation terminating in Suppuration.

2. What are the main causes and principal forms of Necrosis? Illustrate your answer by reference to particular instances.

3. Describe the general structure and mode of spread of the Sarcomata.

4. What Pathogenic Bacteria may be encountered in the mouth? With what diseases may they be associated? What are the structural features, the cultural characters, and the conditions of growth and vitality of any *one* of them?

FOURTH YEAR EXAMINATION.

PATHOLOGY.

1. Discuss the pathology of Fatty Degeneration, and describe the changes in the tissues most commonly implicated.
2. Give an account of the Bacillus of Diphtheria under the following headings:—(*a*) Morphology, (*b*) biology, (*c*) mode of action, (*d*) diagnosis, (*e*) immunisation.
3. Name the causes and the sites of the various forms of Intestinal Ulceration, and describe the naked-eye characters of each form.
4. Give an account of Tuberculosis of the Central Nervous System.

OPERATIVE SURGERY AND SURGICAL ANATOMY.

1. Describe the outer wall of the nasal passages.
2. Name the nerve supply to the muscles of the larynx, and explain the peculiarity in the incidence of laryngeal paralysis known as "Semon's Law."
3. Describe the Sacral Plexus. What are its relations and branches?

   How would you expose the Internal Pudic nerve where it lies on the spine of the Ischium?
4. Describe the nerve supply to the Scalp; mention the anatomical points in its structure which may have a bearing on its surgery. Describe the operation for ligature of the Superficial Temporal Artery.
5. The Occipital Artery—
   (*a*) Describe its course.
   (*b*) Describe its relations.
   (*c*) Describe the operation for its ligature.

FIFTH YEAR EXAMINATION.

MEDICINE.

1. Discuss the diagnosis of Typhoid Fever and its complications.
2. Give an account of the symptoms and physical signs, and discuss the diagnosis, of Pericarditis.
3. Discuss the clinical forms of Uræmia and its diagnosis.
4. Discuss the nature, symptoms and diagnosis of Alcoholic Neuritis.

SURGERY.

1. Artificial respiration. Compare the methods of Silvester, Howard and Schäfer as applied to the resuscitation of persons (*a*) apparently drowned, and (*b*) suffering from chloroform asphyxia in the course of an abdominal section.
2. Describe the operative treatment of Goitre causing pressure symptoms.
3. What pathological conditions may cause intestinal obstruction? Describe the symptoms, diagnosis and treatment.
4. Write all you know about fracture of the Ulna.

MIDWIFERY.

TWO HOURS.

1. Describe the third stage of labour, and discuss its mechanism.
2. Describe the cases of difficult labour best suited for treatment by (*a*) Forceps, (*b*) Version, (*c*) Embryotomy, (*d*) Cæsarian section.
3. Describe the chief troubles incidental to Lactation, and their treatment.

GYNÆCOLOGY.

TWO HOURS.

THREE *questions only to be answered.*

1. Describe fully the vascular and lymphatic supply of the female genitals, and show the bearing their distribution has on pathological conditions.

2. Give an account of the anatomy and functions of the Fallopian tube. Enumerate the causes of tubal inflammation, and describe the various changes in the Pelvis that may result therefrom.
3. What are the various forms of Dysmenorrhœa, their causes, pathology and treatment?
4. What is the difference between Menorrhagia and Metrorrhagia? Give the causes of each, and describe how you would treat the various forms.

MEDICAL JURISPRUDENCE AND PUBLIC HEALTH.

TWO HOURS.

1. Describe, in respect of acute poisoning by Phosphorus—
   (*a*) The course of the illness, and its appropriate treatment.
   (*b*) The post-mortem appearances, external and internal, in a fatal case.
2. In an examination of a cadaver, removed from the water twelve hours after death, state what external and internal appearances would lead a medical jurist to ascribe the death to drowning.
3. Enumerate the several conditions in which Syncope occurs as the proximate (primary) cause of death, and describe the post-mortem appearances indicating that death has occurred from Syncope.
4. Give a sketch of a system of house drainage for a two-storied dwelling, showing the various necessary traps, and explain the following terms:—Water seal, boundary trap, anti-syphon vent.
5. Classify all foods. State the average quantity of each of the great food principles required daily by an adult engaged in moderate work, and briefly indicate the function of each class of food in the animal body.
6. What provisions are made in the Public Health Act for preventing the spread of infectious disease (*a*) in dwellings, (*b*) in schools?

OPHTHALMIC MEDICINE AND SURGERY.

TWO HOURS.

1. Enumerate the conditions calling for iridectomy—
   (*a*) For therapeutic purposes.
   (*b*) For optical purposes.
   Describe the operation for the latter, and the after treatment.

2. What are the chief varieties of Retinitis? Give the distinctive ophthalmoscopic appearances of each.
3. Give the signs, symptoms, pathology, prognosis and treatment of phlyctenular ophthalmia.
4. State the causes and describe the ophthalmoscopic appearances of optic atrophy.

PSYCHOLOGICAL MEDICINE.

TWO HOURS.

1. What is Epileptic Insanity? What are its varieties? What is its treatment—medicinal, moral, and general?
2. Describe a case of General Paralysis of the Insane from the earliest symptoms of the first stage to the termination of the disease.
3. Describe the points to be observed in examining a patient as to Testamentary Capacity. State what would lead you to affirm its presence in a patient obviously insane.

SECOND YEAR EXAMINATION.

ANATOMY.

ONE HOUR AND A HALF.

Only THREE *questions to be answered.*

1. Describe the bony wall of the orbital cavity.

2. Give a detailed account of the nerve supply of the teeth.

3. Tell what you know of the distribution of the external carotid artery and its branches.

4. What do you understand by the following terms:—(*a*) Arytenoid cartilage; (*b*) suboccipital triangle; (*c*) sphenomandibular ligament; (*d*) canal of Huguier; (*e*) ciliary ganglion; (*f*) tarsal plate; (*g*) recessus sphenoethmoidalis; (*h*) infundibulum; (*j*) Meckel's ganglion; (*k*) straight sinus.

DEPARTMENT OF DENTISTRY.

FIRST YEAR EXAMINATION.

INORGANIC CHEMISTRY AND PHYSICS.

As in the First Year of Science.

PRACTICAL CHEMISTRY AND METALLURGY.

A three hours' examination.

THIRD YEAR EXAMINATION.

PHYSIOLOGY.

1. The Tissues—
   (*a*) Enumerate the varieties of connective tissue.
   (*b*) Write an account of the physiology of each of these tissues other than the blood.
2. Respiration—
   (*a*) How is the air drawn into the thorax during inspiration?
   (*b*) What is meant precisely by the terms—
      (1) complemental air,
      (2) residual air,
      (3) permanent air,
      (4) collapse air,
      (5) tidal air?
3. Alimentation—
   (*a*) Write an account of the whole process of mastication.
   (*b*) Describe the hard palate and the soft palate, and show what part each takes in mastication and in deglutition.
4. The Skin—
   (*a*) Describe the relationship between the skin and the kidney.
   (*b*) What is the relation between the secretions of the skin and animal heat?
5. Special Muscular Mechanisms—
   (*a*) Describe the act of walking.
   (*b*) Suppose that a person is sounding a particular musical note, tell precisely what re-arrangements are made in the larynx when he takes a note of a higher pitch?
6. Sense Organs—
   (*a*) Describle the end-organ of taste in the tongue.
   (*b*) Describe the end-organ of touch in the finger.
   (*c*) What is meant by an "objective" sensation?

SURGERY.

1. What conditions give rise to closure of the jaw, and describe the treatment.

2. Necrosis of the jaw—
   (*a*) Causes.
   (*b*) Symptoms.
   (*c*) Prevention.
   (*d*) Treatment.

3. Describe the different degrees of cleft palate. Describe the different operations for remedying these defects.

MATERIA MEDICA.

1. Chloride of Ethyl: In what ways has this substance been employed in Dentistry? How does it act in each case, and explain carefully the drawbacks (if any) attending its use and how they may best be obviated.

2. Mention three examples of substances used for bleaching teeth, and how they may be employed and how they act in each case.

3. Prescribe a mouth-wash containing two active ingredients at least; the directions to the chemist to be given in Latin and those to the patient in English. Explain the reasons for using the ingredients and how they act.

4. Mustard: What do you know of the source, manner of action, active principles and uses for which this substance may be employed (in Dental practise)?

5. Oil of Cloves: What do you know of the composition and local action of this body? Compare it in this latter respect with Oil of Eucalyptus, Chloral and Menthol respectively.

PATHOLOGY.

The same paper as that set in the Term Examination of the Third Year of Medicine.

MECHANICAL DENTISTRY.

1. What is the cause of porosity during vulcanization, and how is it to be avoided?
2. Name the various metals and alloys used in making dies and counter-dies, and quote any advantage or disadvantage possessed by each.
3. Name the various materials used for investments, and give the essential features to be observed in the process of soldering.
4. Describe the construction of a seamless crown.
5. What are the essential points to be observed in preparing abutments for a bridge?
6. How would you proceed in constructing a dummy (porcelain faced)?
7. Describe the method of fitting a logan crown with a half band, and how would you proceed in setting such a crown?
8. How would you repair a broken porcelain facing in the mouth?

SURGICAL DENTISTRY I.

1. What are the causes of pain following extraction of a tooth? What treatment would you adopt in each case?
2. What are the causes, symptoms, treatment and possible sequelæ of acute septic periodontitis?
3. How would you treat a case of perforation of the hard palate with loss of substance due to syphilis?
4. What are the symptoms of Polypus of the Pulp? Describe your treatment of such a condition in a lower molar.
5. How would you diagnose a supernumerary tooth in the upper incisor region from a permanent lateral? Give your treatment of such a case.
6. What complications may be associated with an impacted lower wisdom tooth? How would you treat each condition?
7. What conditions in the mouth may cause persistent neuralgia?

SURGICAL DENTISTRY II.

Clinical.

1. What considerations render it important to secure free separation before filling cavities on approximal surfaces?
2. How may the pain of malleting be reduced in a tooth sore from separating?
3. What materials do you think most useful in bleaching discoloured teeth? Briefly describe the manner of using same.
4. How may you overcome or reduce the warping of matrix in porcelain inlay work?

Orthodontia.

1. At what time do you consider it advisable to undertake the correction of irregularities?
2. In what conditions of irregularities are you compelled to resort to anchorage outside the mouth?
3. What complication may be met with in attempting to gain lateral expansion of the superior arch?
4. Describe what you consider the *best* method of "jumping the bite."

FOURTH YEAR EXAMINATION.

(UNDER SPECIAL REGULATIONS.)

MECHANICAL AND SURGICAL DENTISTRY.

The candidate is required to fully discuss the following questions so as to disclose high proficiency.

1. Discuss fully the conditions under which you would employ bridgework in preference to a partial plate.
2. Compare porcelain with gold as a filling material.
3. Contrast high fusing with low fusing bodies for inlay work.
4. An aseptic mouth—is it a possibility?

DEPARTMENT OF PHARMACY.

PHARMACY STUDENTS TAKE THE FOLLOWING PAPERS :—

CHEMISTRY—INTRODUCTORY and METALS, as in the First Year of Science.
CHEMISTRY—CARBON COMPOUNDS, as in the Second Year of Science.
PRACTICAL CHEMISTRY—Four hours.
BOTANY—As in the First Year of Science.

MATERIA MEDICA.

1. What are the names of the crystalline substances visible when Rhubarb, Catechu, Balsam of Tolu, and some specimens of Aloes, respectively, are viewed under the microscope? What appearances do these crystals present in each case? What circumstances determine their presence or absence in Aloes? Whence is Rhubarb obtained, and what are the chief constituents in it?
2. By what various characters can you distinguish Anise from Conium fruits, and Bitter Almonds from Sweet Almonds?
3. What do you know of the nature and composition of Oil of Cloves, Oil of Cade, Oil of Theobroma, Castor Oil, and Liquid Paraffin respectively?
4. From what plants and how are Guaiac Resin, Eucalyptus Gum, Galbanum, and Resin respectively obtained? What countries yield them?
5. What are the leading adulterations which may be found in Copaiba, Creosote and Mustard respectively? Describe the official varieties of Cocà Leaves. What are the leading active principles in them? Explain the chief changes which are liable to result in Cocà leaves after being gathered?

FACULTY OF SCIENCE.

FIRST YEAR EXAMINATION.

INORGANIC CHEMISTRY—(NON-METALS).

1. What do you understand by the following terms:—Chemistry, non-metal, equivalent, atom, atomic weight and molecule?
2. Give an account of the properties of hydrogen. What is meant by the diffusion of gases?
3. How may sulphur dioxide, ammonia and air be liquefied? What are the principal properties and uses of liquid air?
4. Give an account of ammonia—(*a*) Its occurrence in nature, (*b*) preparation, (*c*) properties, and (*d*) uses.
   How would you prove its composition by volume?
5. Why are the elements fluorine, chlorine, bromine and iodine classed together?
6. Give a brief account of the element arsenic, and of its compounds with hydrogen and oxygen. Why is arsenic classed with N, P and Sb?
7. What chemical changes take place in the preparation of sulphuric acid? Give a brief account of the other oxygen acids of sulphur?
8. How many litres of oxygen are required for the complete combustion of 500 litres of each of the following gases, and what is the volume of the products in each case at 0°C and 760 m.m.:—
   (*a*) Hydrogen. (*b*) Marsh gas. (*c*) Acetylene. (*d*) Carbon monoxide.

CHEMISTRY—(METALS).

1. Describe the rhombic system of crystals.
2. How does aluminium occur in nature? How is it extracted? Describe its properties and uses.

3. What changes take place when a metallic salt is dissolved in water? What are the principal phenomena of supersaturation?
4. Give a brief account of the general properties of the chlorides, oxides and sulphides of Ca, Fe, and Pb.
5. Upon what chemical changes do the ordinary processes of photography depend, *i.e.*, in exposure, developing, fixing and toning?
6. What chemical changes take place during the extraction of gold by Cl, KCN and Hg?
7. Why are the metals Palladium, Iridium and Platinum classed together?
8. How many grammes of anthracite containing 90 % carbon are required to reduce 10 kilos of ZnO to metallic Zn, and what volume of CO_2 would be produced at 819°C and 720 mm. bar. pressure? Zn = 65, C = 12, one litre of H = ·09 gm.

PRACTICAL CHEMISTRY.—FOUR HOURS.

PHYSICS.

PASS, HONOURS AND SCHOLARSHIPS.

1. An open capillary tube of glass, inclined upwards, is attached to a vessel containing mercury; it is found that the mercury in the tube does not rise to the level of the mercury in the vessel: explain this phenomenon.

   A clean glass tube with a bore 0·2 mm. in diameter is placed vertically with its lower end dipping into a liquid of density 0·8; the difference of level between the surface of the liquid inside the tube and that of the liquid outside the tube is 6 cms:—find the surface tension of the liquid, assuming the angle of contact to be zero. Explain the exact meaning of the numerical result.
2. A few drops of a liquid rest on the surface of the mercury in a barometer tube; explain how the pressure of the vapour varies with alteration of the volume of the space above the mercury, and with change of temperature.

   Liquid in an open vessel is placed in a closed apparatus; describe, with full explanation, the arrangements you would make so that the volume of the liquid in the vessel should continuously diminish.

3. Explain the meaning of the terms specific heat and latent heat. What unit is used for the measurement of quantities of heat?

   A body whose mass is 100 grammes loses heat at the rate of 80 calories per minute, its temperature falls a degree centigrade in 30 secs.; find the specific heat of the substance.

4. Describe Kundt's method of finding the velocity of sound in a gas.

   Show how such an experiment may be used to determine the ratio of the specific heat of the gas at constant pressure to the specific heat at constant volume.

5. Describe the construction, and explain the action of the eye considered as an optical instrument. Is the refractive system achromatic?

   What form of lenses is used by short-sighted and what by long-sighted persons? Explain fully why these forms are adopted in each case.

6. Explain why a narrow slit and a lens or system of lenses are necessary in any form of spectroscope.

   Give the complete argument which leads to the conclusion that sodium vapour probably exists in the sun's atmosphere.

7. Give a brief account of some of the phenomena connected with polarised light.

8. Describe, with full theoretical and practical detail, a measurement of some electrical quantity which you have carried out.

BOTANY.

Illustrate your answers by means of drawings.

1. Give a general account of the *Siphoneæ*, with a more detailed description of *Vaucheria*.

2. Describe the sexual reproductive process and its results in the *Oomycetes* and in the *Ascomycetes*.

3. Describe *Lycopodium*.

4. Write short explanatory notes on the following:—(1) Plastids, (2) Heterostylism, (3) Saprophyte, (4) Symbiosis, (5) Diaheliotropism.

5. What is meant by *Hydrotropism?* Describe experiments by means of which it may be demonstrated.
6. Give an account of the *Andrœcium* under the following heads—(1) position; (2) relation to other parts of the flower; (3) structure; (4) chief modifications.

PRACTICAL BOTANY.—THREE HOURS.

ZOOLOGY.

Illustrate your answers by means of drawings.

1. Describe *Monocystis*, and give a general account of the Sporozoa.
2. Describe the ambulacral system of vessels in the Holothuroidea.
3. Briefly characterise (1) Turbellaria; (2) Crinoidea; (3) Amphineura.
4. Describe the organs of excretion in (1) *Nereis;* (2) *Palinurus;* (3) *Helix*; (4) an Insect.
5. Describe the arrangement of the carpal and tarsal bones (*a*) in a typical pentadactyle Craniate; (*b*) in a Bird; (*c*) in a Mammal.
6. Describe the pectoral and pelvic arches of the Pigeon. In what chief points do they differ from the corresponding parts in Mammals.

PRACTICAL ZOOLOGY.—THREE HOURS.

PHYSIOGRAPHY.

1. Describe, and illustrate by means of sketches, the various stages in the evolution of a great mountain range as the result of folding.
2. Explain, and illustrate by means of sketches, the chief ocean currents of the world, and show their relation to the prevalent winds.
3. What is the intermediate air current blowing from the South Pole towards the Equator? Show by sketches the direction in which it is deflected, and account for its origin. What grounds, if any, are there for supposing that the Poles are not the coldest spots on the earth's surface?

4. On what conditions does climate depend? In what way does the carbon dioxide in the atmosphere help to control climate? How have variations in climate in past geological time been explained as the result of variations in the supply of carbon dioxide in the earth's atmosphere?
5. Draw a sketch section anywhere from the south coast of Australia through the Lake Eyre region to the MacDonnell Ranges, and explain the past physical geography of the country traversed by the section as interpreted by its geological characters. Why is part of this area liable to earthquake shocks?
6. What are the chief arguments for or against the Theory of Evolution (*a*) in the organic world, (*b*) in the inorganic world and universe?

LOGARITHMS, TRIGONOMETRY AND GRAPHICAL ALGEBRA.

TWO HOURS.

1. Find the value of the seventh root of ·02357, also the value of

$$\left(\frac{325.6 \times \cdot 6231}{32 \cdot 24}\right)^8$$

and find a value of n satisfying the equation

$$(1 \cdot 045)^n = 2\tfrac{1}{2}.$$

2. Prove the formula

$$\tan\frac{B-C}{2} = \frac{b-c}{b+c}\cot\frac{A}{2}.$$

A is distant 172·3 chains from O in direction N. 37° 18′ E.; B is distant from O 231·2 chains in direction N. 57° 16′ W. Find the distance AB, and the bearing of B as seen from A.

3. From O, A is distant 67·12 chains in direction N. 32° 42′ E., B 87·13 chains in direction N. 81° 16′ E., and C 42·14 chains in direction S. 54° 32′ E. Find the area of the triangle ABC.
4. A wall runs due E. and W. with a path on the south side of it: at noon the shadow of the wall just extends across the path; at 2 p.m. the sun's bearing being N. 25° W., and altitude 50°, the shadow extends just across the path. Find the sun's altitude at noon.

5. Use your tables to plot the curves

$$y=\sqrt{x} \quad (0<x<4)$$

$$y=\sin x \quad \left(0<x<\frac{\pi}{2}\right)$$

on the squared paper provided.

6. Prove that the equation

$$y=mx+c$$

represents a straight line, and draw the lines

(1) $y=2x$
(2) $x+2y=0$
(3) $y=2x+1$
(4) $x+2y=2$

What sort of figure do they enclose?

7. Reduce the equation

$$y^2+y=3x+5$$

to the standard form for the parabola ($y^2=4ax$), and find the coordinates of the focus and vertex.

Trace the curve.

8. Trace the ellipse

$$x^2+4y^2=5.$$

Find the coordinates of the middle point of the chord

$$y=x+1.$$

DYNAMICS.

TWO HOURS AND A HALF.

1. What is meant by a point having velocities in two different directions? Illustrate your answer by an example. State and prove a proposition which relates to the composition of two simultaneous velocities in different directions.

If a man motoring along a road at 20 miles per hour notices a shower of rain apparently falling vertically with a velocity of 35 miles per hour, find, by the help of the tables, the real velocity and direction of the rain.

2. What is meant by "acceleration"? Can an acceleration be correctly described as so many feet per second?

A body slides down a smooth inclined plane whose length is 160 feet and height 2 feet; if the body starts from rest at the summit, find the time taken and the velocity generated. [$g=32$]

Find the horse-power of an engine which would pull 100 tons up the plane in one minute.

3. A ball of mass 3 lbs. is dropped from the top of a tower 192 feet high, and at the same time a ball of mass 1 lb. is projected vertically upwards with velocity 53 feet per second, where do they meet?

If the co-efficient of elasticity is $\frac{1}{2}$, find how long after the collision each will reach the ground.

4. A mass of 10 tons is uniformly accelerated in the direction of its velocity, and its speed changes from 20 to 60 miles an hour in 16 seconds. Find (i.) the initial momentum, (ii.) the final momentum, and (iii.) the force.

5. A mass m is placed on a smooth inclined plane of angle α at a point a inches from the top; another mass m' is held just over the top edge of the plane. The two masses are connected by a string l inches long and are let go simultaneously.

Prove that the string will become tight after a time $\sqrt{\frac{2(l-a)}{g(1+\sin\alpha)}}$, and that the common velocity of the two particles immediately afterwards will be

$$\frac{m'-m\sin\alpha}{m+m'}\times\sqrt{\frac{2(l-a)g}{1+\sin\alpha}}.$$

6. Find the horse-power of an engine which can pull a train of mass 400 tons up a slope of 1 in 100 at a rate of 30 miles per hour, the resistance due to friction being 16 lbs. per ton.

7. Find the power necessary to support W lbs. in the case of a system of n pulleys, each weighing w and hanging in the loops of separate strings. Suppose the number of pulleys to be five, and that the string surrounding the second highest pulley cannot support a tension of more than 5 lbs., and that each pulley weighs 4 ozs., find the greatest weight which can be raised with the system?

8. What is meant by a couple? Prove that the sum of the moments of the forces forming a couple is the same at every point in their plane.

Forces of 3, 7, 5, 1, x, y lbs. act along the sides AB, BC, CD, DA, and the diagonals CA, DB of a square. Find x and y if the system constitutes a couple.

SECOND YEAR EXAMINATION.

BIOLOGY (Zoology) I.

1. Describe the nervous and excretory systems of the Cephalochorda.
2. Describe the respiratory system of the Cyclostomes.
3. Describe the origin, course and distribution of the five first cranial nerves in the Elasmobranchs.
4. Give an account of the development of the central nervous system in *Teleostei*.
5. Trace the origin and early history of the mesoderm in the Frog.
6. Describe the skull of the Lacertilia.

BIOLOGY (Zoology) II.

1. Describe the development of the spinal nerves in the Chick.
2. Give a general account of the skeleton and the teeth of the *Edentata*.
3. Describe the structure of the forelimb in the Sloth, the Cetacea, the Chiroptera, and the Horse.
4. Describe the various modes of development of the amnion in Mammals.
5. Give an account of the ventricles and their relations in the brain of the Sheep.
6. Define the chief forms assumed by the allantoic placenta of Mammals.

PHYSICS I.

PASS.

1. When one physical quantity is known to be proportional to some other quantities, and to these only, and further that it varies as some powers of these quantities, it is sometimes possible to find the exponents of these powers by reasoning based on the theory of dimensions:—give two examples illustrating this statement.

2. Explain how the compressibility of a liquid may be determined.

   Find an expression for the correction which must be applied to the readings of a piezometer on account of the compressibility of the material of which it is made.

3. Show, from the principles of the Kinetic Theory, that the product of the pressure and the volume of unit mass is equal to two-thirds of the average translational kinetic energy of the molecules.

   Assuming, if heat is communicated to a gas, that the ratio of the heat which goes to increase the internal energy of the molecules to the heat which increases their translational energy is constant, find an expression for the ratio of the specific heats in terms of this constant.

4. A stretched wire is subjected to a cycle of changes like the working substance in a Carnot's engine, the variables being the tension, the elongation and the temperature, the elongations being very small:—apply the principles of thermo-dynamics to this case, and deduce an expression giving the relation between the change of temperature and the elongation when the wire is adiabically extended.

5. Show fully how the changes in the total energy of a substance due to expansion may be exhibited in a diagram.

6. Explain Van der Waals' equation, and show how it agrees generally with experimental results.

   The critical pressure of ether is 36·9 atmos., and its critical temperature 463 absolute; for sulphur dioxide the values are 78·9 atmos., and 428·4 absolute. At what temperature will ether have a pressure of 33·45 atmos., given that when the temperature is 150°C, the pressure of sulphur dioxide is 71·45?

PHYSICS II.

1. Find the dimensions of quantity of electricity, magnetic force, current and resistance in electro-magnetic measure.

2. Find the capacity per unit length of a condenser consisting of two coaxial cylinders.

A condenser, two microfarads capacity, is to be constructed of tin foil sheets 50 x 70 cms., separated by oiled paper 0·3 mms. thick; the specific inductive capacity of the paper may be taken as 3:—how many sheets of tinfoil are to be used? the electro-static unit of capacity in terms of the electro-magnetic being equal to $\frac{1}{v^2}$.

3. Explain with full detail how you would proceed to standardise ammeters reading to 100 ampères, if no electrical apparatus previously standardised was available. If it is considered necessary to construct apparatus, of which the dimensions are essential, approximate sizes must be given with full explanation.

4. Find from Ampère's law the magnetic force at a distant point on the axis of a circular circuit.

   Find an expression for the current in the circuit such that the magnetic force at a distant point on the axis shall be the same as that due to a small magnet of moment M at the centre of the circuit, the axis of the magnet being in the axis of the coil.

5. Find an expression for the mechanical force on an element of current in a magnetic field, and give with full explanation the direction of the force.

   Show that when a closed circuit is moved in a magnetic field there is a mechanical force on the circuit opposing the motion.

6. Show that for two circuits the number of magnetic lines linked with the first for unit current in the second is equal to the number linked with the second for unit current in the first.

   Find an expression for the energy stored in the magnetic field due to two circuits in which steady currents are flowing.

GEOLOGY.

Not more than SIX *questions are to be answered.*

1. Explain the nature of the chief evidences of glaciation in a region from which glaciers or ice-sheets have disappeared; and explain the effect of pressure on the melting point of ice, and the bearing of this upon regelation and glacier movement.

2. Describe and illustrate with sketches the differentiation of rock magmas, and show how variation of rock species may be explained on this hypothesis. What is Daly's rival hypothesis that variation is brought about by overhead stoping? Describe and illustrate with sketches the latter hypothesis?

3. Describe briefly but clearly the outlines of Professor Chamberlin's Planetesimal Hypothesis. How is diastrophism of the earth's crust to be explained on this hypothesis?

4. Explain and illustrate with sketches (*a*) antecedent rivers, (*b*) superimposed rivers, and (*c*) various types of stream piracy.

5. Describe briefly the chief calcium minerals, and explain the part they play in building the rocks of the earth's crust.

6. What theory may be advanced to explain the origin of (*a*) the nodular tufa-limestones of South Australia and West Australia, and (*b*) of the porcellanite and quartzite of the Desert Sandstone of Australia?

7. What are the arguments for and against the view that the earth's crust is in a state of isostatic equilibrium.

8. What are the chief characteristics of the metamorphic rocks? Explain why, when sedimentary rocks derived from granites become metamorphosed, minerals of the andalusite group become developed in preference to the felspars.

9. Explain and illustrate with examples taken from Australian Geology the following:—Inlier; outlier; trough fault; strike fault; unconformability.

GEOLOGY—(STRATIGRAPHICAL).

1. Describe and illustrate with sketch sections the general sequence of the strata in the Permo-Carboniferous system of New South Wales. State what you know about the fossil plants, and the mode of occurrence of coal in that system.

2. Describe and illustrate the chief forms of life characteristic of the Cambrain Period in Australia, and give a general account illustrated with sections of the Australian Cambrian rocks.

3. What evidence is there in favour of the existence of a large land area to the south of Victoria and South Australia in Palæozoic time?

4. What important changes have taken place in the Physical Geography of the World since the close of the Mesozoic Era? To what causes may they be ascribed?

5. What are the chief characteristics of the (1) Brachiopods, (2) the Pteropods, (3) the Graptolites, and (4) the Cephalopods? Mention three examples of each, and give the geological range of each of the examples selected by you.

6. What are the characteristics of the following, and what is their geological range:—*Favosites*, *Crioceras*, *Pentacrinus*, *Ethmophyllum*, *Lepidodendron Australe*, *Halysites*, *Rhacopteris*, *Nubecularia?*

MINERALOGY.

1. What various minerals may be produced as the result of weathering of the following: Franklinite, Smaltite-Chloanthite, Copper Pyrites and Stibnite?

2. What is the relation between the cleavage of a mineral and its hardness? Illustrate your answer with sketches.

3. What various minerals may result from the contact metamorphism of limestones by granites? Account for the fact that minerals of the andalusite family usually result from the metamorphism of *sedimentary* rocks.

4. Give a short account of the chief hydrous silicates, and describe their habit and mode of occurrence.

5. By what methods, and upon what different kinds of evidence, would you compare chronologically the Fingal coal-measures of Tasmania, the Mersey coal-measures of Tasmania, the Broadsound coal-measures of Queensland, the Leigh's Creek coal-measures of South Australia, the Gondwana system of India? What is the chief difference in chemical composition between the Palæozoic and the Mesozoic coal-seams of Australia respectively?

6. What is the mode of occurrence and probable origin of the zinc and lead ores of Laurium in Greece, and of the hæmatite deposits of England? What is the chief *rôle* that

limestones have played in controlling the occurrence of ore deposits? In what way may the genesis of ore deposits be controlled by magmatic differentiation and magmatic extraction?

DIFFERENTIAL AND INTEGRAL CALCULUS.

1. Differentiate the following expressions:—

(i.) $\dfrac{x^2+1}{x}$,

(ii.) $\dfrac{x}{x^2+1}$,

(iii.) $\log(x-1)-\dfrac{2x-1}{(x-1)^2}$,

(iv.) $\log\sqrt[4]{\dfrac{1+x}{1-x}}-\dfrac{\tan^{-1}x}{2}$.

2. Show that if $y=f(x)$ is a continuous function, there are turning points of the curve where $\dfrac{dy}{dx}$ vanishes and changes sign as x passes through the values for which $\dfrac{dy}{dx}$ vanishes.

Discuss the curve $y^2=\dfrac{x}{1+x^2}$, finding its turning points and points of inflection. Also trace the curve.

3. In the sphere

$$x^2+y^2+z^2=a^2,$$

find from the definition of the symbols the values of

$$\frac{\delta z}{\delta x},\ \frac{\delta z}{\delta y},\ \text{and}\ \frac{dz}{dx},$$

and state the geometrical meaning of each.

4. Prove that

$$\rho=\frac{(1+y'^2)^{\frac{3}{2}}}{y''},$$

and find the length of the radius of curvature at an extremity of the minor axis of the ellipse

$$\frac{x^2}{a^2}+\frac{y^2}{b^2}=1.$$

5. Discuss shortly the methods to be employed in integrating a Rational Algebraic Fraction, and illustrate your answer by the cases

$$\frac{x^2}{x^3+1}, \text{ and } \frac{x}{x^3+1}.$$

6. Evaluate the following integrals :—

(i.) $\displaystyle\int \frac{(2x+1)dx}{\sqrt{x^2+4x+20}}$

(ii.) $\displaystyle\int \frac{(2x+1)dx}{\sqrt{12-x^2-4x}}$

(iii.) $\displaystyle\int \frac{d\theta}{\cos^2\theta\sqrt{4-\tan^2\theta}}$

(iv.) $\displaystyle\int x^3\cos x\, dx.$

7. Define the Definite Integral as the Limit of a Sum, and show how this may be obtained when the Indefinite Integral can be found.

Write down the values of

(i.) $\displaystyle\int_0^{\frac{\pi}{2}} \sin^4\theta\, d\theta,$

(ii.) $\displaystyle\int_0^{\pi} \sin^2\theta\cos^3\theta\, d\theta,$

(iii.) $\displaystyle\int_{-\frac{\pi}{2}}^{\frac{\pi}{2}} \cos^6\theta\, d\theta.$

8. Prove that the C.G. of a solid hemisphere of radius a is at a distance $\frac{3}{8}a$ from its centre along the radius perpendicular to its base.

9. Prove that the Radius of Gyration about its axis of a segment of the solid formed by the revolution of the parabola

$$y^2 = 4ax$$

about its axis is equal to

$$\frac{b}{\sqrt{3}}$$

where b is the radius of the base of the segment.

STATICS AND DYNAMICS.

1. Prove the formulæ for finding the c.g. of a body

$$\bar{x}=\frac{\Sigma(mx)}{\Sigma m}$$

$$\bar{y}=\frac{\Sigma(my)}{\Sigma m}$$

Write down the corresponding formulæ when it is necessary to utilise the Integral Calculus.

Find the c.g. of a circular arc of angle $2a$.

2. What is the Principle of Conservation of Energy?

A bullet moving with a velocity of 1400 feet a second passes through a plank, and its velocity is thereby reduced to 1000 feet a second. Will it pass through two such planks, and if so what velocity will it have afterwards?

3. An isosceles triangle whose vertical angle is $2a$ is described on a side of a square as base. Find the centre of gravity of the figure thus formed.

If this figure is placed in a vertical plane, with the side of the square opposite the triangle in contact with an inclined plane rough enough to prevent sliding, prove that the figure will be on the point of upsetting when the angle of the plane β is given by the equation

$$3\cot\beta(4+\cot a)=12+6\cot a+\cot^2 a.$$

4. Write down the differential equation of simple harmonic motion, and integrate it.

Shew that the time of a complete oscillation is $\frac{2\pi}{\sqrt{\mu}}$.

Also that in an elastic body obeying Hook's Law, when vibrations are set up, the motions are simple harmonic motions.

An elastic string of natural length l becomes of length $l+\lambda$ when supporting a mass m hanging freely. If another mass m is suddenly affixed to the first mass find

(i.) The time of complete oscillation of $2m$ about its mean position.

(ii.) The length of the string if the mass $2m$ is brought to rest.

5. Prove that when a particle describes a curve the tangential and normal velocities are $\frac{ds}{dt}$ and 0, and its accelerations in those directions are $\frac{d^2s}{dt^2}$ and $\frac{v^2}{\rho}$.

A mass 3 oz. lies on a smooth horizontal table; to it is attached a string leading through a hole in the table to a mass 5 oz. hanging at the other end. With what angular velocity must this mass on the table be made to revolve in a circle of radius 5 inches in order that it may keep the 5 oz. mass at rest?

6. Define the moment of inertia of a rigid body about an axis; and shew that in the case of a plane body the moment of inertia about an axis perpendicular to the plane of the body is equal to the sum of the moments about two perpendicular axes lying in the plane.

Find the moment of inertia of a circular plate about an axis through its centre at right angles to its plane, and deduce its moment about a diameter, and its moment about a tangent.

7. A flywheel of mass 2 tons is revolving 5 times a second. A brake is applied along the circumference, and reduces its rotational speed to 2 revolutions a second in 20 seconds. If the radius of gyration is $\frac{5}{6}$ of the radius of the wheel, and the pressure on the brake is 2000 lbs. weight, find the coefficient of friction.

8. Over a rough pulley of mass 2 lbs. is hung a string carrying at one end A a mass 3 lbs., and at the other end B a mass 1 lb., to which is attached by another string another mass 5 lbs. at C. Find the acceleration of the system and the tension of the string BC.

THIRD YEAR EXAMINATION.

CHEMISTRY I.—(Inorganic).

1. What are endothermic and exothermic compounds? Give two examples of each.
2. Under what circumstances are ozone and hydroxyl found in nature? How are their amounts estimated?
3. What is meant by Catalysis? Give instances.
4. Are there any objections, difficulties or exceptions to the periodic classification of the elements?
5. How does silver occur in nature, and how is it extracted from its ores?
6. What are the principal changes which take place when metals are mixed or converted into alloys? Are alloys chemical compounds?
7. Give an account of the oxides of iron and manganese respectively, and of some of the principal compounds yielded by them.

CHEMISTRY II.—(Carbon Compounds).

1. How would you proceed to make a proximate analysis of a vegetable product, *e.g.*, of bitter almonds?
2. How are the molecular weights of non-volatile acid, basic and neutral substances respectively, determined?
3. Give a concise account of the fatty series of aldehydes.
4. How are the aromatic acids classified?
5. What are the principal characteristics of the monoses and bioses?
6. Give an account of the preparation and constitution of rosaniline, pararosaniline and phenolphthalein respectively. What are the general principles of dyeing?
7. What is known as to the constitution of camphor?
8. Give an account of the Tartaric acids; also of furmaric and maleic acids.

CHEMISTY III.—(History and Philosophy).

1. Sum up in brief the knowledge of chemistry possessed by the alchemists.
2. How far did the work of the iatro-chemists extend the range of chemistry?
3. Give a concise account of Dalton's life and work.
4. What were (*a*) Dumas' type theory, (*b*) Laurent and Gerhardt's radicle theory, and (*c*) Frankland's doctrine of the saturation capacity of the elements?
5. What advances in chemistry were made by Cavendish and Priestley?
6. Give a brief account of some of the most important advances made in physical chemistry during the last twenty years.
7. What were the older theories as to the nutrition of plants? What is known as to nitrification and the assimilation of free nitrogen by plants?

PALÆONTOLOGY.

Six questions only to be attempted, but question 7 must be included. All answers to be fully illustrated.

1. Give a general account of the Crinoidea, illustrating important structural characters by sketches, and for comparison give a summary of the main points of difference shown in the hard structures of the Cystoidea and Blastoidea.
2. Give a detailed account of the Protrematous and Telotrematous Brachiopoda, describing two genera belonging to each order.
3. From a study of the Brachiopoda it is seen that the groups of latest development display the greatest generic and specific differentiation. (*a*) Give instances illustrative of this statement, and (*b*) give a brief account of the evolution of the Brachiopoda.
4. Describe the structure and form of the valves of the Pelecypod shell.
5. Give a general account of the Dibranchiate and Tetrabranchiate Cephalopoda. Describe one genus of each order into which they are subdivided.

6. Explain in detail the structure of the Trilobita.

7. What are the following fossils? In what formations does each occur? Draw attention to any peculiarity of structure displayed by the forms:—*Protoretepora ampla; Clypeaster; Marsupites; Stenopora; Hippurites; Endoceras; Nerinea; Hyolithes lanceolatus; Tentaculites; Spirorbis.*

PETROLOGY.

1. Describe the experiments of Morocewiz, and the conclusions to which he was led with regard to the behaviour of magmas supersaturated with alumina.

2. Write a short essay on the use of graphic methods for indicating the chemical compositions of eruptive rocks.

3. Compare and contrast the porphyritic structures met with in eruptive and in metamorphic rocks respectively.

4. Enumerate the chief varieties of alkaline eruptive rocks, describe their essential characteristics, and comment on their distribution in Eastern Australia.

5. Describe the principles underlying the calculation of the "norm" in the American Rock Classification.

6. Give a short history of the controversy with regard to the origin of granite.

OPTICAL MINERALOGY.

TIME, THREE HOURS.

1. Describe three distinct methods for obtaining the refractive index of a mineral in a micro-section.

2. Describe in detail a method for determining the optical sign of a biaxial mineral in a section at right angles to an optic axis. What information can such a section furnish as to the magnitude of the optic axial angle?

3. Describe the phenomena of pleochroism and the method of determining this property in haphazard sections in a rock slide.

4. How can sections of plagioclase in the zone [010] be recognised in thin section, and what is their value in determination of the nature of the felspar?

5. Apply Huygen's construction to the case of refraction through a plate of a positive uniaxial mineral cut so that the optic axis is in the plane of incidence and in the plane of section.

6. What is meant by "over correction" of a microscope objective?

   What is the effect of using a cover glass with an objective corrected for use without one; and in what way is the effect due to different thicknesses of cover glasses neutralised?

DEPARTMENT OF ENGINEERING.

FIRST YEAR EXAMINATION.

(CIVIL, MINING, MECHANICAL AND ELECTRICAL.)

APPLIED MECHANICS.

1. Describe the process of testing specimens of structural steel in tension; and the method of determining the elastic limit, yield point, ultimate strength and ductility. Supply figures giving probable values, and draw up a tabulated report on the results of testing; also, sketch the stress-strain diagram.

2. How would you determine the coefficient of elasticity in the following cases?—
   (*a*) A piece of structural steel in tension.
   (*b*) A square prism of concrete in compression.
   (*c*) A timber beam subjected to transverse test.

3. Make sketches of the following riveted joints, giving the possible modes of failure:—
   (*a*) Single riveted butt joint in single shear.
   (*b*) Double riveted butt joint in double shear.
   (*c*) Any form of group joint for four steel plates, giving plate area, rivet area, bearing area, and probable breaking load.

4. A beam 20 feet long is supported at each end and loaded in the following manner; calculate the maxima bending moments and shearing stresses, and sketch diagrams:—
   (*a*) Loaded with a uniformly distributed load over the whole span of 4 tons per foot run.

(*b*) Loaded with a uniformly distributed load over one-half of the span of 4 tons per foot run.

(*c*) Loaded with three concentrated loads of 10 tons each, spaced equidistant; one in the centre, and one on each side of the centre.

5. Investigate the moment of resistance in a rectangular section of a beam; also, the resistance to a twisting moment in a circular shaft.

Calculate the horse-power transmitted by a shaft of 3 inches diameter at 100 revolutions per minute if the intensity of stress is 10,000 lb. per square inch.

6. A timber viaduct consisting of two beams of ironbark timber 12 inches by 12 inches in cross-section is supported on timber trestles, and carries a single line of railway. The span of the beams is 8 feet. Calculate the load per foot run, uniformly distributed over the beams which could be safely carried. Make sketches showing one span and one trestle pier, writing on all necessary dimensions.

7. Investigate the equation for the intensity of shearing stress in a beam of rectangular cross-section and derive the expression

$$\frac{S}{2I}\left(y_1^2-y^2\right)=\rho_s.$$

Calculate the best proportion of span to depth in a beam if the modulus of rupture is 10,000 lb. per square inch, and the horizontal shearing resistance 1000 lb. per square inch. The load is distributed.

*8. Make sketches showing how you would design an ordinary plate web girder to carry a distributed load of 2 tons per foot run; over a span of 40 feet. Make all necessary calculations as to bending moments; shearing stresses; area in flanges; size, pitch, and bearing area of rivets; thickness of web plate to resist buckling; stiffeners and joints.

DESCRIPTIVE GEOMETRY.

No written descriptions are required, but the various figures must be appropriately lettered.

1. (*a*) Describe a circle to pass through a given point P, and touch two given lines BA, AC.

---

* NOTE.—A good answer to this question will count twice as much as any of the foregoing questions.

(*b*) Construct a triangle, having given the vertical angle, altitude, and perimeter.

(*c*) Illustrate the methods you adopt practically for describing the ellipse, the parabola, and the hyperbola.

(*d*) Construct an epicycloid, and determine the tangent and normal for any point on the curve.

Diameter of generating circle, $1\frac{1}{2}$ inches; and of directing circle, 4 inches.

2. (*a*) Having given the projections of a line AB, to find the shortest distance of the line (produced if necessary) from *xy*. [*xy* is the intersection of the horizontal and vertical planes.]

(*b*) Draw the plan and elevation of any line 3 inches long, which shall be equally inclined to the planes of projection, and not parallel to *xy*.

3. (*a*) Determine the true distance between two given parallel oblique planes.

(*b*) Having given an oblique plane VTH, and a point A in it, to determine the projections of a straight line AB, which shall lie in the plane, and be inclined at a given angle *a* to the horizontal plane.

(*c*) A plane is equally inclined to both co-ordinate planes, and the real angle between the traces of the plane is 50 degrees. Draw the traces.

4. Construct some illustrations of the projection of shadows of geometrical objects under the various conditions commonly occurring.

5. (*a*) Draw the projection of a right-handed V threaded screw and a longitudinal section of the nut.

(*b*) Show how you would obtain an approximate development of the surface of a sphere.

6. Represent by isometric projection a ring of 4 inches internal diameter and $\frac{1}{2}$ inch square section.

MATHEMATICS, CHEMISTRY AND PHYSICS.

The same papers as those set in the First Year of Science.

SECOND YEAR EXAMINATION.

MECHANICAL ENGINEERING I.

Not more than FIVE *questions to be attempted, but these must include questions from both divisions A and B.*

A.

1. (*a*) A cage weighing one ton is being raised from a mine with an acceleration of 10 feet per second. Find the tension in the rope. If a miner (weight 12 stone) is raised with the cage, find the pressure between him and the cage.

(*b*) A string wound round a horizontal drum carries a weight of 35 lbs. at its free end. As the weight falls, rotating the drum, it winds up a string inside, the tension required to wind up the spring increasing by 1 lb. for each foot the weight falls. Draw force and resistance diagrams to a distance base, and find the kinetic energy of the weight, and the energy stored in the spring, when the weight has fallen 20 feet. Find also how far the weight will fall before it first comes to rest.

(*c*) Prove that the kinetic energy of a train of railway carriages moving with velocity v is

$$\left\{ W + w\left(1 + \frac{k^2}{r^2}\right) \right\} \frac{v^2}{2g} \text{ ft. lbs.}$$

where w denotes the weight of the wheels and axles; W the weight of the rest of the train; r the radius of the wheels; and k the radius of gyration of a pair of wheels about their axis, the units being feet, lbs. and seconds.

2. (*a*) A rod, 1 square inch in section and 5 feet long, carries a weight of 200 lbs., which drops through 2 inches before commencing to stretch the rod. Assuming all the energy of the blow to be stored up in the rod, and that the limits of elasticity are not exceeded, estimate the maximum intensity of stress induced in the rod. $E = 30 \times 10$ lbs. per square inch.

(*b*) Water is issuing from a nozzle of 2 inches diameter at a speed of 20 feet per second, and is impinging directly against a wall by which its momentum is entirely destroyed. Find the weight of water discharged per minute, the quantity of momentum destroyed per minute, and the pressure of the jet on the wall? What is the horse-power of the jet?

3. (*a*) State the general law connecting the effort E with the resistance R in a machine.

In a train of wheels it is found that efforts of 10 lbs. and of 40 lbs. overcome resistances of 85 lbs. and of 630 lbs. respectively. Estimate the resistances which will be overcome by efforts of 20 lbs. and of 30 lbs. If the velocity ratio of the train be 25 to 1, calculate the efficiency in each case.

(*b*) Prove that if two spur wheels work together with teeth formed so that the common normal at the point of contact of two teeth passes through the point of contact of the pitch circles, then the angular velocity ratio between the wheels remains constant. Show that involute teeth fulfil this condition, and point out the peculiar advantages and disadvantages of this form of tooth.

4. (*a*) What is meant by the Mechanical Efficiency of a steam-engine? Explain fully how you would ascertain it in the case of a stationary steam-engine.

(*b*) Describe generally the advantages in a steam-engine of

1. Compounding.
2. Superheating.
3. Steam Jacketing.

B.

5. Describe the apparatus of Savery (1698) for pumping water, and compare it with its modern representative, the pulsometer.

Describe the construction and mode of operation of the pulsometer, with the aid of neat detailed sketches, and explain briefly what you regard as the advantages and disadvantages of this form of pump.

6. Compare briefly the Carnot cycle of operations with that of Stirling.

In a Stirling's engine, fitted with a perfect regenerator, the maximum pressure is 115 lbs. absolute and the minimum 15 lbs. absolute, the higher and lower temperatures being 600 degrees and 70 degrees respectively. A perfectly reversible steam engine uses dry steam between the same limits of pressure. Compare the efficiency of the two engines; and if the piston speed and stroke be the same in each, compare the piston areas for equal power.

7. (*a*) A boiler working at 130 lbs. pressure, and taking in feed water at 60 degrees Fah., is found to evaporate 8 lbs. of water, to steam of dryness 0·75, per pound of coal. Assuming the calorific value of the coal to be 14,500 B.T.U., calculate the efficiency of the boiler. Also, estimate the number of pounds of water from and at 212 degrees Fah. that the boiler would completely evaporate per lb. of fuel. Why is it usual to express the performance of a boiler in this way?

(*b*) A steam jacketed engine, working with steam at an initial temperature of 239 degrees Fah., indicates 31 h.p., and discharges 740 lbs. of water per hour to the hot well at a temperature of 113 degrees Fah. The circulating water per hour is 15,000 lbs., and the initial and final temperatures of the circulating water are 45 degrees and 96·5 degrees Fah. Neglecting radiation, find the amount of heat per hour received by the steam from the jackets; and assuming the jackets to be supplied with boiler steam, and only the latent heat of the steam to be given up to the working steam, find the jacket steam used per lb. of cylinder feed.

8. Make neat sketches (plan and sectional elevation) of a simple slide valve showing the cylinder ports and the valve chest.

What are some of the defects of such a valve?

What is meant by the following terms:—Outside lap, inside lap, angular advance, lead? What is the effect of each of these on the indicator diagram?

Given the travel of the valve, the lead, the point of cut-off, and the point of release, find by means of any form of valve diagram the angular advance and the outside and inside laps.

APPLIED MECHANICS III.—(MACHINE DESIGN).

ONE question only to be answered from either Part A or B.

Students taking Honours MUST answer a question from Part A.

All drawings to be made on cartridge paper to the scales indicated. All necessary calculations and dimensions to be shown.

PART A.

1. Make a sketch design for the following:—Scale, $\frac{1}{8}$ full size. A machine to be set in the basement of a building to drive a wire rope for an elevator. Assume the driving power to be an electric motor running at 500 revolutions per minute, belted to the machine, and that the required speed reduction can be obtained by a single pair of pulleys, and one pair of machine cut gears, and that a plain band brake (wood faced) is fitted to the drum.

   Wire rope, $\frac{5}{8}$ inch diameter.

   Drum, 2 feet 3 inches diameter.

   Load on rope, 4000 lb.

   Speed of rope, 200 feet per minute.

   Length to be reeled in, 250 feet.

   Describe your method of procedure, calculations for power, etc., and show how you would proceed with the design in detail, giving sketches where necessary.

2. Make a sketch design for a simple vertical engine. Scale, $\frac{1}{8}$ full size.

   DATA—

   Diameter of cylinder, $7\frac{1}{2}$ inches.

   Stroke of cylinder, 10 inches.

   Steam pressure, 100 lb. per square inch.

   Revolutions per minute, 250.

   Mean cut off, 60 per cent. of stroke.

   Describe your method of procedure, giving calculations necessary, and show how you would proceed with the design in detail, giving sketches as required.

3. Design the reversing gear for a vertical engine, given the following—

Load on valve, 600 lb.
Travel of valve, $2\frac{1}{4}$ inches.
Angle of eccentric in advance of crank, 135 degrees.
Diameter of crank shaft, 3 inches.
Engine supported on steel columns, $1\frac{3}{4}$ inches diameter; centre of column to centre of engine in end elevation, 8 inches; gear is well clear in front elevation.
Centre of shaft to centre of valve rod eye, valve in mid position, 20 inches.
Eccentric sheaves to be split.
Drawing to be to a scale of half full size.

PART B.

1. Design the crank shaft, and one of the bearing frames, to suit the particulars given in the accompanying sketch. The frames are separate from each other, and are to be connected by rolled steel joists. Give reasons for the materials and working stresses adopted. Scale, half full size.

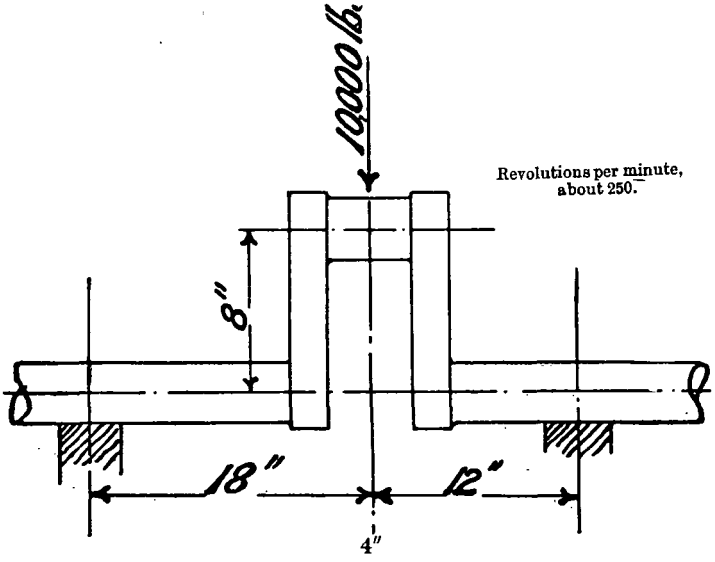

2. Design in detail the cylinder and valve for a vertical engine. Scale, half full size.

DATA—

Supported on one steel column in front, and a cast-iron column at back.
Cylinder diameter, $7\frac{1}{2}$ inches.
Stroke, 10 inches.
Piston rod diameter, $1\frac{1}{2}$ inches.
Revolutions per minute, 250.
Cut off, ·6 (mean).
Steam pressure, 100 lb. per square inch.
Centre of cylinder to centre of valve rod, $8\frac{1}{2}$ inches.

3. Referring to the previous question, having given that the length of the connecting rod is 24 inches, design the back column and guides to suit the engine there given, making suitable allowance for clearances required by crosshead, connecting rod, etc., and for fixing column to cylinder and bed plate. Scale, half full size.

4. Design a gunmetal distributing valve box, suitable for a pressure of 150 lb. per square inch, for attaching to the delivery flange of a feed pump, and arranged to deliver to either of two pipes, each $2\frac{1}{2}$ inches diameter. Scale, full size.

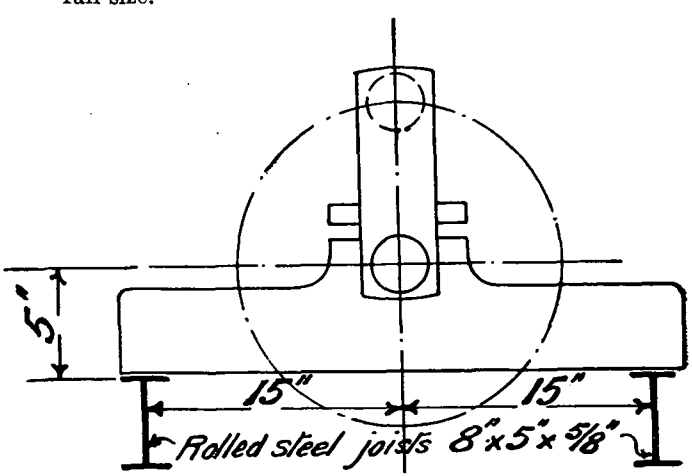

CIVIL ENGINEERING I.

PASS.

1. Make sketches showing how you would construct timber viaducts of 10 and 25 feet span on timber trestles of 8 and 20 feet height respectively, to carry a live load of 3 tons per foot run on a single line of way.
2. Describe the process of mining and lining a length of tunnel, giving sketches showing the necessary timbering in heavy ground.
3. Make sketches illustrating the method of constructing a brick culvert of about 15 feet span to carry a stream of water through a railway embankment. Explain how you would determine the maximum flow of water through the culvert for a given catchment area and rainfall, assuming all necessary data.
4. Make a sketch of a reservoir embankment consisting of suitable material with a water-tight core of puddle. Show the waste weir and the bye-wash, also the method of drawing off the water from the reservoir.

CHEMISTRY.—(Mining).

1. Why do certain impurities in water render it unfit for use in steam boilers? How can hard water be softened? Give equations.
2. What are the principal methods of preserving iron and timber used for structural purposes?
3. Give an account of the composition, preparation and properties of the high explosives known as guncotton, dynamite and nitro-gelatine. Why are their fumes poisonous?
4. Give an account of the composition, preparation and properties of the common black, red and brown pigments respectively.
5. Give an account of the metal zinc, including its occurrence, extraction, properties and uses; also of its principal alloys.
6. How would you make a quantitative analysis of an alloy containing Pb, Bi and Sn?

7. What is petroleum, and how is it refined? What uses are made of the products for engineering purposes?
8. What are the principal changes brought about in metals like iron, copper and gold by the presence of small quantities of other elements?
9. How would you detect the presence of the following in a mixture—*i.e.*, in the presence of each other—viz., a chloride, a soluble sulphide, sulphite, thiosulphate and nitrite? How far would the reactions interfere with one another?

SURVEYING—(Civil, Electrical and Mining).

I.

Mining students omit 2 and 4.

Answers should be put in the briefest possible form, and diagrams freely used to illustrate them.

Notice.—*All students are required to attend the practice and examination in the field on 13th to 15th December inclusive, unless specially excused therefrom in writing under the hand of the Lecturer.*

1. (*a*) Find the correct length of a line from the following data:—

   Apparent length by "chaining," 7925·16 links; at temperature 82 degrees Fahr.; 40 chains requiring sag-correction; length suspended, 1 chain each time.

   Steel tape, standard length at 50 degrees Fahr. and 10 lbs. tension. Weight 0·5 lb. per chain.

   Average defect of horizontality, 0·5 link.

   Average error of alignment, 0·3 link.

   (*b*) Shew how to find the sag-correction for a riband on a slope.

   (*c*) What are the advantages accruing from the use of a long steel riband?

2. (*a*) Shew how to set out a circular curve by means of (i.) two theodolites; (ii.) a theodolite and chain; (iii.) by means of chain and ranging rods alone.

   (*b*) How are (i.) graduated curves, (ii.) curves of adjustment, (iii.) ellipses, (iv.) parabolas, etc., set out?

   (*c*) Shew how to eliminate error of circle graduation in the setting out of an angle of, say, 60 degrees.

   (*d*) How would the character of (i.) a theodolite and (ii.) a level be ascertained?

3. (*a*) Write out a simple example of 4 lines constituting a "close," and shew how to distribute the error of the close, the weight assigned to measurement of the lines being, say, 1, $\frac{1}{2}$, $\frac{1}{2}$, $\frac{1}{3}$.

(*b*) Shew how to set out the opposite intersection of two roads, with parallel sides, meeting at an angle of 120 degrees, the widths being 2 and 3 chains.

4. An ellipse, the semi-axes of which are 2000 and 1000 feet, is to have described within it a second ellipse of half its area: the axes of which are less than the former by the same number of feet. What are the axes of the inner ellipse?

5. (*a*) Shew how the flow of liquids from orifices is deduced from the equation between the potential and kinetic energies of the system.

(*b*) What modifies the discharge given by the formula

$$q = av = a\sqrt{2gh}?$$

(*c*) How is the formula for an overfall deduced?

(*d*) Under what circumstances do formulæ for flow over weirs become uncertain?

(*e*) Give an account of the part played by "contraction" in hydraulic formulæ.

6. (*a*) Describe the characteristics of flow in a channel, and a river. (*b*) What methods of gauging are possible? (*c*) What instruments would be used? and (*d*) what are their peculiarities? (*e*) Give an example of the graphic method of determining the constants of a current-meter, and (*f*) explain the advantages thereof.

II.

FOR MINING STUDENTS ONLY.

Mining students will take the following in lieu of 2 and 4.

7. (*a*) Give a brief account of methods by means of which the azimuth of a surface survey may be transferred underground.

(*b*) If a compass must be used, and varying local attractions of the magnetic needle is probable, shew by an example of 3 lines how the best result may be obtained.

(*c*) How are plans of a mining survey prepared?

8. (*a*) Shew how to find the direction and dip of a bore, taking the indications given at two depths as an example.

(*b*) The levels to the same datum are given to three points on a seam; shew by diagram how to find the strike, and dip in any direction.

9. (*a*) Give a brief account of the principles of triangulation; (*b*) shew how to apply the "side-equation" to 4 triangles round a common point; (*c*) calculate the "convergency" of a meridian, west 1 mile from the point of origin, in latitude 30°S, and on a sphere of 4000 miles radius.

MATHEMATICS, PHYSICS, GEOLOGY AND MINERALOGY.

The same papers as those set in the Second Year of Science.

THIRD YEAR EXAMINATION.

CIVIL ENGINEERING IIIA.—MATERIALS AND STRUCTURES.

Only SIX *questions to be attempted.*

1. Write a specification to govern the supply of materials for the following cases:—
   (*a*) Structural steel and rivet steel for bridge work.
   (*b*) Brickwork in cement, also in lime mortar.
   (*c*) Concrete for a reservoir dam, also for filling the cylinders of ordinary bridge piers.
   (*d*) Masonry retaining walls.

2. Explain fully how you would determine the diameter and pitch of the rivets in an ordinary plate-web girder, also the thickness of the web-plate and the spacing of the stiffeners.

3. Make an outline sketch of a Pratt Truss of five panels for a through railway bridge, having given the following data:— Span of trusses 100 feet, depth 30 feet, length of panel 20 feet, dead load assumed to act at each bottom apex 5 tons, live load at each bottom apex 10 tons. Calculate the stresses in the various members of the truss, and write the results on the sketch.

4. A foundation in a building is rectangular in shape, 10 feet by 5 feet, and sustains a pressure of 100 tons; the centre of pressure is 2 feet from one of the short sides, and 8 feet from the other. Calculate the maximum and minimum intensities of pressure (*a*) when merely resting on the foundation, (*b*) when united with cement mortar.

5.

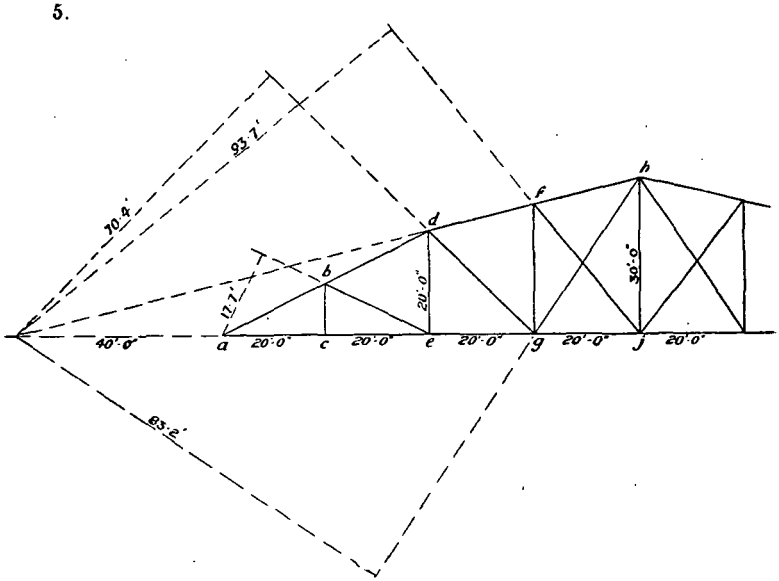

Calculate the greatest tensile and compressive stresses in the bars *ed*, *dg*, *df* and *eg* of the truss shown in Fig. 1, having given the dead and live loads concentrated at each apex *c*, *e*, *g*, *i*, &c. . . . 12 and 24 tons respectively.

6. Make sketches showing how you would design the cross-sections of the four bars in Fig. 1 referred to in the foregoing question, giving the areas and all necessary dimensions.

The following questions are not compulsory, but they will be marked 100 per cent. higher than the foregoing questions.

7. Write down the equations of three moments for uniformly distributed and concentrated loads in continuous girders, and apply them to determine the diagrams of bending moments and shearing stresses in a continuous girder of two spans of 100 and 150 feet respectively, loaded with a uniformly distributed load over the whole girder of 1 ton per foot run, and two concentrated loads of 20 tons at points each 10 feet from the middle pier.

8. Write down Euler's formula for columns—
   (*a*) fixed at one end only, and loaded at the other;
   (*b*) rounded or hinged at each end;
   (*c*) fixed at each end.

   In what respects do actual columns differ from the ideal column dealt with by Euler.

   Write down the equations for determining the safe intensity of working stresses in castiron and in mild steel columns.

   Show how you would design a mild steel column 50 feet long, with pin ends to carry 100 tons.

9. Write a brief essay on reinforced concrete beams, and show how you would determine the moment of resistance in such beams.

10. Make sketches showing a segmental arched ring and abutment of concrete. Assume a load symmetrically distributed in regard to the centre, and determine the true line of resistance, and the stability of the abutment.

CIVIL ENGINEERING—FOR CIVIL AND MINING ENGINEERING.

MATERIALS AND STRUCTURES.

Not more than SEVEN *questions to be attempted.*

1. A bridge has a double triangulation at 45 degrees, and consists of 8 panels. It is loaded with a load of 5 tons at each upper panel point, and 1 ton at each lower panel point. Compute the stresses.

   Assuming the girder referred to in the preceding question to be subject to an additional load of 5 tons on each upper panel point for half the span, compute the stresses.

2. Draw an outline diagram of an ordinary king post roof truss, the depth being $\frac{1}{3}$ the span, and determine the stresses on each part with a load of 5 tons at the ridge, and at the mid point of each rafter.

3. Make an outline sketch of a "hog back" lattice railway bridge, and explain carefully how you would determine the stresses due to the weight of the structure itself, the effect of the train, and the wind pressure; and state what you would consider to be the maximum permissible stresses in tension, compression, and shear in various parts of the structure, the material being mild steel, and the dead and live load being equal.

4. Define strength, stability and stiffness, and illustrate your answer by actual examples.

   What is meant by complete, redundant, and deformable framed structures? Under what circumstances should each be used? A rectangular element of a framed structure consists of four massive bars forming the sides and two light diagonal tension rods, one of which is capable of adjustment. To which of the above classes does this belong? Give reasons for your answer.

   Discuss fully the redundant panels in the cantilevers of the Forth Bridge.

5. What is meant by tearing, shearing, and bearing area in riveted joints, and what is the allowable stress in each case for wrought-iron and steel railway bridge work? Arrange a riveted joint of maximum efficiency for a bar 6 inches wide and $\frac{5}{8}$ inch thick, the rivets being $\frac{7}{8}$ inch diameter and in single shear.

6. Design a group-riveted joint consisting of three steel plates 24 inches wide and $\frac{1}{2}$ inch thick. Give the equations for the various ways in which such a joint may fail, and show all dimensions on your sketches.

7. Show how to design the eye-bars and pins in an American truss bridge, assuming all necessary data.

8. Write an essay on the manufacture and testing of Portland cement.

9. Write a specification (*a*) for the concrete to be used in the building of a reservoir wall, (*b*) for the sandstone masonry to be used in building a bridge pier, (*c*) for the supply of timber for a timber viaduct.

10. A brick obelisk is 8 feet square at bottom, 5 feet square at top, and 60 feet high. Compute the maximum wind pressure it can safely bear, the wind being in the direction of the diagonal. In what manner will such an obelisk fail under excessive wind pressure?

11. Show how to draw a line of resistance through an arched ring, and also how to determine the stability of the abutments, assuming all necessary data.

12. Write an essay on one of the following subjects:—

    (*a*) The calculation of the deflection, and the testing of bridges.

(*b*) The design of long columns.

(*c*) The design of composite bridges, consisting of timber and iron.

(*d*) The design of timber viaducts for roads and railways.

13. Show how to design a rubble masonry dam 60 feet high, having a top width of 10 feet, assuming all necessary data.

MECHANICAL ENGINEERING IIA.

1. A leather belt runs at 2400 feet per minute; find how much its tension is increased by centrifugal action, the weight of leather being taken as 60 lbs. per cubic foot.
2. Determine the stress produced in a perfectly elastic rod when a load W is applied at its end *suddenly*, from rest, *not as a blow*.
3. A load of 1000 lbs. falls through 1 inch before commencing to stretch a suspending rod by which it is carried. If the sectional area of the rod is 2 square inches, length 100 inches, and modulus of elasticity 30,000,000, find the stress produced.
4. If the mean piston speed of a steam engine is 600 feet per minute, the revolutions 100 a minute, the fluctuation of energy 20 per cent. of the work per revolution, the fluctuation of speed $1\frac{1}{2}$ per cent. on either side of the mean, and the diameter of the flywheel equal to twice the stroke, find the weight of flywheel rim in lbs. per indicated horse-power developed.
5. Describe, dwelling especially on the principle of action, any machine with which you are acquainted for cutting the teeth of bevel wheels.
6. Write an essay on the question of the vibration of the masonry foundations, or other supports, of engines and machinery, indicating clearly the conditions that give rise to the greatest trouble in operation.

MECHANICAL ENGINEERING IIB.

1. Find the two vectors a, b, required to make

$$a+b+14_{30}+20_{90}+10_{0}=0.$$

having given that the magnitudes of the two vectors are respectively

20 and 14·9

The subscript figures indicate the angular position of the vectors.

2. A three-legged table touches the ground at points which joined form an equilateral triangle ABC of 2 feet side. A force of 7 lbs. weight acts vertically on the table at a point D, 1·2 feet from A and 1·4 feet from B. Find the pressure at the points of support

3. Five pullies, equally spaced at 2 feet apart, are keyed to a shaft which is supported on bearings 12 feet apart. The pullies are out of balance to the following extent:—

   No. 1, 5 pounds at 1 foot radius,
   No. 2, 6 pounds at 2 feet radius,
   No. 3, 7 pounds at 1 foot radius,
   No. 4, 2 pounds at 2 feet radius,
   No. 5, 6 pounds at 1 foot radius.

   The angles between the several mass radii and the mass radius of No. 1 pulley are respectively 45, 90, 120 and 240 degrees. Find the two masses which will balance the system when placed in No. 2 and 4 pullies at 1 foot radius.

4. Describe, by accurate sketches and diagrams, the methods of ignition and of governing in any type of gas engine with which you are acquainted.

SURVEYING.

All students are required to make observations for latitude and meridian between 13th and 15th December inclusive, and to execute such other work as shall be directed.

1. In a "simple chain" of triangles the length and direction of the initial and of the final lines are determined. Shew, by an example of three triangles, how connections are applied so as to ensure geometrical consistency both as regards angles and side-equation.

2. Shew how to ascertain the convergency of meridians on a spheroidal earth.

3. (*a*) Shew why in general the theodolite does not set out a "straight line" or geodetic between two points. (*b*) What are "parallels of latitude" and "meridians" on an ellipsoid of three unequal axes?

4. (*a*) Give an account of the astronomical operations necessary to determine latitude and meridian. (*b*) How are these affected by the deflection of the plummet-line?

5. State in how many ways longitude may be determined, and give a very brief sketch of the principles of each method.

6. (*a*) Write a brief account of either hydrographic surveying, including tide-determination, or (*b*) the use of the barometer as a surveying instrument.

MINING I.

1. What is understood by secondary enrichment in a lode, and of what service is it to miners?
2. Under what circumstances would you use (*a*) pick machines, (*b*) chain breast machines, (*c*) longwall machines, and why?
3. Describe, with sketch, how you would proceed to win ore from a lode with an underlie of 45 deg., the ore averaging 40 feet in width; neither ore nor walls stand well without support, but there is good local timber and filling material available.
4. What is meant by caisson or drop shafts? How are they used?
5. Explain the following terms:—After damp, backs, balance-bob, going in fork, keps, pitch of ore, safety hook, tail race, tribute, wind-bore.

MINING II.

1. Describe the principle of the Walker fan and shutter. In what respects are they improvements on the Guibal fan? What steps are taken to prevent such fans from being damaged by explosions?
2. How is a mine likely to become flooded; and what precautions may be taken to avoid such a disaster?
3. Explain the endless rope system of haulage, and mention the advantages it has over the main and tail rope system.
4. What parts of a hoisting rope are most likely to show signs of deterioration, and why? How would you examine and test a hoisting rope at a mine, and under what circumstances would you condemn it?
5. How would you proceed to sample and estimate the quantity and value of ore in a portion of a mine that has been cut up into blocks of a suitable size by levels and winzes. The lode varies in width from six inches to five feet, and is made up of bands of comparatively hard and soft materials?

METALLURGY I.

1. What are the advantages resulting from the crushing and washing of coal preparatory to coke making? Describe shortly an efficient coal-washing plant.
2. Compare coke making in beehive and retort ovens. Give your reasons for adopting the one type of oven in preference to the other.
3. Discuss the scope of the cyanide process of gold extraction.
4. Describe a cyanide plant capable of dealing with the sands direct from a battery wet crushing, and producing a hundred tons of sand per twenty-four hours, the sands being under treatment for five days.
5. What are the chemical reactions which occur in the roasting and carbon reduction process of lead smelting?

METALLURGY II.

1. Describe the modern developments in lead blast furnace design and practice.
2. Enumerate the advantages of the forehearth in the blast furnace smelting of copper ores, and describe briefly various kinds of forehearth.
3. Describe the Bessemer process as applied to the production of Blister Copper.
4. Explain the action of Phosphorus, Silicon, Manganese, Aluminium and Sulphur on carbon in cast iron.
5. Discuss the project of the establishment of iron and steel works in New South Wales.

THEORY OF ASSAYING.

1. How would you sample a consignment of (*a*) steel billets, (*b*) pig lead, (*c*) copper ingots, (*d*) copper matte, and (*e*) the sand in a cyanide vat?
2. Describe the method employed when assaying mercury ores containing (*a*) 0·1% to 20%, and (*b*) over 20%. Give the reactions which occur and state the precautions necessary to ensure accurate results.
3. When would you use the dry assay for lead ores? Show what action the fluxes have.

4. Describe and explain the method of assay which you would adopt for copper ores free from Zn, Ni, and Co; give the reasons for your choice.

5. Give the outline of the methods used for determining in a cyanide solution (*a*) the presence of gold, (*b*) its value if poor, (*c*) its assay value if rich, and (*d*) its assay value whether poor or rich. The *outline only* of one method should be given in each case.

6. When estimating manganese by the permanganate titration and standardising by means of iron, explain how you arrive at the conclusion that the iron indicated when multiplied by 0·2946=Mn present.

Mn=55, and Fe=56.

ELECTRICAL ENGINEERING.

NINE *questions may be attempted.*

Neat pencil or ink sketches, in good proportion, should be given wherever possible.

Where the words "dynamo" or "motor" are used, direct current machines are meant.

1. Write down the equations—

(*a*) For finding the number of armature conductors of a dynamo or motor.

(*b*) For finding the ampere turns required on field coils of a dynamo.

(*c*) For preliminary dynamo calculations to get at size of armature.

(*d*) For finding hysteresis loss in a laminated core.

What percentage would you allow for dead turns on dynamo armature?

What leakage coefficient would you suggest for a 20 kilowatt bipolar, and for a 200 kilowatt six-pole dynamo?

2. Draw as accurately as possible the magnetisation curves for—

(*a*) Special cast-steel for poles.

(*b*) Iron for armature stampings.

(*c*) Ordinary cast-iron.

Give average values for the magnetic lines per square centimetre in—

Armature core.
Armature teeth.
Air gap.
Steel magnet pole.
Cast-iron yoke.

Why would you prefer to use cast-iron for the yoke of a traction dynamo?

What do you consider the best way of insulating armature stampings?

Sketch two forms of armature slots for four rectangular conductors.

3. Make a diagrammatic sketch explaining the effect of armature reaction in a dynamo, indicating the direction of currents in armature and field coils, the direction of the magnetic lines of force, etc. In the sketch make the north pole on the right, and direction of rotation clockwise.

Sketch any two methods of arranging poles which have the effect of reducing armature reaction.

Why do carbon brushes reduce sparking on a commutator?

4. A six-pole dynamo having a parallel wound armature runs at 420 revolutions per minute. The armature core is built up of 700 stampings, each 0·3 of a millimetre in thickness, and having a radial depth of 9 centimetres. The armature conductors are 600 in number, and of a cross section sufficient to carry 60 amperes. The magnetic circuit is such that the line density in the armature core is 14,000 C.G.S. lines per square centimetre.

(*a*) Find the E.M.F. and total output in kilowatts given by the machine.

(*b*) In case the armature has a series winding, what would be the E.M.F. and current given by the machine?

(*c*) What would be the probable full load efficiency, also the percentage loss, in shunt winding?

5. A 12 B.H.P. motor having a back E.M.F. of 95 volts, and a resistance of ·03 ohm, is connected to a dynamo having a resistance of ·026 ohm by means of cables having a resistance of ·004 ohm. Assuming 500 watts are lost in the motor, what must be the E.M F. of the dynamo?

Show that the torque of a motor depends on the strength of the magnetic field, the number of conductors in series on the armature, and on the current, but has nothing to do with the speed.

6. Make well-proportioned sketches of two forms of alternate current transformers showing method of arranging stampings and coils. Give reasons for preferring any particular construction.

How would you propose to convert two-phase alternating current to three-phase? Where is this done, and why?

At the time of visit to Randwick Sub-station it was noticed that the air coming from one part of the transformer was hotter than that from another part. What is your explanation of this?

7. How would you estimate the minimum insulation resistance of an electric installation—

(*a*) By the Fire Underwriters' rules?

(*b*) By the rule of the Sydney City Council?

Give your reasons for your preference of one or other of the rules.

An electric installation consists of a 9 B.H.P. motor; a 2 B.H.P. motor; two enclosed 6 ampere arc lamps in series; 16-32 c.p., 38-16 c.p. and 12-8 c.p. incandescent lamps. What would be the tests required in megohms by the Fire Underwriters' rules, and by the rule of the Sydney City Council?

Describe briefly the principle of the Evershed ohmmeter and generator.

8. Describe and illustrate how you would make the joints of a 7/16 and a 19/16 cable. Indicate lay of the wires, and mention any precautions you would take to keep section of joint as near as possible symmetrical with section of cable. How would you insulate such a joint, assuming the cable is of the 600 megohm class, and the working pressure is 480 volts?

What do you understand by the "looping in" system?

What is the smallest conductor it is advisable to use in an installation?

9. Referring to the Sydney Tramways—
   (*a*) Explain the significance of the label, marked "cut off" which is hung at intervals from the overhead equipment.
   (*b*) The cars on the King Street line are brought to rest very suddenly, and then the hand-brake is screwed down. Explain this.
   (*c*) Car motors are being altered at the Randwick shops for oil lubrication. Describe this. What kind of oil is used, and what is the improvement over the original method of grease lubrication?
   (*d*) Describe the construction of the trolly wheels used on the Sydney cars.

10. Describe how you would set about the charging of an accumulator battery, and what precautions would you take as to the type of machine used for charging? What would you expect the voltage and specific gravity of each cell to be at beginning and at end of the charge?

    In one of the Sydney electric supply stations compound wound dynamos are run in parallel with the cells. What precautions have to be taken to make the arrangement workable, and what are the advantages of it?

11. Describe any three of the following—
    (*a*) Energy meter.
    (*b*) Maximum demand meter.
    (*c*) Arc lamp.
    (*d*) Nernst lamp.
    (*e*) Lightning arrester for a tramway circuit.

12. Give two methods of obtaining wide variation in speed of an electric motor.

    Sketch the construction of any motor starting switch you are familiar with. Why are such switches always fitted with a no-load release?

    Suppose you wish to obtain temporarily a little higher speed from a motor, how could you do it?

DIFFERENTIAL EQUATIONS.

TWO HOURS AND A HALF.

1. What is a differential equation, the complete solution, a singular solution of such an equation?

Write down the equation of a circle which touches at the origin the straight line $y=x$; and thence find the differential equation of all such circles.

2. Describe the methods usually adopted for solving equations of the first order and degree which are

(i.) homogeneous in x and y,

(ii.) linear.

Give an example of each of these types of equation, and integrate it.

3. Solve the equations

(i.) $\frac{dy}{dx}+x=\tan^2 x.$

(ii.) $(x-y)^2\frac{dy}{dx}=a^2.$

(iii.) $y^2-2ay+a^2=x^2p^2.$

(iv.) $x^2(y-px)=yp^2.$

4. Define the terms complementary function, particular integral, complete integral.

Discuss the case in the solution of the linear equation with constant coefficients in which the auxiliary equation has a pair of imaginary roots $a+b\sqrt{-1}$ and $a-b\sqrt{-1}$.

Also shew how to find the particular integral when the term without y is of the form $\epsilon^{ax}\phi(x)$, $\phi(x)$ being a rational integral algebraic function of x.

Illustrate your answers by solving the equations

$$\frac{d^3y}{dx^3}+\frac{d^2y}{dx^2}+\frac{dy}{dx}+y=0.$$

$$\frac{d^3y}{dx^3}+\frac{d^2y}{dx^2}+\frac{dy}{dx}+y=x\epsilon^{ax}.$$

5. Solve the equations

$$x^2\frac{d^2y}{dx^2}+5x\frac{dy}{dx}+4y=x^3.$$

$$(1+x)^2\frac{d^2y}{dx^2}+3(1+x)\frac{dy}{dx}+4y=x.$$

$$v\frac{dv}{dx}=g-kv^2.$$

6. Solve the simultaneous equations

$$\left.\begin{aligned}\frac{dx}{dt}+2x+y&=\epsilon^t\\ \frac{dy}{dt}-3x+y&=t\end{aligned}\right\}$$

7. If the two plates of a condenser, of capacity C, are connected by a wire of resistance R (and zero self-induction), the equation connecting the charge q with the electro-motive force E is

$$E=R\frac{dq}{dt}+\frac{q}{C}$$

Integrate this in the cases

$$E=0, \quad E=A\cos(ft+\alpha).$$

FOURTH YEAR EXAMINATION.

MECHANICAL ENGINEERING III.

Thorough answers to a few questions are required. Not more than FIVE *questions should be attempted.*

1. Discuss, in the form of a brief essay, the general question of *The Storage of Energy.* Let your statement be as much to the point and as precise as possible.

2. (*a*) Give a few illustrations of the use of the term "Load Factor," and explain how the cost of working per unit of energy distributed (say from a hydraulic power station) is affected by the load factor.

(*b*) A supply of power in one unit equivalent to about 50 h.p. is required in a small factory near the Technical College, Sydney, and the following sources of supply are available:—

(i.) Electric motor connected to the Municipal Electric Power mains.

(ii.) Hydraulic motor connected to the Sydney Hydraulic Power Co. supply.

(iii.) Hydraulic motor connected to the city water mains.

(iv.) A gas engine using the Gas Co. supply.

(v.) A gas engine using gas made in a Suction Gas Producer using coke.

(vi.) Steam engine and boiler burning coal.

Assume approximate prices as now current in Sydney, and other necessary particulars, and determine how many of these sources are worth detailed investigation, and explain the considerations that would influence you in making a final selection in each of the following cases:—

(i.) If the power in the factory is required for only 4 or 5 hours a day, and with many starts and stops.

(ii.) If the power is required continuously 16 hours a day throughout the year.

3. (*a*) Describe, with neat sketches, a modern installation for the production, distribution, and utilization of power by compressed air. Explain the function of each part of the plant, and give approximate figures for the loss of efficiency from stage to stage of the entire process.

(*b*) "If air enters an air main at 60 lbs. per square inch gauge pressure and reaches the other end at 55 lbs. gauge pressure, there being a fall of pressure of 5 lbs. due to friction, then it is commonly stated that $\frac{5}{60}$ of the energy of the air is wasted. But this is altogether erroneous, the statement being based on a false hydraulic analogy" (*Unwin*). Explain and discuss this statement.

4. Describe, with the aid of neat diagrams approximately to scale, the various types of large modern gas engine other than those operating on the one-cylinder simple Otto cycle. Compare the advantages of the various types.

5. Discuss in detail the advantages and disadvantages of steam turbines as compared with reciprocating engines—

(*a*) From the point of view of economy of steam consumption.

(*b*) From the point of view of adaptability for marine work.

Illustrate diagrammatically the arrangement of the turbines in a modern steamship with three propellers, and also the steam connections between the boilers, the various turbines, and the condensers.

Explain in particular the method of manœuvring the vessel in port and of going astern.

6. Discuss as fully as possible that part of Callendar and Nicholson's researches on cylinder condensation which bears on "partial" and "limiting" condensation, pointing out how the law which limits the rate of condensation of steam on a metal surface was inferred from their observations on the behaviour of steam in an engine cylinder. Does cylinder condensation account for all the missing steam? If not, state precisely how the difference is accounted for.

Or,

In a gas engine diagram the expansion curve usually lies above the adiabatic expansion curve, showing that if the working substance be a perfect gas it must be receiving heat during the expansion, yet in fact much heat is with-

drawn from the cylinder walls by the cooling water. What do you regard as the most probable explanation of this?

7. A small steam-driven ammonia refrigerating plant of $1\frac{1}{2}$ tons nominal ice capacity consists of a cooling chamber 7 feet by 6 feet by 9 feet and a small ice tank fitted with cans. The plant is to be so arranged that either the ice tank or the cooling chamber can be used separately if required. Make a neat diagram showing the arrangement of the plant and the piping complete, giving the approximate dimensions of the compressor, and the sizes of piping, and indicate the positions of all valves, drains, oil traps, connections and gauges.

   Explain how the plant is charged with ammonia.

   Write a detailed specification for the construction of the cooling chamber.

8. Describe, dwelling especially on the principle of action, any recent machines with which you are acquainted for accurately cutting the teeth of bevel wheels.

ELECTRICAL ENGINEERING.

PAPER I.

EIGHT *questions may be attempted.*

Neat pencil or ink sketches, in good proportion, should be given wherever possible.

1. Compare the new types of lamps such as the Nernst, the Tantalum, the Mercury Vapour, and the Flame arc, with the ordinary carbon filament incandescent lamp, and the open type arc lamp.

   What distance apart do you recommend for arc lamps for street lighting, also what height to globe?

   What do you understand by mean hemispherical candle-power?

   Which is the more economical of two 16 candlepower lamps?

   (A) Taking $3\frac{1}{3}$ watts per candlepower, and having a life of 500 hours; *or*

   (B) taking $3\frac{3}{4}$ watts per candle, and a life of 900 hours.

   Electricity costs 6d. a Board of Trade unit, and renewals are 12d. in case A and 9d. in case B.

2. Discuss the various methods of suppressing arcs in alternating and direct current switchgear. Why is an oil break generally used for one, and a carbon contact break for the other?

   Describe and illustrate a switch fuse suitable for 3000 volts alternating current.

   Give diagram, and explain working of a shunt break switch for a field magnet circuit.

   Describe a method of synchronising two alternators by means of lamps.

3. Describe and illustrate the action of three of the following Lightning Arresters—

   Siemen's horn break.
   Garton-Daniel arrester.
   Wurtz non-arcing metal arrester.
   Water jet arrester.

   What is the action of the heavy copper coils in tramway feeder pillars?

   Explain why the arc travels along the horns of a Siemen's horn arrester, even when the latter is in a horizontal position. Why is this type not suitable for a high tension alternating current switch?

4. Describe how you would make a breakdown test of a joint on a 19/16, 600 megohm cable, giving diagram of connections and naming instruments employed.

   If the working pressure is 480 volts, what alternating voltage would you expect such a joint to withstand?

   A cable having an insulation resistance of 600 megohms per mile is used for a circuit 1000 yards long. There are 50 joints in the circuit each 5000 megohms resistance, and 300 fittings each of 300 megohms. What is the total resistance of the circuit?

5. What is a Reversible Booster? Give diagram of connections, showing how it works on a heavy fluctuating load. What particulars in the design of such a Booster require special attention to ensure satisfactory working?

   In modern Electric Power Stations the Accumulator Room is usually some distance away from the Switchboard, whereas the practice was formerly to have the two as close together as possible. Explain this, and state the advantages.

6. Discuss the methods of driving Printing Presses by the motor generator, and the two motor or other methods.

   Give a rule for the proportions of rawhide pinions, and say what you consider would be a well-proportioned pinion for a 35 h.-p. motor, running at 600 revolutions per minute.

   State briefly the advantages of electric driving for a general machine shop, having say 200 horse-power on its existing line shafting. Consider the question in relation to—

   (*a*) Overtime work.

   (*b*) The use of portable tools.

   (*c*) The utilisation of the high speed characteristics of the electric motor.

7. Describe and sketch some good modern form of alternator, showing in detail, method of fixing solid and laminated poles.

   State your views on the question of rigid armature construction for fly-wheel alternators.

   Why have alternators without iron in the armature, and with single coil fields, been superseded?

   What are amortisseur coils?

   What would be the E.M.F. and periodicity of a 12 pole alternator running at 500 revolutions, and having 12 coils each with 42 turns in series. The magnetic flux from each pole is 2,000,000 lines.

8. A 20 K.W. alternating current transformer has an efficiency of 97·8 % at full load, and 97·6 % at half load. Find what will be the efficiencies at three-quarter load and one-tenth load.

   In adjudicating on tenders for transforming apparatus it is usual to take particular account of the efficiencies, especially on the low loads. Explain this.

   Why has the house-to-house system of supply, in which each customer had a transformer, gone out of use?

   Three-phase transmission of power systems usually have the transformers arranged in delta. Why is this?

9. An alternating current supply at 6000 volts, 25 periods per second, has to be transformed to 570 direct current; compare the various types of sub-station machinery, viz. :—

(*a*) Induction motor-generators.

(*b*) Synchronous motor-generators.

(*c*) Rotary converters with transformers.

Mention the various ways of starting up the above machinery.

Synchronous motor-generators are sometimes over excited. Why is this?

10. Describe fully how you would test a small three-phase induction motor for efficiency, &c. Give particulars of instruments required, and sketch of connections. What would be the effect on the running of the motor by—

(*a*) Change of frequency.

(*b*) Change of rotor resistance.

(*c*) Change of applied E.M.F.

(*d*) Breaking one phase of supply.

Calculate the speed of a three-phase motor connected to a circuit having a periodicity of 50 cycles per second. The stator has 12 poles, and the slip is $3\frac{1}{2}$ per cent.

What slip would you expect a 10 and a 100 B.H.P. two-phase motor to have?

11. Find the hysteresis loss in a laminated armature 30 cm. outside and 20 cm. inside diameter, by 29 cm. overall length. The speed is 1200 revolutions per minute, and 3,500,000 C.G.S. lines pass from one pole of the dynamo to the other. The iron used gives the following values—

C.G.S. lines per sq. cm.	Loss in Ergs per cub. cm. per cycle.
13,000	7,200
15,000	9,300
17,000	11,500

ELECTRICAL ENGINEERING.

PAPER II.

SEVEN *questions may be attempted.*

Neat pencil or ink sketches, in good proportion, should be given wherever possible.

1. Make sketches showing contour of a probable winter and summer load for an Electric Supply Station for a town of, say, 50,000 to 100,000 people.

How is the "load factor" arrived at, and what would you expect it to be for—

(*a*) A city such as Sydney,

(*b*) A manufacturing town of 50,000 to 100,000 people,

(*c*) A seaside holiday resort.

2. Discuss the relative advantages and disadvantages of generating sets for a traction station in which the prime movers are—

(*a*) Slow running horizontal steam engines,

(*b*) Quick speed vertical steam engines,

(*c*) Steam turbines with horizontal or vertical spindles,

(*d*) Gas engines driven by producer gas.

What do you consider will be the tendency in the future?

3. In electric power station accounts, what items constitute "works costs," and what other items have to be added to arrive at the "total costs" per Board of Trade unit sold?

What are fair depreciation percentages for buildings, boilers, engines, dynamo machinery, accumulators, cables. If the interest rate is 5 per cent., and the plant has to be renewed at end of 20 years, what per cent. of original outlay must be reserved annually to provide for renewal?

In order to compare the results of various electric supply undertakings, how is the mixed load of incandescent and arc lighting, motors, etc., dealt with? What percentage of the total lamp connection would you assume as being alight at any one time?

4. The average pressure generated in a central station is 430 volts, and the system is a three-wire with 200 volt lamps, of which there are 10,000 in use, each of 8 candle-power. The dynamos have an average efficiency of conversion of 90 per cent.. Full load is on for two hours, $\frac{1}{2}$ load for eight hours, $\frac{1}{10}$ load for six hours. One mechanical brake H.P. costs $1\frac{3}{4}$d. per hour for wages, coal, oil, etc., at full load; $2\frac{1}{2}$d. at $\frac{1}{2}$ load, and 6d. at $\frac{1}{10}$ load. On no load the cost of running is 15s. per hour.

What should be the price charged per Board of Trade unit in order that there may be a profit of 10 per cent.?

5. Make a sketch of the connections at the various notches of a series-parallel tramcar controller.

Describe the ordinary magnetic blow-out, and the solenoid blow-out as used on such controllers. Do you consider a blow-out absolutely necessary?

Give brief description of the Newall electric brake.

6. A loaded electric tramcar weighs 13 tons, and on an incline of 1 in 100 takes 15 seconds to attain 7 miles an hour. Assuming the standard trolley wire voltage, and fair figures for the resistance of traction, and efficiency of gearing, find—

(*a*) The horse-power of the motors.

(*b*) The current passing into the motors.

(*c*) Pull per ampere.

7. Discuss the methods of collecting current from a trolley wire by the Siemen's bow or roller, and by the ordinary trolley wheel. Which would be the most suitable for extra high speed work?

Sketch two methods of motor suspension for a tramcar motor.

Discuss the advantages and disadvantages of the maximum traction truck. How are the pony wheels prevented from mounting the rails when going round curves?

Describe three forms of joining rails so as to give a continuous circuit.

Sketch the form of bond you would prefer for a suburban track where the rails are merely laid on sleepers.

8. What is the Board of Trade regulation as to drop of voltage in return rails?

Suppose current leaks into a metal pipe, where would you look for the effects of electrolysis?

What do you understand by a negative booster? Show the connections of such a booster on a tramway circuit.

9. Sketch out an arrangement of trolley wires, suspension wires, poles, insulators, etc., for a junction of two double track tramlines, the angle at the junction being about 45 degrees.

Name each of the various pieces of apparatus used, and give probable sizes of wires and poles.

Make a detailed sketch of a section insulator and a frog, and indicate the position of same.

10. Discuss generally the question of electric traction for railway working by—

(*a*) Continuous current third rail.

(*b*) Three-phase alternating current.

(*c*) Single-phase alternating current.

Mention names of typical railways working on each system.

In connection with the three-phase system of working, how is the problem affected by regeneration or recuperation of energy; also, the constant speed characteristics of the motors?

*EXAMINATION PAPERS

MARCH, 1906.

FACULTY OF ARTS.

FIRST YEAR EXAMINATION.

LATIN PROSE COMPOSITION AND UNSEEN TRANSLATION.

HONOURS.

1. Translate into Latin—

It cannot be maintained that one or two Powers, or even a coalition, would be justified in assuming the control of a nation's destinies for no better reason than that the nation in question was weak, whilst its possessions were coveted by its neighbours. But if, up to a certain point, the complete independence of a people within its own territories must be acknowledged, and if every people may justly claim to be "master in its own house," this cannot preclude the right of a community of nations to intervene in the affairs of any one member of the community, when either this member is disturbing the general peace, or its Government has become clearly and indisputably impotent. It is no doubt fairly open to question how far the collective authority of a community like Europe ought to be systematised, or whether we should be doing wisely to set up an international court, extending its jurisdiction over nations. But the rights of the majority must necessarily be paramount.

2. Translate into English—

(*a*) Sedibus exsiluere Patres invisaque belli
Consulibus fugiens mandat decreta senatus.
Tunc quae tuta petant et quae metuenda relinquant
Incerti, quo quemque fugae tulit impetus urgent
Praecipitem populum serieque haerentia longa

* The time allowed for each paper is three hours, except where otherwise stated.

Agmina prorumpunt. Credas aut tecta nefandas
Corripuisse faces aut iam quatiente ruina
Nutantes pendere domos: sic turba per urbem
Praecipiti lymphata gradu, velut unica rebus
Spes foret adflictis patrios excedere muros,
Inconsulta ruit. Qualis cum turbidus Auster
Reppulit a Libycis immensum Syrtibus aequor
Fractaque veliferi sonuerunt pondera mali
Desilit in fluctus deserta puppe magister
Navitaque et nondum sparsa compage carinae
Naufragium sibi quisque facit: sic urbe relicta
In bellum fugitur. Nullum iam languidus aevo
Evaluit revocare parens coniunxve maritum
Fletibus aut patrii dubiae dum vota salutis
Conciperent tenuere Lares.

(*b*) Nec tuae naturae est translaticia haec et quasi publica officia a familiaribus amicis contra ipsorum commodum exigere, et ego te constantius amo, quam ut verear ne aliter ac velim accipias, nisi te kalendis statim consulem videro, praesertim cum me necessitas locandorum praediorum plures annos ordinatura detineat, in qua mihi nova consilia sumenda sunt. Nam priore lustro, quamquam post magnas remissiones, reliqua creverunt: inde plerisque nulla iam cura minuendi aeris alieni, quod desperant posse persolvi: rapiunt etiam consumuntque quod natum est, ut qui iam putent se non sibi parcere. Occurrendum ergo augescentibus vitiis et medendum est. Medendi una ratio, si non nummo, sed partibus, locem ac deinde ex meis aliquos operis exactores custodes fructibus ponam. Et alioqui nullum iustius genus reditus, quam quod terra caelum annus refert. At hoc magnam fidem, acres oculos, numerosas manus poscit. Experiendum tamen et quasi in veteri morbo quaelibet mutationis auxilia temptanda sunt. Vides quam non delicata me causa obire primum consulatus tui diem non sinat; quem tamen hic quoque ut praesens votis gaudio gratulatione celebrabo.

LATIN AUTHORS.

HONOURS.

1 and 2. Translate and comment on extracts from Cicero, de Oratore, Book I.; and Virgil, Æneid, Books III. to VI.

3. Translate and comment on—

(*a*) Nec minus Andromache digressu maesta supremo
Fert picturatas auri subtemine vestes
Et Phrygiam Ascanio chlamydem, nec cedit honori.

(*b*) Nec me adeo fallit, veritam te moenia nostra
Suspectas habuisse domos Carthaginis altae.
Sed quis erit modus? aut quo nunc certamine tanto?

(*c*) Ter centum tonat ore deos, Erebumque Chaosque
Tergeminamque Hecaten, tria virginis ora Dianae.

(*d*) Hic vir, hic est, tibi quem promitti saepius audis,
Augustus Cæsar, Divi genus, aurea condet
Saecula qui rursus Latio.

4. Scan the following lines, with any comments you think called for:—

(*a*) Dona dehinc auro gravia sectoque elephanto.

(*b*) Cum socüs gnatoque Penatibus et magnis dis.

(*c*) Stant et iuniperi et castaneae hirsutae.

(*d*) Insulae Ionio in magno quas dira Celaeno.

ROMAN HISTORY.

HONOURS.

Not more than SIX *questions to be answered.*

1. What evidence is there of the presence of non-Latin elements in the population of early Rome?

2. "Patres ab honore, patriciique eorum progenies appellati." (*Livy.*) Criticise this statement, and give a more probable account of the origin and meaning of the patriciate.

3. "The plebeians must not be confused with the clients." (*Taylor.*) Explain carefully the distinction between the two classes in point of origin and status.

4. "Scita plebei appellantur ea quae Plebs suo suffragio sine Patribus iussit, Plebeio magistratu rogante." (*Festus.*) Briefly distinguish the various constitutional Assemblies in Rome, and give the evidence for the existence of two Tribe assemblies.

5. What exactly was the Publicus Ager? Distinguish the various methods of dealing with it, and show its importance in your period.

6. Give a brief history of the Latin League in its relations with Rome.
7. Show the effect of the Punic wars upon (1) the position of the Senate, and (2) upon Italian agriculture.
8. "The Tribunate was not an office instituted to remove political inequalities, nor a far-sighted plan for the establishment of a Democracy; it was . . an institution created to meet the special need of the times." Comment on this, tracing, as clearly as the nature of the case allows, the gradual growth of the Tribunician power.

GREEK PROSE COMPOSITION.

HONOURS.

The assertion of the oligarchs, that the Athenian democracy had proved a failure, was to a certain extent borne out by the facts. After all, the disaster in Sicily had happened because the expedition had been undertaken without sufficient reflection—at all events, this view could be maintained. Steps should therefore be taken to ensure more careful previous consideration in the future. The preliminary deliberation in the Council was evidently inadequate; hence, after the defeat in Sicily a body of older men was appointed, ten in number. But in the opinion of many this was only a feeble attempt at reform. Many people held that the State would be better governed if the Assembly were differently organised. The only question was to discover the proper form of organisation.

XENOPHON AND GREEK HISTORY.

(*The Greek passages need not be translated. Not more than* SIX *question are to be attempted.*)

1. "The characteristic feature of the period 404—362 B.C., is the abortive attempt of Sparta to gain an imperial position." To what causes do you ascribe the failure of Sparta in her attempt?
2. Ὁ μέντοι Τιθραύστης, καταμαθεῖν δοκῶν τὸν Ἀγησίλαον καταφρονοῦντα τῶν βασιλέως πραγμάτων καὶ οὐδαμῇ διανοουμένον ἀπιέναι ἐκ τῆς Ἀσίας, ἀλλὰ μᾶλλον ἐλπίδας ἔχοντα μεγάλας αἱρήσειν βασιλέα, ἀπορῶν τί χρῷτο τοῖς πράγμασι, πέμπει Τιμοκράτην τὸν Ῥόδιον εἰς Ἑλλάδα.

   Criticise this.

3. What theory is possible as to the interdependence of the operations of Konon at sea and of the confederate Greek states by land?

4. Give an estimate of the character of Agesilaus as a statesman and soldier.

5. What chronological data do we possess of the period covered by the Corinthian War?

6. Explain the strategic idea of the confederates in the Corinthian War.

7. *ἐν τούτῳ οἱ Λακεδαιμόνιοι καὶ δὴ Τεγεάτας παρειληφότες καὶ Μαντινέας ἐξῆεσαν τὴν ἀμφίαλον.*

Explain the movements of both sides preliminary to the battle of Corinth.

8. What evidence is furnished within your period of the growth of the idea of Federation?

9. How does your period illustrate the importance of sea-power?

10. Describe the battle of Koroneia, exhibiting clearly the points of interest and importance.

11. *ὁ δὲ Κόνων ἀφικόμενος πολὺ τοῦ τείχους ὤρθωσε, τά τε αὐτοῦ πληρώματα παρέχων καὶ τέκτοσι καὶ λιθολόγοις μισθὸν διδούς.*

Also,

ἐπὶ Διοφάντου ἄρχοντος, Σκιροφορίωνος μηνὸς, ἐς τὰ κατ' ἡμέραν ἔργα . . . μισθός.

What do you know of the rebuilding of the walls of Athens?

12. What were the terms of the Peace of Antalkidas? Show clearly how it affected Thebes, Athens, and Sparta respectively.

13. *συμμάχους δὲ ποιεῖσθαι Χίους ἐπ' ἐλευθερίᾳ καὶ αὐτονομίᾳ μὴ παραβαίνοντας τῶν ἐν ταῖς στήλαις γεγραμμένων περὶ τῆς εἰρήνης.*

Comment on the above extract from an Athenian treaty with Chios (386 B.C.).

14. What were the chief provisions in the constitution of the Second Athenian Confederacy?

15. Sketch the rise and growth of united Arkadia, explaining clearly its relations with Thebes.

16. Examine the question at issue between Sparta and Thebes at the signing of the Peace of Kallias.

17. Describe the movements preliminary to the battle of Mantineia.

JUNIOR FRENCH I.

COMPOSITION, UNSEEN TRANSLATION AND HISTORICAL GRAMMAR.

HONOURS.

1. Translate into French—

My hold of the colonies is in the close affection which grows from common names, from kindred blood, from similar privileges and equal protection. These are ties, which, though light as air, yet are as strong as links of iron. Let the colonies always keep the idea of their civil rights associated with your government,—they will cling and grapple to you; and no force under heaven will be of power to tear them from their allegiance. But let it be once understood that your government may be one thing and their privileges another; that these two things may exist without any mutual relation;—the cement is gone, the cohesion is loosened; and everything hastens to decay and dissolution. As long as you have the wisdom to keep the sovereign authority of this country as the sanctuary of liberty, wherever that chosen race—the sons of England—worship freedom, they will turn their faces towards you. The more they multiply, the more friends you will have; the more ardently they love liberty, the more perfect will be their obedience. Slavery they can have anywhere: it is a weed that grows in every soil. But, until you become lost to all feeling of your true interest and your natural dignity, freedom they can have from none but you. This is the commodity of price, of which you have the monopoly. This is the true act of navigation which binds to you the commerce of the colonies, and, through them, secures to you the wealth of the world. It is the spirit of the English constitution, which, infused through the mighty mass, pervades, feeds, unites, invigorates, vivifies every part of the Empire, even down to the minutest member.

2. Translate (at sight)—

(*a*) Quant à moi, j'ai là-dessus une petite manière qui l'enchante; c'est que je la loue brusquement, du ton dont on querelle; je boude en la louant, comme si je la grondais d'être louable: et voilà surtout l'espèce d'éloges qu'elle aime, parce qu'ils n'ont pas l'air d'être flatteurs, et que sa vanité hypocrite peut la savourer sans indécence. C'est moi qui l'ajuste et qui la coiffe. Dans les premiers jours je tâchai de faire de mon mieux, je déployai tout mon savoir-faire. Eh! mais, Lisette, finis donc, me disait-elle, tu y regardes de trop près; tes scrupules m'ennuient. Moi, j'eus la bêtise de la prendre au mot, et je n'y fis plus tant de façons; je l'expédiais un peu aux dépens des grâces. Oh! ce n'était pas là son compte: aussi me brusquait-elle; je la trouvais aigre, acariâtre. Que vous êtes gauche! laissez-moi; vous ne savez ce que vous faites. Ouais, dis-je, d'où cela vient-il? je le devinai: c'est que c'était une coquette qui voulait l'être sans que je le susse, et qui prétendait que je le fusse pour elle; son intention, ne vous déplaise, était que je fisse violence à la profonde indifférence qu'elle affectait là-dessus. Il fallait que je servisse sa coquetterie sans la connaître; que je prisse cette coquetterie sur mon compte, et que madame eût tout le bénéfice des friponneries de mon art, sans qu'il y eût de sa faute.

(*b*) Après avoir ramené son bonnet d'une légère tape, essoufflée, la Teuse revint donner un coup de balai devant l'autel. La poussière s'obstinait là, chaque jour, entre les planches mal jointes de l'estrade. Le balai fouillait les coins avec un grondement irrité. Elle enleva ensuite le tapis de la table et se fâcha, en constatant que les grande nappe supérieure, déjà reprisée en vingt endroits, avait un nouveau trou d'usure au beau milieu; on apercevait la seconde nappe, pliée en deux, si émincée, si claire elle-même, qu'elle laissait voir la pierre consacrée, encadrée dans l'autel de bois peint. Elle épousseta ces linges roussis par l'usage, promena vigoureusement le plumeau le long du gradin contre lequel elle releva les cartons liturgiques. Puis, montant sur une chaise, elle débarrassa la croix et deux des chandeliers de leurs housses de cotonnade jaune. Le cuivre était piqué de taches ternes.

3. Historical Grammar—

(*a*) What were the phonetic characteristics of Popular Latin as contrasted with the classical language?

(*b*) Trace the history of the nasal vowels.

(*c*) Summarise in the form of rules the influence of the Palatals upon the development of the accented vowels. Give examples.

(*d*) Discuss from a historical point of view the common distinction between regular and irregular verbs.

(*e*) Write down, indicating the quality of the vowels and the position of the tonic accent, the Popular Latin originals of the words *oui*, *ailleurs*, *dont*, *même*, *il*, *le*. Explain all changes in form by quoting appropriate rules.

JUNIOR FRENCH II.—AUTHORS.

HONOURS.

1. Translate into English, extracts from Pages choisies de Saint-Simon.
2. Comment on Saint-Simon's characteristics as an author.
3. Translate and comment on extracts from Hugo, Ruy Blas.
4. Discuss the merits of *Ruy Blas* as a machine for the stage.

JUNIOR GERMAN I.

COMPOSITION, UNSEEN TRANSLATION AND HISTORICAL GRAMMAR.

HONOURS.

1. Translate into German—

To see a young officer of eighteen years of age come into company in full uniform, and with such a wig as is worn by grave and respectable clergymen advanced in years, would make everybody laugh; because it certainly is a very unusual combination of objects, and such as would not atone for its novelty by any particular purpose of utility to which it was subservient. It is a complete instance of incongruity. Add ten years to the age of this incongruous officer, the incongruity would be very faintly diminished;—make him eighty years of age and a celebrated military character of the last reign, and the

incongruity almost entirely vanishes: I am not sure that we should not be rather more disposed to respect the peculiarity than to laugh at it. As you increase the incongruity, you increase the humour; as you diminish it, you diminish the humour. If a tradesman of a corpulent and respectable appearance, with habiliments somewhat ostentatious, were to slide down gently into the mud, and dedecorate a pea-green coat, I am afraid we should all have the barbarity to laugh. If his hat and wig, like treacherous servants, were to desert their falling master, it certainly would not diminish our propensity to laugh; but if he were to fall into a violent passion, and abuse everybody about him, nobody could possibly resist the incongruity of a pea-green tradesman, very respectable, sitting in the mud, and threatening all the passers-by with the effects of his wrath. Here, every incident heightens the humour of the scene—the gaiety of his dress, the general respectability of his appearance, the rills of muddy water which trickle down his cheeks, and the harmless violence of his rage. But if, instead of this, we were to observe a dustman falling into the mud, it would hardly attract any attention, because the opposition of ideas is so trifling and the incongruity so slight.

2. Translate (at sight)—

Doch das hatte diesmal eben keine Gefahr. Der ernste Wahlsenat hatte Wladomir's Parabel die Nacht über so sorgfältig wiederkäut und verdaut, daß sie in Geist und Herz übergegangen war. Ein flinker Ritter, der diese günstige Krisis witterte und in Ansehung der Herzensangelegenheiten mit dem zärtlichen Wladomir sympathisirte, strebte, diesem die Ehre, das Fräulein auf den böhmischen Thron zu setzen, entweder zu entreißen oder doch mit ihm zu theilen. Er trat auf, zückte das Schwert, rief mit lauter Stimme Fräulein Libussa zur Herzogin von Böhmen aus und gebot, wer es also meine, solle gleich ihm das Schwert zücken, die Wahl zu vertheidigen. Alsbald blinkten viele hundert blanke Schwerter auf dem Wahlfelde; ein lautes Freudengeschrei kundigte die neue Regentin an, und allenthalben ertönte der freudige Volksruf: „Libussa sei unsere Herzogin!" Man ordnete einen Ausschuß ab, an dessen Spitze Fürst Wladomir und der Schwertzieher sich befanden, dem Fräulein die Erhebung zur Fürstenwürde kundzuthun. Sie nahm mit dem bescheidenen

Erröthen, welches den weiblichen Reizen den höchsten Ausdruck von Grazie mittheilt, die Herrschaft über das Volk an, und der Zauber ihres wonniglichen Anblicks machte jedes Herz ihr unterthan. Das Volk huldigte ihr mit großem Frohlocken, und obgleich die beiden Schwestern sie neideten und ihre geheimen Künste anwendeten, sich an ihr und dem Vaterlande der vermeinten Verschmähung halber zu rächen, durch den Sauerteig der Verunglimpfung und des Tadels aller Handlungen und Thaten ihrer Schwester unter der Nation eine schädliche Gärung zu bewirken und die Ruhe und Glückseligkeit der sanften jungfräulichen Regierung zu untergraben: so wußte Libussa doch diesem unschwesterlichen Beginnen weislich zu begegnen und alle feindseligen Anschläge und Zaubereien dieser Unholdinnen zu vernichten, bis sie müde wurden, ihre unwirksamen Kräfte weiter an ihr zu versuchen.

3. Historical Grammar—
   (*a*) Describe and illustrate the Second Sound-shifting.
   (*b*) Mention the more important phonetic differences between New High German and Middle High German.
   (*c*) Write down the present indicative of *schlagen* in OHG, MHG and NHG, and account for any changes.
   (*d*) At what periods and with what results has the German language been influenced by French?
   (*e*) Explain historically the words *Habsburg*, *Sachsen*, *Detmold*, *Wertheim*, *Leopold*, *zwar*, *sondern*, *aber*.

JUNIOR GERMAN II.—AUTHORS.
HONOURS.

1. Translate, and, where necessary, explain the following passages from Spielhagen, Auf der Düne; Scheffel, Der Trompeter von Säkkingen.
2. Give a brief account of Scheffel's life.

GEOMETRY AND GEOMETRICAL CONICS.
HONOURS.
TWO HOURS.

1. The middle points of the three diagonals of a quadrilateral lie on a straight line, and the circles on the diagonals as diameters cut the circumcircle of the diagonal triangle at right angles.

2. State without proof the chief features and properties of any geometrical figure which persist after inversion.

   Two figures F and F′ are inverse with respect to a circle C. Show that any circle which cuts C orthogonally cuts F and F′ in corresponding points.

3. X, Y are harmonic conjugates of A and B; show that any circle through X and Y cuts at right angles the circle on AB as diameter.

   The centres of two circles are C and C′. The circle of similitude cuts at right angles the circle on the join of the two centres as diameter.

4. Define the anharmonic ratios of a range, of a pencil. Show that this latter is always the same, no matter what transversal is taken, specially examining the case of a transversal drawn parallel to one ray.

5. What is a solid angle? In every solid angle the sum of the plane angles is less than four right angles.

   What is the greatest value of each plane angle in the case of (i.) a regular trihedral, (ii.) a regular tetrahedral, (iii.) a regular n-hedral solid angle?

6. Prove that the section of a cone by a plane is a hyperbola, parabola or ellipse, according as the angle between the axis of the cone and the plane of the section is less than equal to or greater than the semi-vertical angle of the cone. Express the eccentricity of the conic in terms of these two angles.

7. Prove the equation $PN^2 = 4AS.AN$.

   AB is a fixed straight line; M is any point in MX, the perpendicular bisector of AB; through M a line is drawn parallel to AB meeting the perpendicular bisector of AM in P. Show that the locus of P is a parabola whose focus is A and directrix MX.

8. Show that in any conic $SG = .eSP$.

   The circle through the foci of a central conic and any point on the conic cuts the minor axis in the point where the normal through P does.

   If the conic is central and the normal meet the minor axis in g, prove that $Sg^2 = Gg.Pg$.

9. Through S the focus of a hyberbola SPQ is drawn parallel to an asymptote cutting the curve in P and the directrix in Q. Show that $SQ = 2SP = SL$.

ALGEBRA.

HONOURS.

TWO HOURS.

1. Solve the equations—

(i.) $(a-x)^5+(b-x)^5=(a-b)^5$,

(ii.) $\dfrac{yz-x^2}{x}=\dfrac{zx-y^2}{y}=\dfrac{xy-z^2}{z}=\dfrac{a^4}{xyz}$.

2. The roots of the equation $x^3+px^2+qx+r=0$ are α, β, γ; find the values of $\alpha+\beta+\gamma$, $\alpha^2+\beta^2+\gamma^2$, $\alpha^3+\beta^3+\gamma^3$, $\alpha^4+\beta^4+\gamma^4$ in terms of p, q and r.

Hence or otherwise eliminate x, y, z between $x+y+z=0$, $x^2+y^2+z^2=a$, $x^3+y^3+z^3=b$ and $x^4+y^4+z^4=c$.

3. Show how the sum to n terms of the series whose n^{th} term is $\phi(n)x^n$ may be found, where $\phi(n)$ is a rational integral function of n.

Sum the series—

(i.) $1^2+2^2x+3^2x^2 \ldots\ldots n$ terms.

(ii.) $\dfrac{2^3}{3.4}+\dfrac{3^3x}{8.5}\ldots\ldots+\dfrac{n^3x^{n-2}}{(n^2-1)(n+2)}\ldots\ldots$

4. What is meant by an infinite series being (i.) convergent, (ii.) absolutely convergent, (iii.) uniformly convergent.

Discuss the convergency of the following infinite series—

(i.) $1-\frac{1}{2}+\frac{1}{3}-\frac{1}{4}+\ldots\ldots$

(ii.) $1+\dfrac{2^4}{2!}+\dfrac{3^4}{3!}+\ldots\ldots$

(iii.) $1+nx+\dfrac{n(n-1)x^2}{2!}+\dfrac{n(n-1)(n-2)x^3}{3!}\ldots\ldots$

where n is not a positive integer.

5. If $f(x)=1+x+\frac{x^2}{2!}+\frac{x^3}{3!}\ldots$, prove that $f(x)\times f(y)=f(x+y)$, and deduce the exponential theorem.

Prove that $e^x\times e^{\frac{x^3}{3}}\times e^{\frac{x^5}{5}}\ldots$ to $\infty=\sqrt{\frac{1+x}{1-x}}$.

6. Prove that the arithmetic mean of n positive quantities is not less than their geometric mean.

If $x_1x_2\ldots x_n$ and also $a_1a_2\ldots a_n$ be positive quantities, prove that $\Sigma\left(a_1^2\right)\times\Sigma\left(x_1^2\right)\geqq\Sigma\left(a_1x_1\right)^2$

7. What is the meaning of the word "probability" as used in mathematics?

Show that of a number of independent events the probability of their all happening is the product of the probabilities that each occurs separately.

The probability that an event A will happen is a, that B will happen is b, that C will happen is c. Write down the probability of each of the following occurring—

(i.) None happening,

(ii.) Any two happening,

(iii.) A, and A only, happening.

8. Prove the rule for multiplying together two determinants.

Solve the equation

$$\begin{vmatrix} 0 & (x-a')^2 & (x-b')^2 \\ (x-a)^2 & (a-a')^2 & (x-b')^2 \\ (x-b)^2 & (b-a')^2 & (b-b')^2 \end{vmatrix}=0,$$

by expressing the determinant as the product of two determinants.

TRIGONOMETRY.

HONOURS.

TWO HOURS.

1. If $\cos^2\alpha+\cos^2\beta-2\cos\alpha\cos\beta\cos\omega=\sin^2\omega$, prove that $\omega=\alpha\pm\beta$.

2. Find an expression for the circumradius of a triangle.

Show that $OH=R\sqrt{1-8\cos A\cos B\cos C}$, O and H being the circumcentre and orthocentre respectively.

3. If α, β, γ, δ are the exterior angles of a quadrilateral ABCD and a, b, c, d the sides AB, BC, CD, AD, show that

$$a\cos\alpha+b\cos(\alpha+\beta)+c\cos(\alpha+\beta+\gamma)+d\cos(\alpha+\beta+\gamma+\delta)=0$$
$$a\sin\alpha+b\sin(\alpha+\beta)+c\sin(\alpha+\beta+\gamma)+d\sin(\alpha+\beta+\gamma+\delta)=0$$

4. Show how to expand $\cos n\theta$ in powers of $\sin\theta$ and $\cos\theta$, and write down the last term when n is a positive integer.

Prove that $4\cos^2\frac{\pi}{7}$ is one root of the equation

$$x^3-5x^2+6x-1=0.$$

5. Prove that the real part of $\frac{i^n-1}{i-1}$, where $i\equiv\sqrt{-1}$, is $\frac{1}{2}\left(1+\sin\frac{n\pi}{2}-\cos\frac{n\pi}{2}\right)$ and the imaginary part $\frac{1}{2}i\left(1-\sin\frac{n\pi}{2}-\cos\frac{n\pi}{2}\right)$.

6. If $\cos\phi=\frac{1+\sin\theta\cos\theta}{\sqrt{(1+2\sin\theta\cos\theta+\sin^2\theta)}}$, show that $\cot\phi=1+\cot\theta+\cot^2\theta$.

Hence show that

$$\cot^{-1}(1+\cot\theta+\cot^2\theta)=\sin\theta.\sin\theta-\sin^2\theta\frac{\sin2\theta}{2}+\frac{\sin^3\theta.\sin3\theta}{3}-\&c.$$

7. Expand $\log_e(1-2x\cos\theta+x^2)$ in ascending powers of x and deduce the expansion of $\frac{x-\cos\theta}{1-2x\cos\theta+x^2}$.

8. Find the sum of n terms of the series

$$\cos\alpha+\cos(\alpha+\beta)+\cos(\alpha+2\beta)+\ldots$$

Find the sum of all the lines that can be drawn from one angular point of a regular n-sided polygon of side a to all the other angular points.

MECHANICS.

HONOURS.

TWO HOURS.

1. Investigate the conditions of equilibrium of any system of forces acting upon a rigid body in a plane.

An equilateral triangle of side a is supported by a string which has its ends fastened to two angular points and passes through a smooth fixed ring. Prove that, if the triangle hang with one side vertical, the length of the string is $\sqrt{3}a$.

2. Two rods AB, CD are each capable of motion in the same horizontal plane about smooth pivots at their middle points. A, C and B, D are connected by tight strings. Show that, when in equilibrium, either the rods or the strings must be parallel.

3. Prove the formulæ $\bar{x}=\frac{\Sigma(mx)}{\Sigma(m)}$, etc., for determining the position of the centre of mass of a number of particles in one plane.

Four equal uniform rods are jointed together so as to form a flexible rhombus ABCD. If the rod AB is fixed, prove that when the other rods are moved, the centre of gravity of the rhombus describes an arc of a circle.

4. A heavy uniform rod rests with its extremities on the interior of a rough vertical circle. Prove that in the limiting position of equilibrium it makes an angle θ with the horizon given by the equation $\tan\theta(\cos 2\epsilon+\cos 2\alpha=\sin 2\epsilon$, where ϵ is the angle of friction and 2α is the angle subtended by the rod at the centre of the circle.

5. Define the velocity and the acceleration of a moving point, noticing any assumptions involved in your definitions.

Show how to find (i.) the relative velocity, (ii.) the relative acceleration of two points on the rim of a wheel of a moving carriage.

6. Define work and power, and state the units in which they are generally measured.

A train running at a full speed of 20 miles per hour slips a carriage of mass 15 tons and the full speed rises to 25 miles per hour; find the horse-power of the engine and the mass of the train, the resistance due to friction, etc., being 12·5 lbs. per ton.

7. A particle is describing a circle with speed v. Prove that its acceleration in the direction of the normal is $\frac{v^2}{a}$, where a is the radius of the circle.

A particle of mass m is attached to a light string of length l which hangs vertically. What horizontal impulse must be applied to the particle so that it may just describe complete circles in a vertical plane?

Prove that in describing such circles, the sum of the tensions of the string when the particle is at opposite extremities of any diameter is the same.

8. State the two principles employed in problems relating to collision, and deduce from them that when two small smooth spheres impinge directly the impulse during restitution bears a fixed ratio to the impulse during compression.

A smooth sphere resting against a smooth elastic plane is struck directly by an equal elastic sphere moving with volocity V perpendicular to the plane. Find the velocity of each sphere after the impact, the coefficient of restitution being e and it being assumed that the moment of greatest compression is the same for each collision.

ANALYTICAL GEOMETRY.

HONOURS.

TWO HOURS.

1. Find the angle between the lines

$$y=mx+c,$$
$$y=m'x+c'.$$

2. Prove that

$$12x^2+7xy-12y^2+13x-16y-4=0$$

is the equation of a pair of perpendicular lines, and find the distance of their point of intersection from the origin. Find also the equation of the lines through that point perpendicular to the lines

$$(y-2x)(y-3x)=0.$$

3. Prove that the equation

$$a(x^2+y^2)+2fx+2gy+c=0$$

represents a circle, and find the length of its radius.

Find analytically the locus of the middle points of chords of a circle which pass through a fixed point.

4. Prove that the equation of the tangent at $(x'y')$ to the parabola

$$y^2=4ax$$

is

$$yy'=2a(x+x').$$

The tangents at P, P′ meet in the point (h, k). Show that the line PP′ touches the parabola

$$4yk+(x-2a+h)^2=0.$$

5. Prove that the equations of the outward drawn normal to the ellipse

$$\frac{x^2}{a^2}+\frac{y^2}{b^2}=1$$

at the point whose eccentric angle is θ are

$$\frac{x-a\cos\theta}{\dfrac{\cos\theta}{a}}=\frac{y-b\sin\theta}{\dfrac{\sin\theta}{b}}=pr$$

where p is the perpendicular from the centre upon the tangent at the point.

The normal at P meets the major axis in G, and the conjugate diameter CD in F. Prove that

$$\mathrm{PF}.\mathrm{PG}=b^2.$$

6. Prove that the locus of the middle points of chords of the hyperbola

$$\frac{x^2}{a^2}-\frac{y^2}{b^2}=1$$

parallel to the line $y=mx$, is the line $y=m'x$, where

$$mm'=\frac{b^2}{a^2}.$$

If CP and CD are the lines $y=mx$ and $y=m'x$ of this question, and P lies on the given hyperbola, and D on its conjugate,

$$\mathrm{CP}^2-\mathrm{CD}^2=a^2-b^2.$$

7. Show that the equation of a conic of latus rectum l and eccentricity e may be written

$$\frac{l}{r}=1+e\cos\theta.$$

Deduce that the semi-latus rectum is a Harmonic Mean between the segments of a Focal Chord.

8. Prove that the tangents to an ellipse at points whose eccentric angles are θ, θ', $\pi+\theta$, $\pi+\theta'$, form a parallelogram of area $\dfrac{4ab}{\sin(\theta-\theta')}$.

DIFFERENTIAL CALCULUS.

HONOURS.

TWO HOURS.

1. Explain what is meant by the limit of $f(x)$ when $x=a$, and calculate the following limits

(i.) $Lt\left(\dfrac{1-\cos\theta+\sin\theta}{\tan\theta}\right)$ when $\theta=0$.

(ii.) $Lt\left(\dfrac{x^3-4x^2+4x-3}{x^3-2x^2-2x-3}\right)$ when $\theta=3$.

2. Give a geometrical and a kinematical illustration of the existence of a limiting value of a fraction whose numerator and denominator vanish in the limit.

3. Define the differential coefficient of $f(x)$ with regard to x, and obtain from your definition the differential coefficients of

(i.) $\sin(ax+b)$,

(ii.) e^{ax+b}.

4. Obtain the rule for the differentiation of the quotient u/v, and apply it to obtain $\dfrac{dy}{dx}$ when

$$y=\frac{x\sqrt{a+x}}{\sqrt{a}-\sqrt{a-x}}.$$

Give another and better method of finding this differential coefficient.

5. Differentiate the following expressions

(i.) $x+\log\cos\left(\frac{\pi}{4}-x\right)$

(ii.) $\frac{x}{\sqrt{1+x^2}}$

(iii.) $\sin^{-1}\left(\frac{1-x}{1+x}\right)$

(iv.) $\frac{1}{2\sqrt{2}}\log\frac{\sqrt{(2+2x^2)}-x}{\sqrt{(2+2x^2)}+x}+\log(x+\sqrt{1+x^2})$

(v.) $\log\left(\frac{3+4\tan\frac{x}{2}}{3-4\tan\frac{x}{2}}\right)$

6. Show that the curves

$$y^2=+2ax+a^2$$
$$y^2=-2bx+b^2$$

cut at right angles.

7. By means of the differential coefficients of the functions

$$x-\log_e(1+x)$$
$$x-\frac{x^2}{2}-\log_e(1+x)$$

prove that $\log_e(1+x)$ is less than x, but greater than $x-\frac{x^2}{2}$ for x, a positive proper fraction.

8. An open copper tank, in the form of a rectangular box, has to be made of given capacity, at the lowest cost of material. Show that if its length is a times its breadth, its height must be $\frac{a}{a+1}$ times its breadth.

SECOND YEAR EXAMINATION.

LATIN PROSE COMPOSITION AND TRANSLATION AT SIGHT.

The same papers as those set in the Third Year Examination.

LATIN AUTHORS.

HONOURS.

1. Translate and comment on extracts from Cicero's Letters.
2. Translate and comment on extracts from Plautus, Captivi and Trinummus.
3. Scan the following lines, with such comments as you think called for—

   (*a*) Nam fulguritae sunt alternae arbores:
   Sues moriuntur angina acerrume.

   (*b*) Prope modum ubi loci fortunae tuae sint facile intellegis.
   Si eris verax, tuam rem facies ex mala meliusculam.

   (*c*) Quod quom scibitur, tum per urbem inridebor.
   Quom extemplo ad forum advenero, omnes loquentur.

   (*d*) Nam doli non doli sunt, nisi astu colas,
   Sed malum maxumum, si id palam provenit.

   (*e*) Hic nunc domi servit suo patri, nec scit pater.

ROMAN HISTORY.

HONOURS.

ONE HOUR AND A HALF.

Not more than FIVE *questions to be answered.*

1. "The legislation of Gaius Gracchus seems full of contradictions." (*Taylor.*)
   Justify this statement.
2. "In the character of Pompeius there is scarcely one point to admire, there are many to condemn." (*Taylor.*)
   Examine this.
3. Discuss the legality of Cicero's treatment of the Catilinarian conspirators.

4. Sketch the history of the "Italian Question" during your period.

5. Cæsar was the first man to take an imperial view of the Empire." (*Taylor.*)

   Explain this, giving a brief account of Cæsar's most important measures.

6. "Sulla potuit, ego non potero?" What is Sulla's importance in Roman history?

GREEK PROSE COMPOSITION.

The same paper as that set in the First Year Examination.

ARISTOTLE, POETICS, AND HISTORY OF GREEK DRAMA.

(*Not more than* SIX *questions are to be attempted.—No. 1 is obligatory.*)

1. Translate—

   ἔτι δ' ἐπεὶ τὸ καλὸν καὶ ζῷον καὶ ἅπαν πρᾶγμα ὃ συνέστηκεν ἐκ τινῶν οὐ μόνον ταῦτα τεταγμένα δεῖ ἔχειν ἀλλὰ καὶ μέγεθος ὑπάρχειν μὴ τὸ τυχόν· τὸ γὰρ καλὸν ἐν μεγέθει καὶ τάξει ἐστίν, διὸ οὔτε πάμμικρον ἂν τι γένοιτο καλὸν ζῷον, συγχεῖται γὰρ ἡ θεωρία ἐγγὺς τοῦ ἀναισθήτου χρόνου γινομένη, οὔτε παμμέγεθες, οὐ γὰρ ἅμα ἡ θεωρία γίνεται ἀλλ' οἴχεται τοῖς θεωροῦσι τὸ ἕν καὶ τὸ ὅλον ἐκ τῆς θεωρίας, οἷον εἰ μυρίων σταδίων εἴη ζῷον· ὥστε δεῖ καθάπερ ἐπὶ τῶν σωμάτων καὶ ἐπὶ τῶν ζῴων ἔχειν μὲν μέγεθος, τοῦτο δὲ εὐσύνοπτον εἶναι, οὕτω καὶ ἐπὶ τῶν μύθων ἔχειν μὲν μῆκος, τοῦτο δὲ εὐμνημόνευτον εἶναι.

2. What directions does Aristotle give as to the proper length of a tragedy? Criticise.

3. What do we gather from the Poetics as to the origin of drama? Criticise Aristotle's account, and give in outline other possible theories.

4. *ἡ δὲ [ἐποποιία] μόνον τοῖς λόγοις ψιλοῖς ἢ τοῖς μέτροις καὶ τούτοις εἴτε μιγνῦσα μετ' ἀλλήλων εἴθ' ἑνί τινι γένει χρωμένη τῶν μέτρων ἀνώνυμος τυγχάνουσα μέχρι τοῦ νῦν.* Explain.

5. What does Aristotle say of the "successive changes through which Tragedy passed and the authors of these changes"? Can you amplify his account?

6. ἡ δὲ ὄψις ψυχαγωγικὸν μέν, ἀτεχνότατον δὲ καὶ ἥκιστα οἰκεῖον τῆς ποιητικῆς.

Examine the bearing of this dictum upon modern drama.

7. Does Aristotle's theory of dramatic art admit the historical drama? If so, how?

8. Give Aristotle's classification of the εἴδη ἀναγνωρίσεως, with examples.

9. Examine the validity of Aristotle's comparison of Tragedy and Epic.

10. Give in outline, with reference to the extant plays, the history of the Greek Chorus.

11. What, briefly, are the arguments in favour of the view that the drama of the fifth century B.C., was not performed on a raised stage of the type usual later?

12. What do you know of the Ekkyklema and its use?

13. What has Aristotle to say on the relation of Art to Morality?

14. οὔκουν ὅπως τὰ ἤθη μιμήσωνται πράττουσιν, ἀλλὰ τὰ ἤθη συμπαραλαμβάνουσιν διὰ τὰς πράξεις· ὥστε τὰ πράγματα καὶ ὁ μῦθος τέλος τῆς τραγῳδίας.

Criticise this.

ENGLISH I.

HONOURS.

1. Translate the following passages from Sweet's *Old English Primer*, and explain the derivation of relationship of the underlined words.

2. (*a*) Write down in full the present indicative of the following verbs—Sécan, biddan, wrítan, hréosan, swincan, brecan, faran, feallan.

   (*b*) Decline in Anglo Saxon—*This old man; a good gift; the evil eye.*

   (*c*) Explain the grammatical peculiarites of the following—Ut éode se sǽwere his sǽd tó sawenne: éalá þú léofa cyning; hwý stande gé hér? Sóþlice, upp sprungenre sunnan, hie ádrúgodon: hund twelftig.

3. Translate passages from Maldon and Brunanburh.

4. Point out the lines in 3. (*a*) in which the normal alliterative system is not perfectly observed, and indicate the irregularity.

5. Translate (at sight)—

Moises se mǣra mid þām þe hē wæs on ylde hundtwęntig wintra, ðā gewāt hē of līfe, and God silf hine bebirigde, and gesęette Iosue on Moyses stęde þām mannum tō hęretogan, and Moyses hæfde hine ǣr gebletsod, and God silf him behēt þæt hē wolde mid him bēon, swā swā hē mid Moyse wæs, on miclum wundrum. Sēo bōc þe hē gesęette, *Liber Iosue*, sęgð hū hē fērde mid Israhēla folce tō Abrahāmes earde, and hū hē þone eard gewann, and hū sēo sunne ætstōd, oð þæt hē sige hæfde, and hū hē þone eard ealne tōdǣlde; on þām man mæg scēawian Godes micclan wundra mid weorcum gefręmode. His fæder hātte Nun, and hē leofode hund gēara and tȳn gēar tōēacan, and hē siþþan gewāt æfter his micclan sige. Iosue hæfde ðæs Hǣlendes getācnunge mid þām þe hē gelǣdde tō þām lande þæt folc, þe him behāten wæs, swā swā se Hǣlend dēð, þe lǣtt tō heofenan rīce þā ðe on hine gelȳfað, gif hí mid gódum weorcum hine gegladiað.

6. Translate into Anglo-Saxon—

They all fought against the king till they had slain him. He said that the land of the Northmen was very long and very narrow. Alfred, son of Ethelwulf, was king over all England except the part that was under the sway of the Danes. There are very many cities in the land, and in each city is a king.

ENGLISH II.

HONOURS.

1. Translate, with any such comments as may be requisite on the grammar, references, or variant interpretation, passages from Pollard's *Miracle* plays.

2. What contemporary influences are perceptible in *The Four Elements*, *Thersytes*, and *King John*?

3. Discuss the component parts of *Mary Magdalene*.

4. Translate and discuss the historical significance of the lines—

Hyt ys forbode hym yn the decre
Miracles for to make or se;
For miracles, þyf you begynne,
Hyt ys a gaderynt, a syght of synne.
He may yn the Cherche, thurgh thys resun,
Pley the resurrecyun;
That is to seye, how god ros,
God and man yn myght and los,
To make men be yn beleve gode,
That he ros with flesshe and blode;
And he may pleye withoutyn plyght
How god was born yn thole nyght,
To make men to beleve stedfastly
That he lyght yn the vyrgyne Mary.
ȝyf thou do hyt in weyys or grenys,
A syght of synne truly hyt semys.

5. Give an account of the plot and performance of the *Castle of Perseverance*.

SENIOR FRENCH I.

PROSE COMPOSITION, UNSEEN TRANSLATION, AND LITERATURE.

HONOURS I.

1. Translate into French—

Such was my own first interview with Dr. Parr; such its issue. And now let me explain my drift in thus detailing its circumstances. Some people will say the drift was doubtless to exhibit Dr. Parr in a disadvantageous light as a petty gossiper, and a man of mean personal appearance. No! by no means. Far from it. I, that write this paper, have a mean personal appearance; and I love men of mean appearance. Having one spur more than other men to seek distinction in those paths where nature has not obstructed them, they have one additional chance (and a great one) for giving an extended development to their intellectual powers. Many a man has risen to eminence under the powerful reaction of his mind, in fierce counter-agency (sometimes even more nobly in grand benignant indifference) to the scorn of the unworthy, daily evoked by his personal defects, who with a hand-

some person would have sunk into the luxury of a careless life, under the tranquillizing smiles of continual admiration. Dr. Parr, therefore, lost nothing in my esteem by showing a meanish exterior. Yet even this was worth mentioning, and had a value in reference to my present purpose. I like Dr. Parr. I may say even that I love him; for some noble qualities of heart that really did belong to him, and were continually breaking out in the midst of his singular infirmities. But this, or a far nobler moral character than Dr. Parr's, can offer no excuse for giving a false elevation to his intellectual pretensions, and raising him to a level which he will be found incapable of keeping when the props of partial friendship are withdrawn. My object is to value Dr. Parr's claims, and to assign his true station both in literature and in those other walks of life upon which he has come forward as a public man.

2. Translate (at sight)—

(*a*) Les magnifiques moisissures de la mer mettaient du velours sur les angles du granit. Les escarpements étaient festonnés de lianes grandiflores, adroites à ne point tomber, et qui semblaient intelligentes, tant elles ornaient bien. Des pariétaires à bouquets bizarres montraient leurs touffes à propos et avec goût. Toute la coquetterie possible à une caverne était là. La surprenante lumière édénique qui venait de dessons l'eau, à la fois pénombre marine et rayonnement paradisiaque, estompait tous les linéaments dans une sorte de diffusion visionnaire. Chaque vague était un prisme. Les contours des choses, sous ces ondoiements irisés, avaient le chromatisme des lentilles d'optique trop convexes; des spectres solaires flottaient sous l'eau. On croyait voir se tordre dans cette diaphanéité aurorale des tronçons d'arcs-en-ciel noyés. Ailleurs, en d'autres coins, il y avait dans l'eau un certain clair de lune. Toutes les splendeurs semblaient amalgamées là pour faire on ne sait quoi d'aveugle et de nocturne. Rien de plus troublant et de plus énigmatique que ce faste dans cette cave. Ce qui dominait, c'était l'enchantement. La végétation fantasque et la stratification informe s'accordaient et dégageaient une harmonie. Ce mariage de choses farouches était heureux, des ramifications se cramponnaient en ayant l'air d'effleurer. La caresse du roc

sauvage et de la fleur fauve était profonde. Des piliers massifs avaient pour chapiteaux et pour ligatures de frêles guirlandes toutes pénétrées de frémissement, on songeait à des doigts de fées chatouillant des pieds de béhémoths, et le rocher soutenait la plante et la plante étreignait le rocher avec une grâce monstrueuse.

(*b*) Les maisons ont un air fâché, rogue et bourru;
Les fenêtres, luisant d'un luisant de limace,
Semblent cligner des yeux et faire la grimace,
Et de chaque escalier et de chaque pignon
Il sort je ne sais quoi de triste et de grognon.
Des portes à claveaux du temps de Louis treize,
Des bonshommes de pierre avec pourpoint et fraise,
Des cours avec arceaux en anses de panier,
Force carreaux cassés, maint immense grenier,
Des tours, de grands toits bleus sur de façades rouges,
—Ce serait des palais si ce n'était des bouges,—
Voilà ce qu'on rencontre à chaque pas; et puis
De maussades enfants groupés au bords des puits;
Quelques arbres malsains, tout couverts de verrues,
Percent le long des murs les pavés dans les rues;
Les écriteaux sont peints d'un gothique alphabet;
Les poteaux à lanterne ont un air de gibet;
Les vastes murs, les toits aigus, les girouettes,
Font sur le ciel brumeux de mornes silhouettes.
C'est surtout effrayant et lugubre le soir.
Le jour, les habitants sont rares. On croit voir
Partout le même vieux avec la même vieille.
De ces réduits vitrés en verres de bouteille,
Dans ces trous où jamais le soleil n'arriva,
On entend bougonner le siècle qui s'en va.

3. Literature—

(*a*) "Les Français n'ont pas la tête épique."

Discuss this in French.

(*b*) Compare and contrast the characters of Saint Louis and his biographer.

(*c*) "Les fableaux nous présentent une image fidèle et sans prétention de tous les types de la société."

Is this true?

(*d*) Account for the popularity of the Roman de la Rose in the middle ages.

(*e*) Give a short account of the life and works of Villon *or* Froissart.

SENIOR FRENCH II.

AUTHORS.

HONOURS.

1. Translate into English, extracts from Clédat, Chanson de Roland.
2. Write down the Popular Latin forms of the following words, and account for the persistence, modification or loss of each letter—*piz*, *vuide*, *vedude*, *doel*, *jode*.
3. Translate into English, extracts from Joinville, Historie de St. Louis.
4. What phonetic peculiarities distinguish the dialect of Joinville from that of the Ile de France?

SENIOR GERMAN I.

COMPOSITION, UNSEEN TRANSLATION, AND LITERATURE.

HONOURS.

1. Translate—

The assertion, that truth is often no less dangerous than falsehood, sounds less offensively at the first hearing, only because it hides its deformity in an equivocation, or double meaning of the word truth. What may be rightly affirmed of truth, used as synonymous with verbal accuracy, is transferred to it in its higher sense of veracity. By verbal truth we mean no more than the correspondence of a given fact to given words. In moral truth, we involve likewise the intention of the speaker, that his words should correspond to his thoughts in the sense in which he expects them to be understood by others: and in this latter import we are always supposed to use the word, whenever we speak of truth absolutely, or as a possible subject of moral merit or demerit. It is verbally true, that in the sacred Scriptures it is written: "As is the good, so is the sinner, and he that sweareth as he that feareth an oath. A man hath no better thing under

the sun, than to eat, and to drink, and to be merry. There is one event unto all: the living know they shall die, but the dead know not anything, neither have they any more a reward." But he who should repeat these words, with this assurance, to an ignorant man in the hour of his temptation, lingering at the door of the alehouse, or hesitating as to the testimony required of him in the court of justice, would, spite of this verbal truth, be a liar, and the murderer of his brother's conscience.

2. Translate (at sight)—

Die Lebensverhältnisse, welche hinter der ersten Gruppe von George Sands Romanen liegen, sind bekannt. Sie wurde 1804 geboren. Früh verlor sie ihren Vater; eine leidenschaftliche und unvernünftige Mutter und eine feine, verständige Großmutter waren ihr geblieben. Ihre Jugendjahre brachte sie auf dem Gute Nohant in Berry zu. Hier tummelte sie sich in frischer Luft; sie liebte die freie Natur und verkehrte mit Bauernkindern wie mit ihresgleichen. Sie war demokratisch, aber deshalb nicht weniger romantisch angelegt. Wie Chateaubriand in seiner frühen Jugend sich das Bild eines ideal schönen Weibes schuf, von dem er stets träumte, so formte sich George Sand in ihren frühesten Phantasien das Bildnis eines Helden, dem sie einen Altar von Stein und Moos in einer Ecke ihres Gartens errichtete und dem sie mit einer üppigen Erfindungsgabe zahlreiche Großthaten beilegte. Als sie mit dreizehn Jahren nach Paris in ein Kloster gebracht wurde, um dort erzogen zu werden, vermißte sie anfangs schmerzlich ihr freies Landleben, dann warf sie sich eine Zeit lang mit Feuereifer und Schwärmerei der Religion in die Arme. Dieser Aufschwung wurde noch vor ihrer Rückkehr nach Nohant von dem Interesse für Schauspielkunst und poetische Studien abgelöst. Als erwachsenes junges Mädchen liest sie in ländlicher Umgebung zum ersten Male Rousseau und fühlt sich davon so getroffen, wie es der Fall ist, wenn man sein eignes Wesen plötzlich vor sich selbst erschlossen sieht. Sie wird Rousseau's Schülerin, sie hört niemals auf, es zu sein. Sein Natursinn und Naturkultus, sein Deismus, sein Glaube an die Gleichheit und seine Liebe zu derselben, seine trotzige Haltung gegenüber der sogenannten civilisierten Gesellschaft entsprachen ihren eigensten Neigungen und anticipierten gleichsam Gefühle, die auch in ihrer Seele schlummerten.

3. (*a*) Compare the *Heliand* and Otfried's *Christ*.
   (*b*) Discuss the surviving fragments of German Heathen Poetry.
   (*c*) Compare and contrast the sources of the *Nibelungenlied* and the *Kudrun*.
   (*d*) Who are the chief Arthurian poets of Medieval Germany?
   (*e*) Briefly describe the art of the Minnesingers.

SENIOR GERMAN II.

AUTHORS.

HONOURS.

1. Translate into English, extracts from the Middle German Primer.
2. (*a*) Decline *Balc*.
   (*b*) Give the strong declension in all three genders of the adjective *blint*.
   (*c*) Conjugate throughout, in the present and past indicative, the verb *brechen*.
3. Translate into English, extracts from Gudrun, Deutsche Classiker der Mittelalten.
4. Describe the Kudrun stanza, and show how it indicates the relative date of the poem.

STATICS AND DYNAMICS.

HONOURS.

1. State and prove the Polygon of Forces.
   If O, A, B, C, D, . . Z are fixed points, and points P, Q, R . . . are taken in AB, BC, CD . . . YZ, ZA respectively, so that

$$\frac{AP}{PB}=\frac{BQ}{QC}=\frac{CR}{RD}=\ldots,$$

   show that the resultant of the forces represented by OP, OQ, OR, . . . is constant in magnitude and direction.
2. Define the angle of friction. Explain the use of the cone of friction.

A rough hollow cylinder is fixed with its axis at an inclination α to the horizon. A rod rests within it in a horizontal position. Prove that the greatest value of α is given by $\tan \epsilon = \cos \theta \tan \alpha$, where $\sin \theta$ is the ratio of the length of the rod to the diameter of the cylinder, and ϵ is the angle of friction.

3. Find the centre of mass of a uniform triangular lamina. Hence or otherwise prove that, if the density at any point of a sphere is inversely proportional to the distance of the point from a fixed tangent plane, the centre of mass divides the diameter through the point of contact in the ratio of 1 : 2.

4. Enunciate the principle of virtual work for forces acting on a rigid body.

Four rigid weightless bars of equal length are freely jointed at their extremities so as to form a rhombus ABCD. AC and B, D are connected by strings of which the tensions are respectively P and Q when the figure is in equilibrium. By employing the principle of virtual work prove that $\cos \mathrm{BAD} = \dfrac{Q^2 - P^2}{Q^2 + P^2}$.

5. Define the angular velocity of a moving point about a fixed point, and show how to find the relative angular velocity of two particles moving in the same plane whose linear velocities are given.

A circular cylinder rolls on a horizontal plane with uniform angular velocity; within it rolls a smaller cylinder also with uniform angular velocity. If the smaller rolls round the circumference of the larger in the time taken by the latter to make one revolution, compare their angular velocities.

6. A particle of elasticity e is let fall from a height h above an inclined plane of inclination α and rebounds. Find the time of the first rebound and the space described along the plane therein.

Also show that the spaces along the plane described in successive rebounds form a geometrical progression whose common ratio is $e(1+e)$.

7. Define simple harmonic motion and prove from its equation that such motion is isochronous.

Establish the same fact from the consideration of the dimensions of the quantities involved in the problem.

A particle is attached to the middle point of a light elastic string whose ends are fixed at two points in the same horizontal line at a distance apart equal to the unstretched length of the string. If in the position of equilibrium the length of the string is $\frac{5}{4}$ of its unstretched length, find the modulus of elasticity. Find also the time of a small vertical oscillation.

8. Prove the equation

$$\frac{d^2u}{d\theta^2}+u=\frac{P}{h^2u^2}$$

for the orbit of a particle moving under a central force.

Find the force to the pole under which the equiangular spiral $r=ae^{\theta\cot\alpha}$ can be described, and prove that the velocity at any point varies inversely as the radius vector.

DIFFERENTIAL AND INTEGRAL CALCULUS.

HONOURS.

1. Prove that

$$\sinh^{-1}x=\log(x+\sqrt{x^2+1})$$
$$\cosh^{-1}x=\log(x\pm\sqrt{x^2-1})$$

and draw roughly the curves

$$y=\sinh^{-1}x$$
$$y=\cosh^{-1}x.$$

Show that the equation

$$\int\frac{dx}{\sqrt{x^2-1}}=\cosh^{-1}x$$

is true only if we take the positive sign in the expression for $\cosh^{-1}x$.

2. Differentiate the following functions—

(i.) $\cos^{-1}\left(\frac{a+b\cos x}{b+a\cos x}\right)$,

(ii.) $\tan\left(x+\tan^{-1}\frac{1}{x}\right)$,

(iii.) $\frac{e^x}{1+\cos x}$.

3. Establish the rule for finding the maxima and minima of a function of one variable.

Discuss the cases

(i.) $f(x)=2x^3-3x^2-36x+10$,

(ii.) $f(x)=4x^3-18x^2+27x-7$.

4. Prove Leibnitz' Theorem on the nth differential coefficient of a product.

Show that

$$D^n(x^n \log x)=n!\left(\log x+1+\frac{1}{2}+\frac{1}{3}+\ldots+\frac{1}{n}\right).$$

5. Prove that

$$\frac{rd\theta}{dr}=\tan\phi$$

where ϕ is the angle the tangent to the curve $r=f(\theta)$ at the point (r, θ), drawn on the side of θ increasing, makes with the positive direction of the radius vector.

Apply your result to the case of the parabola.

6. Prove that the centre of curvature is the intersection of two consecutive normals.

Apply your result to the case of the ellipse, and find the equation of the evolute of

$$\frac{x^2}{a^2}+\frac{y^2}{b^2}=1.$$

7. Establish the formula for Integration by Parts.

Integrate

(i.) $\int x^2 \cos x dx$

(ii.) $\int \frac{1+\sin x}{1+\cos x} e^x dx$ (*cf.* 2 (iii.))

8. Explain what is meant by saying that $\int_a^b f(x)dx$ is the limit of a certain sum. Establish algebraically the existence of this limit in the case of the function $\cos mx$ when a and b are 0 and $\frac{\pi}{2m}$ respectively.

9. Prove that

$$\text{(i.)} \int_0^{\pi} \frac{\sin^2 x}{1-k\cos x}dx = \frac{\pi}{1+\sqrt{1-k^2}} \quad (0<k^2<1),$$

$$\text{(ii.)} \int_0^{\frac{\pi}{2}} \frac{\sin 4\theta}{\sin\theta}d\theta = \frac{4}{3},$$

$$\text{(iii.)} \int_a^b x\sqrt{\frac{x-a}{b-x}}\,dx = \frac{\pi}{8}(b-a)(a+3b).$$

10. Show that the surface of a Solid of Revolution may be expressed as a Definite Integral, and apply your result to find the surface of the Anchor Ring formed by the revolution of the circle

$$(x-a)^2+y^2=b^2$$

about the axis of y.

CONICS AND DIFFERENTIAL EQUATIONS.

HONOURS.

1. $ax^2+2hxy+by^2+2gx+2fy+c=0$ represents a conic. Prove this and state the geometrical interpretation with respect to this conic of—

   (i.) $ax^2+2hxy+by^2=0$,
   (ii.) $2gx+2fy+c=0$,
   (iii.) $ax+hy+f=0$,
   (iv.) $hx+by+g=0$.

2. Trace the curves—

   (i.) $6x^2-13xy+6y^2+7x-8y+1=0$.
   (ii.) $\frac{x^2}{a^2}+\frac{2xy}{ab}+\frac{y^2}{b^2}+\frac{3x}{a}+\frac{2y}{b}=0$.

3. Find the equation of a conic touching the axes at the points $(h, 0)$ and $(0, k)$.

   Show that the line of centres of all these conics is $kx=hy$.

4. Show how any straight line may be projected to infinity, and at the same time any two angles into given angles.

Show how a quadrilateral may be projected into a parallelogram.

5. Prove that the equation of the tangent to the conic $\phi(\alpha, \beta, \gamma)=0$ at the point $(\alpha', \beta', \gamma')$ is

$$\alpha\frac{\delta\phi}{\delta\alpha'}+\beta\frac{\delta\phi}{\delta\beta'}+\gamma\frac{\delta\phi}{\delta\gamma'}=0.$$

Show that $\alpha+4\lambda\mu(\lambda\beta+m\gamma)=0$

touches the two conics $\alpha\beta=\mu^3\gamma^2$ and $\alpha\gamma=\lambda^3\beta^2$.

6. Investigate the condition that the equation

$$\mathrm{M}dx+\mathrm{N}dy=0$$

may be exact, and if the condition is satisfied, show how to integrate the equation.

Solve the equation

$$\tan y\,.\,dx-(x+\tan^2 y)\sec^2 y\,dy=0.$$

7. Show that the orthogonal trajectories of the parabolas $\frac{l}{r}=1+\cos\theta$ is a family of parabolas with the same focus and directrix, but all turned in the opposite direction.

8. Show that if a particular solution of the equation

$$\frac{d^2y}{dx^2}+\mathrm{P}\frac{dy}{dx}+\mathrm{Q}y=0$$

(P, Q being functions of x only) can be found, the general solution of

$$\frac{d^2y}{dx^2}+\mathrm{P}\frac{dy}{dx}+\mathrm{Q}y=\mathrm{R}$$

can be found.

Illustrate your answer by solving the equation

$$x^3\frac{d^2y}{dx^2}-x(x+\sin x)\frac{dy}{dx}+2\sin x\,.\,y=x,$$

having $y=x^2$ as a particular solution of

$$x^3\frac{d^2y}{dx^2}-x(x+\sin x)\frac{dy}{dx}+2\sin x\,.\,y=0.$$

9. The auxiliary equation of a linear differential equation with constant coefficients has a pair of imaginary roots. Shew how to find the corresponding part of the complementary function in a real form.

10. Solve the equations—

(i.) $\cos 2x\frac{dy}{dx}+2y=\sin 2x$,

(ii.) $x^2=y-\frac{1}{2}p^2$,

(iii.) $y=x\frac{dy}{dx}+\sqrt{a^2\left(\frac{dy}{dx}\right)+b^2}$,

(iv.) $(D^2+D+1)y=0$,

(v.) $(D+1)(D^2+2D+2)y=x^2+\sin 2x$.

PROBLEMS.

HONOURS.

1. The normals at P, Q, R, S on the ellipse

$$\frac{x^2}{a^2}+\frac{y^2}{b^2}=1$$

meet in a point, and the line RS always passes through the fixed point (α, β). Prove that PQ touches the parabola

$$\left(\frac{\alpha x}{a^2}+\frac{\beta y}{b^2}+1\right)^2=\frac{4\alpha\beta xy}{a^2b^2}$$

2. In the curve $r=\frac{a\sin\theta}{\theta}$, prove that the angle ϕ between the tangent and the radius vector is given by the equation

$$\frac{\sin(\phi-\theta)}{\sin\phi}=\frac{r}{a}$$

Hence show that the tangents at the infinite number of points, where the curve is met by the line $\theta=\theta_0$, all pass through the point $(a, 2\theta_0)$ on the circle $r=a$.

3. In the case of the curve

$$(y-x^2)^2=x^5,$$

show

(i.) that there is a cusp at the origin;

(ii.) that there is a point of inflexion on the lower branch where $x=(\frac{8}{15})^2$;

(iii.) that the area between the two branches cut off by the lines $x=0$ and $x=1$ is equal to $\frac{4}{7}$.

4. Prove that the orthogonal trajectories of the curves

$$\left(r-\frac{k}{r^2}\right)\cos\theta=\text{constant},$$

are the curves

$$\left(r^2+\frac{2k}{r}\right)\sin^2\theta=\text{constant}.$$

5. The Metronome consists of a prismatic bar AB of small cross-section, on which a movable weight p is fastened, and at one of the ends B a spherical weight is attached. It swings about a point O.

Let W=its weight.

b=the distance from O to A.

W'=the weight of the sphere.

r=its radius.

$a+r$=the distance of its centre from O.

h=the distance of the movable weight p (to be taken as a material point) from O.

Then the distance h for which this instrument will beat seconds is given by

$$\frac{g}{\pi^2}=\frac{W'\{(a+r)^2+\frac{2}{5}r^2\}+ph^2+\frac{1}{3}W(a^2-ab+b^2)}{W'(a+r)-ph-\frac{1}{2}W(b-a)}$$

6. Prove that the periodic time of a particle projected with velocity V from a point distant r from the origin, and having an acceleration $\frac{\mu}{r^2}$ to the origin is

$$\frac{2\pi}{\sqrt{\mu}}\left(\frac{2}{r}-\frac{V^2}{\mu}\right)^{-\frac{3}{2}}.$$

7. The weight of a window-sash is 5 lbs., and its width is 3 feet. The weights attached to the sash are each 2 lbs. If one of the cords be broken, show that the hand should be placed at a distance of 1 foot from the middle of the sash to raise it with the least effort.

8. A rod AB, hinged at one end so that it can move in a vertical plane, rests with the other end on a smooth inclined plane, whose line of intersection with the horizontal plane is perpendicular to the plane of AB's motion. Find the force exerted on the rod by the hinge.

LOGIC AND MENTAL PHILOSOPHY.

HONOURS II.

1. Show (*a*) that knowledge is always judgment, (*b*) that judgment is "construction for us of the real world," (*c*) that the process of construction is always both analysis and synthesis. Illustrate by reference to the hypothetical judgment, the "judgment of systematic necessity," and Bosanquet's criticism of symbolic logic.
2. State and criticise the general view of the nature of knowledge contained in (*a*) the common sense theory, or (*b*) the theory of subjective idealism.
3. Give a short psychological analysis of two of the following:—(*a*) "The sense of time," (*b*) "the thought of the same," (*c*) "unhealthiness of will."
4. Refer to some of the metaphysical problems which are suggested by psychology as a natural science.
5. What are the limits or defects of the experimental methods (Mill's methods) as applied to the social sciences?
6. State and discuss Mill's account of Ethology, and of its relations to the mental and social sciences.
7. Explain and illustrate each of the following fallacies discussed by Mill:—Fallacy of the Sufficient Reason; Fallacy of the Infinite; Fallacy of Mysticism.

HISTORY IV.

HONOURS.

You are recommended to answer SEVEN *questions and no more.*

1. "We have seen the Teuton endeavouring everywhere to identify himself with the system he overthrows."

   Explain and illustrate the views and the policy of the Teutons in respect to the Roman Empire.
2. "Henry the Fowler was no more a real king of all Germany than Egbert and Alfred were real kings over all England."

   Describe the condition of Germany in the time of Henry the Fowler, and compare it with the contemporary condition of England.

3. "The Holy Roman Church and the Holy Roman Empire are one and the same thing in two aspects." Explain.

4. "With the activity of the Normans first begins the preponderance of French ideas, customs, and language throughout the Western world." Explain.

5. "The premises once admitted—and no one dreamt of denying them—the reasonings by which he (Gregory VII.) established the superiority of spiritual to temporal jurisdiction were unassailable." Explain.

6. In Milman's opinion Gregory VII. is to be regarded "with great drawbacks, as a benefactor of mankind." Discuss.

7. "The supreme representative of a dying type." Discuss the description of St. Bernard.

8. "St. Francis of Assisi has been since Jesus the only perfect Christian." What is Renan's meaning?

9. Describe the character and the aims of Innocent III. To what extent was he successful? Discuss this statement that "in every triumph of Innocent there lay the shadow of future trouble."

10. "The history of modern Europe is the history of the development of nationalities." To what extent did nationalities develop during the period in Spain, France, Germany and Italy?

11. Sum up the services rendered to European civilisation by the Eastern or Byzantine Empire

12. "Resistance to God's vicar might be, and indeed was admitted to be, a deadly sin, but it was one which nobody hesitated to commit." Discuss.

THIRD YEAR EXAMINATION.

LATIN PROSE COMPOSITION.

HONOURS.

Translate into Latin—

France was once more subject to the absolute rule of an individual, and the character of that individual was one of the riddles of the age. Napoleon's personal courage was indisputable, but it was combined with invincible procrastination. No advice could turn him from his purpose, but no one could predict the moment when he would carry it out. He could not endure opposition, and he surrounded himself with clerks rather than ministers. Men like Guizot and Thiers refused to serve him, and he could never have tolerated their superiority. His early training had been that of a conspirator, and a conspirator he remained when he had attained the throne. There is little doubt that in his youth he had been mixed up in the plots of secret societies, and the associations then formed never ceased to hamper him. He was always afraid that any treachery to his old allies would lead to his assassination, and this fear had much to do with directing his policy towards Italy. He was a socialist in possession of absolute power, but he had to conciliate the established dynasties, which hated and dreaded socialism. Hence the apparent vacillation of his policy and the secrecy which always shrouded his designs. He was naturally indolent and averse to business; he would trust no one to do his work for him, and thus his administration was always defective. His ability was considerable, but it was the ability of an imitator. He had none of the original genius of his great uncle, and none of his power of choosing the best instruments.

LATIN UNSEEN TRANSLATION.

HONOURS.

Translate—

(*a*) I, pete uirginea, populus, suffimen ab ara;
Vesta dabit, Vestae munere purus eris.

Sanguis equi suffimen erit uitulique fauilla,
  Tertia res durae culmen inane fabae.
Pastor, oues saturas ad prima crepuscula lustra:
  Unda prius spargat, uirgaque uerrat humum,
Frondibus et fixis decorentur ouilia ramis,
  Et tegat ornatas longa corona fores.
Caerulei fiant uiuo de sulpure fumi,
  Tactaque fumanti sulpure balet ouis.
Ure mares oleas taedamque herbasque Sabinas,
  Et crepet in mediis laurus adusta focis.
Libaque de milio milii fiscella sequatur:
  Rustica praecipue est hoc dea laeta cibo.
Adde dapes mulctramque suas, dapibusque resectis
  Siluicolam tepido lacte precare Palem.
"Consule" dic "pecori pariter pecorisque magistris:
  Effugiat stabulis noxa repulsa meis.
Siue sacro paui, sediue sub arbore sacra,
  Pabulaque e bustis inscia carpsit ouis:
Si nemus intraui uetitum, nostrisue fugatae
  Sunt oculis Nymphae semicaperque deus:
Si mea falx ramo lucum spoliauit opaco,
  Unde data est aegrae fiscina frondis oui:
Da ueniam culpae; nec, dum degrandinat, obsit
  Agresti fano supposuisse pecus.

(*b*) O Corydon, Corydon, secretum divitis ullum
Esse putas? Servi ut taceant, iumenta loquentur
Et canis et postes et marmora. Claude fenestras,
Vela tegant rimas, iunge ostia, tollite lumen
E medio, clamant omnes, prope nemo recumbat:
Quod tamen ad cantum galli facit ille secundi,
Proximus ante diem caupo sciet: audiet et quae
Finxerunt pariter librarius, archimagiri,
Carptores. Quod enim dubitant componere crimen
In dominos, quoties rumoribus ulciscuntur
Baltea? Nec deerit qui te per compita quaerat
Nolentem et miseram vinosus inebriet aurem.
Illos ergo roges, quidquid paullo ante petebas
A nobis; taceant illi: sed prodere malunt
Arcanum, quam surrepti potare Falerni,
Pro populo faciens quantum Saufeia bibebat.
Vivendum recte est cum propter plurima, tum his
Praecipue causis, ut linguas mancipiorum

Contemnas: nam lingua mali pars pessima servi.
Deterior tamen hic, qui liber non erit illis,
Quorum animas et farre suo custodit et aere.

(*c*) Jam de artificiis et quaestibus, qui liberales habendi, qui sordidi sint, haec fere accepimus. Primum improbantur ii quaestus, qui in odia hominum incurrunt, ut portitorum, ut faeneratorum. Illiberales autem et sordidi quaestus mercenariorum omnium, quorum operae, non quorum artes emuntur. Est enim in illis ipsa merces auctoramentum servitutis. Sordidi etiam putandi, qui mercantur a mercatoribus, quod statim vendant. Nihil enim proficiant, nisi admodum mentiantur. Nec vero quidquam turpius vanitate. Opificesque omnes in sordida arte versantur. Nec enim quidquam ingenuum potest habere officina. Minimeque artes hae probandae, quae ministrae sunt voluptatum:

Cetarii, lanii, coqui, fartores, piscatores,

ut ait Terentius. Adde huc, si placet, unguentarios, saltatores, totumque ludum talarium. Quibus autem artibus aut prudentia major inest, aut non mediocris utilitas quaeritur, ut medicina, ut architectura, ut doctrina rerum honestarum, hae sunt iis, quorum ordini conveniunt, honestae.

(*d*) Sub idem tempus de flamine Diali in locum Servi Maluginensis defuncti legendo, simul roganda nova lege disseruit Cæsar: nam patricios confarreatis parentibus genitos tres simul nominari, ex quis unus legeretur, vetusto more; neque adesse, ut olim, eam copiam, omissa confarreandi assuetudine aut inter paucos retenta (pluresque eius rei causas adferebat, potissimam penes incuriam virorum feminarumque; accedere ipsius caerimoniae difficultates, quae consulto vitarentur), et quod exiret e iure patrio qui id flamonium apisceretur quaeque in manum flaminis conveniret; ita medendum senatus decreto aut lege, sicut Augustus quaedam ex horrida illa antiquitate ad praesentem usum flexisset. Igitur tractatis religionibus placitum instituto flaminum nihil demutari; sed lata lex qua flaminica Dialis sacrorum causa in potestate viri, cetera promisco feminarum iure ageret. Et filius Maluginensis patri suffectus. Utque glisceret dignatio sacerdotum atque ipsis promptior animus foret ad capessendas

caerimonias, decretum Corneliae Virgini, quae in locum Scantiae capiebatur, sestertium viciens, et quotiens Augusta theatrum introisset, ut sedes inter Vestalium consideret.

LATIN AUTHORS.

HONOURS.

Translate and comment on extracts from Tacitus, Histories III., IV., V., Lucretius and Lucan.

LATIN GENERAL PAPER.

HONOURS.

Not more than SIX *questions to be answered.*

1. "In the Scipionic circle a new figure appeared of great originality and force, the founder of a kind of literature which, with justifiable pride, the Romans claimed as wholly native and original."

   Comment on this statement.

2. Compare Plautus and Terence as comic dramatists.

3. "Classical Latin poetry was written throughout in alien metres, to which indeed the language was adapted with immense dexterity, but which still remained foreign to its natural structure."

   Discuss this.

4. Compare the versification of Virgil with that of Lucan.

5. "It is in Quintilian that the reaction from the early imperial manner comes to a climax."

   Comment on this.

6. Describe the characteristics of Catullus.

7. "Lucretius turned from the fashion of his day to older and nobler models."

   Comment.

8 Discuss the view that Martial appealed strongly to all that was worst in Roman taste.

ARISTOTLE, POETICS, AND HISTORY OF GREEK DRAMA.

The same paper as that set in the Second Year Examination.

GREEK UNSEEN TRANSLATION.
HONOURS.

1. Τίς δ' ἦν οὕτως ἢ μισόδημος τότε ἢ μισαθήναιος, ὅστις ἐδυνήθη ἂν ἄτακτον αὐτὸν ὑπομεῖναι ἰδεῖν, ἡνίκα ἡ μὲν ἧττα καὶ τὸ γεγονὸς πάθος προσηγγέλλετο, ὀρθὴ δὲ ἦν ἡ πόλις ἐπὶ τοῖς συμβεβηκόσιν, αἱ δ' ἐλπίδες τῆς σωτηρίας τῷ δήμῳ ἐν τοῖς ὑπὲρ πεντήκοντα ἔτη γεγονόσι καθειστήκεσαν, ὁρᾶν δ' ἦν ἐπὶ μὲν τῶν θυρῶν γυναῖκας ἐλευθέρας περιφόβους κατεπτηχυίας καὶ πυνθανομένας εἰ ζῶσι, τὰς μὲν ὑπὲρ ἀνδρὸς, τὰς δ' ὑπὲρ πατρὸς, τὰς δ' ὑπὲρ ἀδελφῶν, ἀναξίως αὐτῶν καὶ τῆς πόλεως ὠρυομένας, τῶν δ' ἀνδρῶν τοὺς τοῖς σώμασιν ἀπειρηκότας καὶ τὰς ἡλικίας πρεσβυτέρους καὶ ὑπὸ τῶν νόμων τοῦ στρατεύεσθαι ἀφιεμένους ἰδεῖν ἦν καθ' ὅλην τὴν πόλιν ἐπὶ γήρως ὁδῷ περιφθειρομένους, διπλᾶ τὰ ἱμάτια ἐμπεπορπημένους; πολλῶν δὲ καὶ δεινῶν κατὰ τὴν πόλιν γιγνομένων, καὶ πάντων τῶν πολιτῶν τὰ μέγιστα ἠτυχηκότων, μάλιστ' ἄν τις ἤλγησε καὶ ἐδάκρυσεν ἐπὶ ταῖς τῆς πόλεως συμφοραῖς, ἡνίχ' ὁρᾶν ἦν τὸν δῆμον ψηφισάμενον τοὺς μὲν δούλους ἐλευθέρους, τοὺς δὲ ξένους Ἀθηναίους, τοὺς δ' ἀτίμους ἐπιτίμους· ὃς πρότερον ἐπὶ τῷ αὐτόχθων εἶναι καὶ ἐλεύθερος ἐσεμνύνετο. τοσαύτῃ δὲ ἡ πόλις ἐκέχρητο μεταβολῇ, ὥστε πρότερον μὲν ὑπὲρ τῆς τῶν ἄλλων Ἑλλήνων ἐλευθερίας ἀγωνίζεσθαι, ἐν δὲ τοῖς τότε χρόνοις ἀγαπᾶν ἐὰν ὑπὲρ τῆς αὐτῶν σωτηρίας ἀσφαλῶς δύνηται κινδυνεῦσαι, καὶ πρότερον μὲν πολλῆς χώρας τῶν βαρβάρων ἐπάρχειν, τότε δὲ πρὸς Μακεδόνας ὑπὲρ τῆς ἰδίας κινδυνεύειν· καὶ τὸν δῆμον ὃν πρότερον Λακεδαιμόνιοι καὶ Πελοποννήσιοι καὶ οἱ τὴν Ἀσίαν κατοικοῦντες Ἕλληνες βοηθὸν ἐπεκαλοῦντο, οὗτος ἐδεῖτο τῶν ἐξ Ἄνδρου καὶ Κέω καὶ Τροιζῆνος καὶ Ἐπιδαύρου ἐπικουρίαν αὐτῷ μεταπέμψασθαι.

2. καὶ ὅτε δὴ ἦν δεκαέτης ὁ παῖς, πρῆγμα ἐς αὐτὸν τοιόνδε γενόμενον ἐξέφηνέ μιν. ἔπαιζε ἐν τῇ κώμῃ ταύτῃ, ἐν τῇ ἦσαν καὶ αἱ βουκολίαι αὗται, ἔπαιζε δὲ μετ' ἄλλων ἡλίκων ἐν ὁδῷ. καὶ οἱ παῖδες παίζοντες εἵλοντο ἑωυτῶν βασιλέα εἶναι τοῦτον δὴ τὸν τοῦ βουκόλου ἐπίκλησιν παῖδα. ὁ δὲ αὐτῶν διέταξε τοὺς μὲν οἰκίας οἰκοδομέειν, τοὺς δὲ δορυφόρους εἶναι, τὸν δε κού τινα αὐτῶν ὀφθαλμὸν βασιλέος εἶναι, τῷ δέ τινι τὰς ἀγγελίας ἐσφέρειν ἐδίδου γέρας, ὡς ἑκάστῳ ἔργον προστάσσων. εἷς δὴ

τούτων τῶν παίδων συμπαίζων, ἐὼν Ἀρτεμβάρεω παῖς, ἀνδρὸς δοκίμου ἐν Μήδοισι, οὐ γὰρ δὴ ἐποίησε τὸ προσταχθὲν ἐκ τοῦ Κύρου, ἐκέλευε αὐτὸν τοὺς ἄλλους παῖδας διαλαβεῖν, πειθομένων δὲ τῶν παίδων ὁ Κῦρος τὸν παῖδα τρηχέως κάρτα περιέσπε μαστιγέων· ὁ δὲ ἐπείτε μετείθη τάχιστα, ὥς γε δὴ ἀνάξια ἑωυτοῦ παθὼν, μᾶλλόν τι περιημέκτεε, κατελθὼν δὲ ἐς πόλιν πρὸς τὸν πατέρα ἀποικτίζετο τῶν ὑπὸ Κύρου ἤντησε, λέγων δὲ οὐ Κύρον (οὐ γὰρ κω ἦν τοῦτο τοὔνομα), ἀλλὰ πρὸς τοῦ βουκόλου τοῦ Ἀστυάγεος παιδὸς. ὁ δὲ Ἀρτεμβάρης ὀργῇ, ὡς εἶχε, ἐλθὼν παρὰ τὸν Ἀστυάγεα καὶ ἅμα ἀγόμενος τὸν παῖδα, ἀνάρσια πρήγματα ἔφη πεπονθέναι, λέγων· Ὦ βασιλεῦ, ὑπὸ τοῦ σοῦ δούλου, βουκόλου δὲ παιδὸς, ὧδε περιυβρίσμεθα, δεικνὺς τοῦ παιδὸς τοὺς ὤμους.

3. ἐγὼ δ' ἀγῶνας μὲν κρατεῖν Ἑλληνικοὺς
πρῶτος θέλοιμ' ἄν, ἐν πόλει δὲ δεύτερος
σὺν τοῖς ἀρίστοις εὐτυχεῖν ἀεὶ φίλοις.
πράσσειν τε γὰρ πάρεστι, κίνδυνός τ' ἀπὼν
κρείσσω δίδωσι τῆς τυραννίδος χάριν.
ἓν οὐ λέλεκται τῶν ἐμῶν, τὰ δ' ἄλλ' ἔχεις·
εἰ μὲν γὰρ ἦν μοι μάρτυς οἷός εἰμ' ἐγὼ,
καὶ τῆσδ' ὁρώσης φέγγος ἠγωνιζόμην,
ἔργοις ἂν εἶδες τοὺς κακοὺς διεξιών.
νῦν δ' ὅρκιόν σοι Ζῆνα καὶ πέδον χθονὸς
ὄμνυμι τῶν σῶν μήποθ' ἅψασθαι γάμων
μηδ' ἂν θελῆσαι μηδ' ἂν ἔννοιαν λαβεῖν.
ἢ τἄρ' ὀλοίμην ἀκλεὴς ἀνώνυμος,
ἄπολις ἄοικος, φυγὰς ἀλητεύων χθόνα,
καὶ μήτε πόντος μήτε γῆ δέξαιτό μου
σάρκας θανόντος, εἰ κακὸς πέφυκ' ἀνήρ.
εἰ δ' ἥδε δειμαίνουσ' ἀπώλεσεν βίον
οὐκ οἶδ'. ἐμοὶ γὰρ οὐ θέμις πέρα λέγειν.
ἐσωφρόνησε δ' οὐκ ἔχουσα σωφρονεῖν,
ἡμεῖς δ' ἔχοντες οὐ καλῶς ἐχρώμεθα.

GREEK GENERAL PAPER.

HONOURS.

Not more than FIVE *questions to be attempted.*

1. What different views have been held as to the nature of punishment?
2. "Aristotle defends but reforms slavery." Comment on this.

3. "There is no valid reason why the physical production of the race should not receive infinitely more attention than it does." (*Mahaffy.*) What were the views of the Greeks on this subject? Discuss their justice.

4. "Aristotle declines to give a direct training to the intellect till he has first laid a solid foundation of character." Comment on this, comparing ancient and modern ideas on education.

5. Outline the generally accepted solution of the Homeric Question.

6. "It is no disparagement to the Epic dialect to say that, as it stands, it is no language, but a mixture of linguistically-incongruous forms, late, early, and primæval." (*Murray.*) Explain and illustrate.

7. "But only his own age could really stand Aristophanes The next century wanted more refinement and character-work, more plot and sentiment and sobriety." (*Murray.*) Comment on this.

8. Describe a Greek temple.

9. Criticise the portrait of the Greek despot as given in ancient literature.

10. "In the golden age of Athens the interests of the State and the individual were more perfectly identified than in any other State of antiquity." (*Fowler.*) Comment.

11. "Alexander looked upon Hellenic civilisation as the only existing cement capable of holding together the structure of a universal empire." Explain.

12. "Demosthenes is the true child of the City-state, but the child of its old age and decrepitude." Criticise his character as a statesman.

ENGLISH I.

HONOURS.

1. Translate a passage from the *Battle of Finnsburg*.

   Explain the passage, and attempt to reconstruct the story with which it deals, in connection with the corresponding matter in Beówulf.

2. Translate passages from *Beówulf.*

   Comment on the alteration here made in the reading of the MS., and, by references to the passages, give what you think the best explanation of the circumstances.

3. Translate, with explanatory notes, passages from *Beówulf.*

4. Explain passages from *Beówulf.*

5. "Beówulf is rather a collection of epic material than a full-developed epic unity."

   Discuss this.

6. Translate (at sight)—

   (*a*) þone wudu weardað wundrum fæger
   fugel feðrum strǫng, sē is Fēnix hāten.
   þǣr sē ānhaga eard bihealdeð,
   dēormōd drohtað; nǣfre him dēað sceǫðeð
   on þām willwǫnge, þenden woruld stǫndeð.
   Sē sceal þǣre sunnan sið bihealdan
   and ongēan cuman Godes cǫndelle,
   glædum gimme, georne bewitigan
   hwǫnne ūp cyme æðelast tungla
   ofer ȳðmęre ēstan līxan,
   Fæder fyrngeweorc frætwum blīcan,
   torht tācen Godes.

   (*b*) þā hīe ðā fela wucena sǣton on twā healfe þære ē, ǫnd sē cyng wæs west on Defnum wiþ þone sciphęre, þā wǣron hīe mid męteliēste gewǣgde, ǫnd hæfdon miclne dǣl þāra horsa freten, ǫnd þa ōþre wǣron hungre ācwolen. Þā ēodon hīe ūt tō ðǣm mǫnnum þe on ēasthealfe þǣre ē wīcodon, ǫnd him wiþ gefuhton; ǫnd þā Crīstnan hæfdon sige. Ond þǣr wearð Ordhēh cyninges þegn ofslægen, ǫnd ēac mǫnige ōþre cyninges þegnas; ǫnd þāra Dęniscra þǣr wearð swīþe mycel wæl gēslegen; ǫnd sē dǣl þe þǣr aweg cōm wurdon on flēame genęrede.

7. Render into Old English—

   Now the second of these monsters had a woman's form, and must be sought in a gloomy land, beneath the waters of a lake, in which other strange and terrible creatures also had their dwelling. When the hero entered it he was attacked and dragged to the bottom, where he fought the evil thing in a vast hall, whither the water did not come. Though his sword failed him, he was still victorious.

ENGLISH II.

HONOURS.

1. Render into Modern English, adding notes on obscure expressions, passages from *Piers Plowman.*

2. Discuss Langland's poem from the point of view of its allegorical form and content. What is its place in the English literature of the allegory?

3. "The verse of *Havelok* is an early specimen of an incoming type, the verse of *Piers* is a late specimen of a departing one; and this explains their respective peculiarities."

   Comment on this statement.

4. "The sources and development of the Beowulf and Havelok stories present analogies as well as contrasts."

   Discuss this.

5. Render into Modern English, with explanatory notes, passages from *Havelock.*

6. Examine the form taken by the words underlined in passages from *Havelock* and *Piers Plowman.*

FRENCH AND GERMAN.

The same papers as those set in the Second Year Examination.

SOLID GEOMETRY.

HONOURS.

1. Find the angle between two given straight lines in terms of their direction cosines.

   If (lmn), $(l'm'n')$, $(l''m''n'')$ are the direction cosines of three straight lines mutually at right angles, the straight line whose direction cosines are

$$\frac{l+l'+l''}{\sqrt{3}},\ \frac{m+m'+m''}{\sqrt{3}},\ \frac{n+n'+n''}{\sqrt{3}}$$

   makes equal angles with them all.

2. Find the equations to the straight line in a symmetrical form.

   Show that the straight line joining the points $(b,\ c,\ a)$ and $(c,\ a,\ b)$ is perpendicular to each of the lines

$$x=y=z \text{ and } \frac{x}{a}=\frac{y}{b}=\frac{z}{c}.$$

3. Show that the equations of any two straight lines may be put in the forms $y=c$, $z=x\tan\alpha$; $y=-c$, $z=-x\tan\alpha$.

Two planes through these lines intersect at right angles. Show that the line of intersection passes through the common curve of the cylinders $x^2+y^2=c^2$, $y^2+z^2=c^2$.

4. Find equations giving (1) the direction cosines, (2) the lengths of the principal axes of a conicoid.

Find the lengths and direction cosines of the principal axes of $5x^2+6y^2+7z^2+4yz-4xy=1$.

5. Show that the conditions that the conicoid

$$ax^2+by^2+cz^2+2fyz+2gzx+2hxy=d$$

should represent a surface of revolution are that

$$\frac{gh}{f}-a=\frac{hf}{g}-b=\frac{fg}{h}-c,$$

or, if $f=g=0$, that $(a-c)(b-c)=h^2$.

Find the direction cosines of the axis of revolution in the latter case.

6. Find the conditions that points $(x', y', z')(x'', y'', z'')(x''', y''', z''')$ on the ellipsoid

$$\frac{x^2}{a^2}+\frac{y^2}{b^2}+\frac{z^2}{c^2}=1$$

may be the extremities of conjugate diameters.

Prove that the equation to the plane through these three points can be written in the form

$$\frac{x(x'+x''+x''')}{a^2}+\frac{y(y'+y''+y''')}{b^2}+\frac{z(z'+z''+z''')}{c^2}=1.$$

7. All parallel sections of a conicoid are similar conics whose centres lie on a straight line.

The locus of the centres of plane sections of an ellipsoid which pass through the extremities of three conjugate diameters is a similar ellipsoid.

8. Show that the generating lines of the hyperbolic paraboloid $\frac{x^2}{a}-\frac{y^2}{b}=2z$ consist of two systems parallel respectively to the planes $\frac{x}{\sqrt{a}}=\pm\frac{y}{\sqrt{b}}$.

Show also that the angle between the generators at x, y, z to this surface is

$$\tan^{-1}\left[\sqrt{ab\left(1+\frac{x^2}{a^2}+\frac{y^2}{b^2}\right)}\Big/\left(z+\frac{a-b}{2}\right)\right]$$

9. What is meant by the principal normal and bi-normal at any point of a tortuous curve? Find their direction cosines in terms of differential coefficients of the coordinates with regard to the arc.

Find the equations of the normal and osculating planes of the curve in which $x=4a\cos^3\theta$, $y=4a\sin^3\theta$, $z=3a\cos^2\theta$.

10. Find the equation of the tangent plane at any point of the surface $F(x, y, z)=0$.

ANALYTICAL STATICS AND DYNAMICS.
HONOURS.

1. Prove that any system of forces acting on a rigid body can be reduced to a resultant force and a resultant couple, whose axis is in the direction of the force. Find the equations of the axis of the "wrench."

A force P acts along Ox, and a force Q along a generator of the cylinder

$$\frac{x^2}{a^2}+\frac{y^2}{b^2}=1.$$

Prove that the axis of the equivalent wrench lies on the surface

$$Q^4b^2x^2+(P^2+Q^2)^2a^2y^2+P^2Q^2b^2z^2-2PQ^3b^2xz-Q^4a^2b^2=0.$$

2. Find the Cartesian equation of the curve formed by a uniform string hanging under its own weight, and find the tension at any point.

A length l, of a uniform string of density 2ρ is joined with a length l_2 of a uniform string of density ρ so as to form one string. The ends of the compound string are fastened to two points in a horizontal line, and the system hangs with the junction of the two strings at its lowest point. If x be the depth of this point below the points of support, prove that $2l_1^2=l_2^2+x^2$.

3. Find the radial and transverse components of the acceleration of a particle moving in one plane, and deduce the components parallel to two rectangular axes revolving about the origin with angular velocity ω.

If the axes of x and y rotate with angular velocities ω_1 and ω_2 respectively, and ϕ is the angle between them, prove that the component velocities of the point (x, y) parallel to these axes are

$$\dot{x}-x\omega_1\cot\phi-y\omega_2\operatorname{cosec}\phi \text{ and } \dot{y}+x\omega_1\operatorname{cosec}\phi+y\omega_2\cot\phi.$$

4. Prove that the tangential and normal accelerations of a particle describing any orbit are respectively

$$v\frac{dv}{ds} \text{ and } \frac{v^2}{\rho}.$$

A particle is projected horizontally with velocity V in a medium in which the resistance is constant, and equal to the weight of the particle. Prove that, when the tangent to its path makes an angle ϕ with the horizon, its velocity is $\dfrac{V}{1+\sin\phi}$.

5. Enunciate, and prove Kepler's Laws of Planetary Motion.

What correction has to be made in the third law, when the masses of both the sun and the planet are taken into consideration?

6. Prove that the motion of a rigid body relative to its centre of mass is the same as it would be if that point were fixed, and the impressed forces were unchanged.

A wheel of radius a, having its centre of mass G at a distance c from its centre O, is placed at rest with its plane vertical and OG horizontal on a rough horizontal plane. Prove that the wheel will begin to roll without slipping, provided the coefficient of friction is not less than $ac/(a^2+k^2)$, where k is the radius of gyration about G.

7. Two equal uniform rods AB, BC are freely jointed at B, and the end A is fixed. The system is held in such a manner that A and C are in the same horizontal line, and the angle B is a right angle; C is then released. Find the initial angular accelerations of the rods, and prove that the initial reaction at B is $\frac{W}{8}\sqrt{\frac{5}{2}}$, where W is the weight of a rod.

8. Three equal uniform rods AB, BC, CD of length $2a$ are freely jointed at B and C, and suspended from points A and D

in the same horizontal straight line at a distance $2a$ apart. Show that, when the rods move in a vertical plane, the length of the simple equivalent pendulum is $\frac{5a}{3}$.

9. Find the angular momenta of a rigid body about three rectangular axes in terms of its angular velocities about these axes.

A uniform square lamina ABCD is rotating round the diagonal BD. Suddenly the corner A is fixed. Prove that the initial velocity of the centre of the square is $\frac{1}{7}$ of that of A before it was fixed.

SPHERICAL TRIGONOMETRY AND ASTRONOMY.

HONOURS.

1. What is meant by the polar triangle of a spherical triangle? Prove that the relations between the parts of a triangle and its polar are reciprocal.

If A′B′C′ is the polar triangle of ABC, show that AA′, BB′, and CC′ are concurrent at the orthocentre of the triangle.

2. Prove Napier's formulae for $\tan \frac{1}{2}(A+B)$ and $\tan \frac{1}{2}(A-B)$.

AB is an arc of length c, x is the pole of AB, and C, D points in XA and XB. Show that the area of the quadrilateral ABCD is Er^2 where

$$\tan \tfrac{1}{2}E = \frac{\sin \frac{1}{2}(a+b)}{\cos \frac{1}{2}(a-b)} \tan \frac{c}{2}$$

a, b being the sides AC and BD.

3. ABC is an equilateral triangle of which the spherical excess is equal to one side. Show that the sides and angles must be right angles.

4. In the figure of question (1) AA′, BB′, and CC′ meet the sides in D, E and F.

Show that (i.) $\sin a \,.\, \sin AD = \text{constant}$.

(ii.) $\cos a \,.\, \cos AH = \text{constant}$.

H being the orthocentre of the triangle.

What are the corresponding theorems in the case of a plane triangle?

5. Find an expression for the inradius of a spherical triangle. Show that the incentre of a triangle is the circumcentre of the polar triangle, and the inradius the complement of the radius of this circumcircle.

6. Show that the rotation of the earth on its axis and its revolution round the sun satisfactorily explain the phenomena of day and night, and the changing aspect of the night sky. How is the varying length of daylight explained?

7. The hour angle of a star at rising is h, and when moving vertically is h_1. Show that the latitude of the place is

$$\tan^{-1}\sqrt{-\cos h \,.\, \cos h_1},$$

and the declination of the star

$$\tan^{-1}\sqrt{-\cos h \,.\, \sec h_1}.$$

8. Show that a star which rises and sets can never appear to move in a vertical plane to an observer whose latitude is greater than 45°.

9. At a certain time of year at a place in lat. 33° S., the R.A. of the meridian is 23 h. 56 m. 56 sec. The R.A. and declination of Sirius are 6 h. 40 m. and 16° 35′ S. How long will Sirius be above the horizon, and when and where would you look for it when rising?

10. What is parallax? Prove the formula $p = \Pi \sin z$.
If the annual parallax of a star in longitude is equal to the parallax in latitude, show that

$$2\tan(\text{Sun's longitude} - \text{Star's longitude}) + \sin(2\ \text{latitude}) = 0.$$

11. If m, s are the moon's and sun's hourly motion in longitude, and p the moon's hourly motion in latitude, and λ the moon's latitude in opposition, show that the time of mid eclipse from opposition is

$$\frac{p\lambda}{(m-s)^2 + p^2}.$$

INTEGRAL CALCULUS AND DIFFERENTIAL EQUATIONS. HONOURS.

1. Define the Eulerian Integrals $B(l, m)$ and $\Gamma(n)$.
Shew that

$$B(l, m) = \frac{\Gamma(l) \,.\, \Gamma(m)}{\Gamma(l+m)},$$

also that all values of $\Gamma(n)$, when n is positive, may be expressed in terms of $\Gamma(n)$ where n lies between 0 and $\frac{1}{2}$.

Show that

$$B(l, m) = \frac{(l-1)!\,(m-1)!}{(l+m-1)!}$$

provided l, m are positive whole numbers.

2. Prove that under certain circumstances it is permissible to differentiate through the integral sign.

Show that $\displaystyle\int_0^\infty \frac{e^{-ax}\sin rx}{x}\,dx = \tan^{-1}\frac{r}{a}$

3. Prove that

$$\int_0^{\frac{\pi}{4}} \log(1+\tan\phi)\,d\phi = \frac{\pi}{8}\log 2$$

$$\int_0^\infty e^{-a^2x^2}\cos 2bx\,dx = \frac{\sqrt{\pi}}{2a}e^{-\frac{b^2}{a^2}}$$

4. Show how the Integral Calculus may be used to find the mean value of a function of x for indefinitely small changes in x.

What is the mean value of chords of a circle drawn through a point in the circumference?

5. The variables u, v, w, x, y, z are connected by three independent equations. Show how to express the integral $\int\int\int F(x, y, z)\,dx\,dy\,dz$ as an integral with respect to u, v, w, and show how the limits are to be determined.

6. Define a singular solution of a differential equation of the first degree, and show how it may be derived from the differential equation.

Find the complete primitive and the singular solution of the equation

$$(y-xp)^2(1+p^2) = c^2p^2.$$

Investigate the geometrical relation which exists between the complete primitive and the singular solution.

7. Solve the simultaneous equations

$$\frac{dx}{2x+3y-5z+1} = \frac{dy}{4x-y-z+2} = \frac{dz}{7x-2z+5}.$$

8. Show how to find a complete primitive of a partial differential equation of the form

$$f(x, y, z, p, q)=0.$$

Solve $x^2p^2+y(q^2-1)=0.$

$$xp^3+yq^3=z.$$

9. Integrate the equations

(i.) $r^2-t^2+\dfrac{4p}{x+y}=0.$

(ii.) $q(1+q)r+p(1+p)t=(p+q+2pq)s.$

HYDROSTATICS AND HYDRODYNAMICS.

HONOURS.

1. *Write* down the equations of equilibrium of a fluid under the action of forces whose components parallel to the axes are X, Y, and Z; and find the necessary and sufficient condition that this system of forces should be capable of keeping a fluid in equilibrium.

Prove that the surfaces of equal pressure when the component forces at any point (x, y, z) are $y(y+z)$, $z(z+x)$ and $y(y-x)$ are the hyperbolic paraboloids

$$y(x+z)=c(y+z).$$

2. What is meant by the Centre of Pressure of any plane area immersed in a fluid? Find it in the case of a semi-circle

(i.) when the diameter is in the surface;

(ii.) when the diameter is vertical and one of its extremities in the surface.

3. Obtain the conditions of equilibrium of a solid body floating in a homogeneous liquid.

A hollow hemispherical shell has a heavy particle fixed to its rim, and floats in water with the particle just above the surface, and with the plane of the rim inclined at an angle of 45° to the surface. Show that the weight of the hemisphere is to the weight of the water which it would contain as $4\sqrt{2}-5$ to $6\sqrt{2}$.

4. What is meant by the metacentre of a body? Find its position in the case of a solid cone floating with its axis

vertical and vertex downwards, and deduce that the equilibrium is stable or unstable as

$$\frac{\sigma}{\rho} \begin{matrix} > \\ < \end{matrix} (\cos a)^6$$

a being the semi-vertical angle, and σ, ρ the densities of the cone and fluid respectively.

5. Obtain the equation of continuity in an incompressible fluid, and show that in irrotational motion in such a fluid

$$\frac{p}{\rho}=\dot{\phi}-V-\tfrac{1}{2}q^2+F(t)$$

where $u=-\dfrac{\delta\phi}{\delta x}$

$$v=-\frac{\delta\phi}{\delta y}$$

$$w=-\frac{\delta\phi}{\delta z}$$

and $X=-\dfrac{\delta V}{\delta x}$

$$Y=-\frac{\delta V}{\delta y}$$

$$Z=-\frac{\delta V}{\delta z}$$

6. An infinite cylinder is moving with velocity V in a direction perpendicular to its axis in an infinite liquid. Find the condition which the Current Function ψ of this irrotational motion must satisfy at the boundary, taking the velocity V in the direction of the axis of x.

In the case of a circular cylinder show that

$$\phi+i\psi=\frac{Va^2}{r}(\cos\theta-i\sin\theta).$$

7. In the two dimensional irrotational motion of a liquid streaming past an elliptic cylinder

$$\frac{x^2}{a^2}+\frac{y^2}{b^2}=1$$

the velocity at infinity being parallel to the axis of x and equal to V, prove that

$$\phi+i\psi=-V(a+b)\cosh(\xi-a+i\eta)$$

where

$$x+iy=c\cosh(\xi+i\eta),$$

and the ellipse is given by

$$\xi=a.$$

Also show that the velocity at any point in the liquid is given by

$$q^2=V^2\frac{a+b}{a-b}\;\frac{\sinh^2(\xi-a)+\sin^2\eta}{\sinh^2\xi+\sin^2\eta}.$$

8. Obtain the velocity potential for the irrotational motion when a sphere of density ρ is moving in an infinite liquid of density σ with velocity V, the liquid being at rest at infinity.

Hence show that when the sphere is descending vertically under gravity, its acceleration is constant and equal to

$$g\frac{\rho-\sigma}{\rho+\frac{1}{2}\sigma}.$$

LOGIC AND MENTAL PHILOSOPHY.

HONOURS II.

Not more than TWO *questions to be selected from each Section.*

SECTION A.

1. Sketch briefly the different main theories of the relation of psychic states to physical states.
2. Discuss the view according to which feelings are the most important factors in psychic life.
3. Describe briefly the way in which consciousness developes, and point out some of the defects of the association theory.
4. "If we oppose the cosmic process to the moral process the latter must in the end inevitably be sacrificed." Discuss this criticism with reference to Huxley's opposition of the moral to the cosmic order of the universe.

SECTION B.

5. How does Green seek to justify his description of the self as a free cause?
6. "No really external authority can impose a duty." (*Green.*) Discuss this in relation to the ethical and social ideal of socialism.

7. Discuss the practical value of utilitarianism as compared with that of the theory of the good as human perfection.

8. Green's doctrine of a universal consciousness "does not imply two minds, but that two conceptions are needed for the understanding of the one mind." Explain and illustrate from Green's argument.

SECTION C.

9. Explain and illustrate (*a*) Spencer's distinction between pro-ethical and ethical sentiment, (*b*) his application of the "primary process of evolution" to the "aggregate of the conceptions constituting ethics."

10. How does Spencer reach the conception of an "absolute ethics"? Discuss the value of the conception.

11. "Pleasure is as much a necessary form of moral intuition as space is a necessary form of intellectual intuition." (*Spencer.*) Discuss this statement, with special reference to Spencer's ethical conclusions.

12. Write an expository or critical note on each of the following quotations from Spencer:—

(*a*) "Although primarily altruism is dependent on egoism, yet secondarily egoism is dependent on altruism."

(*b*) "Political obedience is a purely transitional virtue."

(*c*) From the point of view of absolute ethics, stimulants of every kind must be reprobated."

(*d*) "The moral sense doctrine in its original form, while not true, adumbrates a truth, and a much higher truth."

HISTORY IV.

HONOURS.

You are recommended to answer SEVEN *questions, and no more.*

1. "It was because the French aristocracy resisted Reform in 1783 that they were unable to resist revolution in 1789. It was because they clung too long to odious exemptions and distinctions that they were at last unable to save their lands, their mansions, their heads. They would not endure Turgot, and they had to endure Robespierre." (*Macaulay.*)

Explain and discuss.

2. "It is often easy to destroy Institutions. It is still easier to create new ones. But the difficulty is to make these new ones work."

   Show how the course of the French Revolution illustrated these remarks.

3. "As in the American war France avenges on England her expulsion from the New World, so under Napoleon she makes Titanic efforts to recover her lost place there. This, indeed, is Napoleon's fixed view with regard to England. He sees in England never the island, the European State, but always the world-Empire, the network of dependencies and colonies, and islands covering every sea"

   Discuss this aspect of Napoleon's policy.

4. What advantages, apart from foreign conquests, did the rule of Napoleon I. secure for France?

5. Trace the policy of the Czar Alexander I. during the period from 1815 to his death.

6. Explain the causes of the Revolution of 1830. What were the chief consequences of this Revolution in France and in Europe?

7. Describe shortly the movement in favour of national independence and unity which took place in Italy in 1848-1849.

8. "Had Napoleon III.'s reign ended in 1863 he would probably have left behind him in popular memory the name of a great statesman." Discuss.

9. Give some account of the events which led to the war between Russia and Turkey in 1877. Explain the policy of the British Government in respect to the war, and to the peace by which it was concluded.

10. Compare the statesmanship of Bismarck with that of Stein.

11. What are the chief difficulties and dangers which beset the rulers of the Austrian Empire at the present time?

M.A. EXAMINATION.

PURE MATHEMATICS.
HONOURS.
PAPER I.

1. What is meant by the uniform convergence of the Infinite Series—

$$u_1(x)+u_2(x)+\ldots$$

where $u_1(x)$, . . are continuous functions of the real variable x.

Prove—

(i.) That if this series is uniformly convergent in the interval $a \leqq x \leqq b$, its sum $f(x)$ is a continuous function of x in that interval; and

(ii.) That $\int_{x_0}^{x_1} f(x)dx = \int_{x_0}^{x_1} u_1(x)dx + \ldots$

where $a \leqq x_0 < x_1 \leqq b$.

2. Discuss the nature of the convergence of the series—

(i.) $1+x+x^2+\ldots \quad -l < x \leqq 1$, l being some definite proper fraction;

(ii.) $\frac{x}{x+1}+\frac{x}{(x+1)(2x+1)}+\ldots$;

(iii.) $x^2+\frac{x^2}{1+x^2}+\ldots \quad +\frac{x^2}{(1+x^2)^n}+$

3. Define the term Analytic Function, and prove that

(i.) If $f(z)$ is an analytic function regular at all points in the interior of a contour C

$$\int f(z)dz=0$$

where the integration is taken round the contour: and that

(ii.) The value of $f(z)$ at $z=a$ (a point inside C) is given by

$$f(a)=\frac{1}{2i\pi}\int\frac{f(z)}{z-a}dz;$$

and that

(iii.) $f'(z)$ is also an analytic function, and its value at $z=a$ is given by

$$f'(a)=\frac{1}{2i\pi}\int\frac{f(z)}{(z-a)^2}dz.$$

Hence prove Taylor's and Laurent's Theorems.

4. Apply Cauchy's Theory of Residues to the evaluation of the following integrals—

(i.) $\displaystyle\int_{-\infty}^{\infty}\frac{\cos x}{a^2+x^2}dx,$

(ii.) $\displaystyle\int_{-\infty}^{\infty}\frac{\sin x}{a^2+x^2}dx,$

(iii.) $\displaystyle\int_{0}^{\infty}\frac{x^{a-1}}{1+x}dx,$

(iv.) $\displaystyle\int_{0}^{\infty}\frac{x^{a-1}}{1-x}dx.$

where $0<a<1$ in (iii.) and (iv.)

5. Prove that when $f(x)$ is a single valued function of x, which in the interval $-\pi\leqq x\leqq\pi$ has only a finite number of maxima or minima or points of discontinuity, and which, if it becomes infinite in this interval, does so only in a finite number of points, and in such a way that $\int f(x)dx$ converges there, then the series—

$$a_0+a_1\cos x+\text{—}$$
$$+b_1\sin x+\text{——}$$

where $$a_0=\frac{1}{2\pi}\int_{-\pi}^{\pi} f(x')dx',$$

$$a_n=\frac{1}{\pi}\int_{-\pi}^{\pi} f(x')\cos nx'dx',$$

$$b_n=\frac{1}{\pi}\int_{-\pi}^{\pi} f(x')\sin nx'dx',$$

has the value

$$\tfrac{1}{2}(f(x+0)+f(x-0)) \ldots -\pi<x<\pi,$$

and

$$\tfrac{1}{2}(f(-\pi+0)+f(\pi-0)) \text{ at } x=\pm\pi.$$

Deduce from this theorem the Sine Series and the Cosine Series for the expansion in the interval $0<x<\pi$, and write down the sums of these series for $x=0$ and $x=\pi$.

6. Find y a function of x, such that when $0<x<\frac{l}{2}$, $y=\frac{l}{4}-x$, and when $\frac{l}{2}<x<l$ $y=x-\frac{3}{4}l$, in the form

$$y=\frac{2l}{\pi^2}\left(\cos\frac{2\pi}{l}x+\frac{1}{9}\cos\frac{3\pi x}{l}+\frac{1}{25}\cos\frac{10\pi x}{l}+\ldots\right)$$

7, Obtain the equation of squared differences of the cubic equation

$$a_0x^3+3a_1x^2+3a_2x+a_3=0,$$

and hence obtain criteria in terms of the coefficients for the nature of the roots of this equation.

8. Explain the principle of Horner's Method of approximating to the roots of an algebraical equation. Apply the method to find to three decimal places the fifth root of 20.

PURE MATHEMATICS.
HONOURS.
PAPER II.

1. Show that if a root of the cubic equation

$$4a^3\lambda^3-a\lambda(ae-4bd+3c^2)+(ace+2bcd-ad^2-eb^2-c^3)=0$$

be known, then two quadratic factors of the quartic

$$ax^4+4bx^3+6cx^2+4dx+e$$

can be found.

2. State and prove Sturm's Theorem for finding the position of the real roots of an algebraical equation.

Find the number and situation of the real roots of the equation

$$x^3-7x+7=0.$$

3. Prove that the infinite product

$$\frac{1}{z}\prod_{n=1}^{\infty}\frac{\left(1+\frac{1}{n}\right)^z}{1+\frac{z}{n}}=\Gamma(z)$$

is absolutely convergent for all values of z, except negative integral values.

Also, obtain two expressions for $\Gamma(z)$ as a definite integral, of which one will hold for all values of z, and the second only for values in which the real part of z is positive.

4. Define the Legendre Coefficient $P_n(z)$ for n a positive integer, and prove that it satisfies the differential equation

$$(1-z^2)\frac{d^2y}{dz^2}-2z\frac{dy}{dz}+n(n+1)y=0.$$

Extend your definition to the case of the Legendre Function where n need not be a positive integer, and prove that

$$nP_n(z)-(2n-1)zP_{n-1}(z)+(n-1)P_{n-2}(z)=0.$$

5. Defining the Bessel's Coefficient of the nth order (n a positive or negative integer) by the integral

$$\frac{1}{2\pi i}\int u^{-n-1}e^{\frac{z}{2}\left(x-\frac{1}{u}\right)}du$$

the integral being taken round any simple contour in the u— plane enclosing the point $u=0$, prove that

(i.) $J_n(z) = \sum_{r=0}^{\infty} \frac{(-1)^r z^{n+2r}}{2^{n+2r} r! \Gamma(n+r+1)}$

and that

(ii.) $J_n(z)$ is a solution of the differential equation

$$\frac{d^2y}{dz^2} + \frac{1}{z}\frac{dy}{dz} + \left(1 - \frac{n^2}{z^2}\right)y = 0.$$

Also, extend your definition to the case in which n is not an integer, obtaining the expression for the Bessel's Function of the nth order in the form

$$\frac{1}{2\pi i}\left(\frac{z}{2}\right)^n \int t^{-n-1} e^{t - \frac{z^2}{4t}} dt$$

over a certain contour.

6. Prove that if $J_n(a\xi) = 0$ and $J_n(\beta\xi) = 0$

$$\int_0^{\xi} x J_n(ax) J_n(\beta x) dx = 0$$

$$\int_0^{\xi} x \{J_n(ax)\}^2 dx = \tfrac{1}{2}\xi^2 \{J_{n+1}(a\xi)\}^2$$

Hence prove that the roots of $J_n(x) = 0$ other than zero are all real and unequal.

7. Defining the elliptic function on the Weierstrassian method, prove its periodicity, and obtain an expression for it as a Definite Integral.

8. Express

$$\int_{x_0}^{x_1} \frac{dx}{\sqrt{ax^4 + 4bx^3 + 6cx^2 + 4dx + e}}$$

in terms of the Weierstrassian function.

9. Prove the addition formula for $sn(u+v)$, and show that

(i.) $\frac{d}{du_1} sn(u_1+u_2) = cn(u_1+u_2) dn(u_1+u_2)$,

(ii.) $cn^2(u_1+u_2) + sn^2(u_1+u_2) = 1$.

10. Show that if $\alpha > x > \beta > \gamma$ the substitutions

$$x-\gamma=(\alpha-\gamma)dn^2u$$
$$x-\gamma=(\beta-\gamma)dn^{-2}v$$

where $\quad k^2=(\alpha-\beta)(\alpha-\gamma)^{-1}$

reduce the integrals

$$\int_x^\alpha \frac{dx}{\sqrt{(\alpha-x)(x-\beta)(x-\gamma)}}$$

and

$$\int_\beta^x \frac{dx}{\sqrt{(\alpha-x)(x-\beta)(x-\gamma)}}$$

respectively to the forms $2u(\alpha-\gamma)^{-\frac{1}{2}}$ and $2v(\alpha-\gamma)^{-}$.

APPLIED MATHEMATICS.

HONOURS.

PAPER I.

1. State D'Alembert's Principle, and show that for a rigid body moving in two dimensions, the equations of motion can be written in the form

$$M\ddot{x}=X,\ M\ddot{y}=Y,\ Mk^2\ddot{\theta}=L.$$

A uniform smooth cube of mass M and edge $2a$ rests symmetrically on two shelves each of breadth b and mass m and attached to walls at distance $2c$ apart. Show that if one of the shelves gives way and begins to turn about the edge where it is attached to the wall, the initial angular acceleration of the cube will be

$$\frac{Mg(c-a)^2(c-b)+\frac{1}{2}mgb(c-a)(c-b+a)}{M(c-a)^2[k^2+(c-b)^2]+I(c-b+a)^2}$$

where Mk^2 and I are respectively the moments of inertia of the cube about its centre and of the shelf about its edge.

2. A body at rest with one point O fixed in space is acted on by an impulsive couple; find the initial axis of rotation and investigate the conditions in order that this axis should be a permanent axis of rotation.

3. Prove Euler's Geometrical Equations $\omega_1 = \dot{\theta}\sin\phi - \dot{\psi}\sin\theta\cos\phi$,

$$\omega_2 = \dot{\theta}\cos\phi + \dot{\psi}\sin\theta\sin\phi, \quad \omega_3 = \dot{\psi}\cos\theta + \dot{\phi}.$$

A thin uniform circular disc of radius a rolls on a perfectly rough horizontal table, the inclination of its plane to that of a table being θ, the azimuth of the radius to the point of contact being ψ and the angular velocity about its axis being ω, obtain the following equation of motion.

$$2\omega\dot{\theta} - \sin\theta\dot{\psi} - 2\cos\theta.\dot{\theta}.\dot{\psi} = 0$$

$$5\ddot{\theta} - \sin\theta\cos\theta\dot{\psi}^2 + 6\omega\sin\theta\dot{\psi} = -4\frac{g}{a}\cos\theta$$

$$3\dot{\omega} = 2\sin\theta.\dot{\theta}.\dot{\psi}.$$

4. If a homogeneous sphere roll on a perfectly rough fixed plane under the action of any forces whose resultant passes through the centre, the motion of the centre is the same as if the plane were smooth and all the forces were reduced to five-sevenths of their former values.

5. Find the potential and attraction of a solid homogeneous sphere at an internal point, and at an external point.

A solid homogeneous sphere is divided by a plane through its centre into two hemispheres. These being placed with their plane face coincident, shew that the force required to pull them apart is $\frac{3}{16}\frac{M^2}{a^2}$, where M is the mass of the sphere and a its radius.

6. Find the potential and the components of the attraction of a solid homogeneous ellipsoid at any external point P′ whose coordinates are $(\xi'\eta'\zeta')$.

7. Find the coordinates of the centre of pressure of a plane area immersed in heavy homogeneous liquid.

A closed cubical box is just full of liquid and the whole rotates like a rigid body round a vertical axis through the centre parallel to one of its edges. Show that the centres of pressure of the vertical forces are at a depth $\dfrac{a}{3+\dfrac{2a\omega^2}{g}}$ below the centre of the cube, where ω is the angular velocity and $2a$ the length of an edge.

8. An infinite elliptic cylinder with semi-axes a and b is rotating round its axis with angular velocity ω in an infinite liquid of density ρ, which is at rest at infinity. Show that the stream function is

$$\tfrac{1}{4}\omega(a+b)^2\, e^{-2\xi}\cos 2\eta,$$

when ξ, η are connected with the coordinates of a point by the equation

$$x = c\cosh\xi\cos y$$
$$y = c\sinh\xi\sin y$$
$$c = \sqrt{a^2-b^2}.$$

APPLIED MATHEMATICS.

PAPER II.

HONOURS.

1. Establish the equation of potential

$$\frac{\delta^2 V}{\delta x^2}+\frac{\delta^2 V}{\delta y^2}+\frac{\delta^2 V}{\delta z^2}+4\pi\rho=0$$

What distribution of matter will produce potential

$$\frac{M}{a}\left(1-\frac{x}{3a}\right),\ \frac{M}{r}\left(1-\frac{ax}{3r^2}\right)$$

according as $r \lessgtr a$?

2. Obtain the velocity potential and the stream function due to one or more sources of given strengths in an infinite liquid the motion being two dimensional. Explain how to extend your results to the case when there is a single plane boundary.

Between the two boundaries $\theta = \pm\frac{\pi}{6}$ there is a two dimensional source at the point $(r=c,\ \theta=a)$ and a sink at the origin, absorbing water at the same rate as the source produces it. Find the stream function and show that one of the stream lines is a part of the curve

$$r^3 \sin 3a = c^3 \sin 3\theta.$$

3. Discuss the problem of the propagation of two dimensional waves of length $\frac{2\pi}{m}$ in a liquid of given depth, and also at the surface of separation of two liquids which are of densities $(\rho, \rho')(\rho > \rho')$ and depths h, h', and which are confined between two fixed horizontal planes.

Prove that if the potential energy is reckoned zero in the position of equilibrium, the total energy of the lower liquid is to that of the upper in the ratio

$$\frac{\rho\{(2\rho-\rho')\coth mh + \rho'\coth mh'\}}{\rho'\{(\rho-2\rho')\coth mh' - \rho\coth mh\}}.$$

4. Investigate Lagrange's equations of motion of a system of rigid bodies referred to generalised coordinates, namely equations of the type

$$\frac{d}{dt}\frac{\delta T}{\delta\theta'} - \frac{\delta T}{\delta\theta} = \frac{\delta U}{\delta\theta}.$$

Deduce the equation of energy from Lagrange's equations.

5. A symmetrical top spins with its axis vertical, its peg resting in a smooth socket. Find the least spin consistent with stability, and investigate the small oscillations about this position.

6. A thin circular cylinder of mass M and radius b rests on a perfectly rough horizontal plane, and inside it is placed a perfectly rough sphere of mass m and radius a. If this system is disturbed in a plane perpendicular to the generators of the cylinder, find the equations of finite motion and deduce two first integrals of them. If the motion is small, prove that the length of the simple equivalent pendulum is

$$14M(b-a) \Big/ (10M+7m).$$

7. Prove that the oscillations of Watt's Governor between the inclinations α and β to the vertical, when constrained to revolve with constant angular velocity ω, are given by

$$\tan\frac{\theta}{2}=\tan\frac{\alpha}{2}\,\mathrm{dn}\,(\mathrm{nt},\mathrm{k})$$

$$\text{with } k'=\frac{\tan\frac{\beta}{2}}{\tan\frac{\alpha}{2}}$$

where θ denotes the inclination of an arm to the vertical axis at the time t.

8. Taking the case of question (5), when the axis of the top makes an angle θ with the vertical, discuss the dynamical problem with the aid of elliptic functions.

*FACULTY OF LAW.

INTERMEDIATE EXAMINATION FOR THE DEGREE OF LL.B.

ROMAN LAW.

Candidates are not to attempt more than EIGHT *questions, but these should include Nos. I., VI. and XI.*

I. Translate and comment BRIEFLY on each of the following passages from the text of the Institutes:—

(1) *Nam quarundam nuptiis abstinendum est. . . . . Inter eas quoque personas, quae ex transverso gradu cognationis junguntur, est quaedam similis observatio, sed non tanta* (I, 10, 1-2).

(2) *Si quis velit vicino aliquod jus constituere, pactionibus atque stipulationibus id efficere debet. Potest etiam in testamento quis heredem suum damnare, ne altius tollat, ne luminibus aedium vicini officiat; vel ut patiatur eum tignum in parietem immittere vel stillicidium habere* (II, 3, 4).

(3) *Ex huiusmodi obligationibus et stipulantibus solidum singulis debetur et promitteutes singuli in solidum tenentur. In utraque tamen obligatione una res vertatur: et vel alter debitum accipiendo vel alter solvendo omnium peremit obligationem et omnes liberat* (III, 16, 1).

(4) *De illa sane conventione quaesitum est, si Titius et Seius inter se pacti sunt ut ad Titium lucri duae partes pertineant, damni tertia, ad Seium duae partes damni, lucri tertia, an rata debet haberi conventio* (III, 25, 2).

(5) *Sed si non corpore damnum fuerit datum neque corpus laesum fuerit, sed alio modo damnum alicui contigit, cum non sufficit neque directa neque utilis Aquilia, placuit eum qui obnoxius fuerit in factum actione teneri* (IV, 3, 16).

* The time allowed for each paper is three hours, except where otherwise stated.

II. Contrast, briefly, the constitutional modes of legislation, under the Republic (*circ.* 50 B.C.) and under the Empire (*circ.* 350 A.D.). What other sources of new law existed at the latter of these two periods?

III. In what different ways might a child fall under the *patria potestas* in the time of Justinian? A is a *filius familias* in the *potestas* of B. C, a comrade, leaves A his property by will. To whom will the property belong?

IV. Examine the requisites of *specificatio* as a mode of acquiring property in Roman Law.

A builds a house on his own ground, using materials which he had bought in good faith from B, but which really belonged to C. Advise C as to his rights and remedies.

V. A, a widower, has three children: B, an emancipated son who has been convicted of crime; C, a son still in *potestate;* and D, an adopted daughter. He desires to institute E, a nephew, as heir, but to leave the bulk of his property in trust for F, the daughter of E. Advise A as to what dispositions he should make in order to render the will effective, under the law as finally settled by Justinian.

VI. A, a testator, in making his will, in the time of Justinian, bequeaths the following legacies:—(1) To B a valuable picture (which the testator however subsequently sells to C); (2) to D a farm (which the testator subsequently mortgages to E); (3) to F a horse (which, as it turns out, belongs to G); and (4) to H "my slave *Stichus*" (the fact being that the testator had no slave of that name). Advise the legatee in each case as to his rights, in the event of A's death, giving reasons for your opinion.

VII. What theories have been put forward as to the origin of "*stipulatio,*" and as to its connection with other contracts known to Roman Law?

VIII. A owes money to B, the repayment of which is guaranteed by C and D as *fidejussores.* B sues C for the whole amount. Advise C as to his rights as regards B, A, and D, under the Roman Law as it obtained in the time of Justinian.

IX. Explain, and illustrate, briefly, the distinction between *Mandatum* and *Negotiorum gestio.*

X. Discuss the rights and liabilities of the parties in each of the following cases :—

(1) During A's absence his slave *Stichus* orders certain goods from a shopkeeper, B, for the supply of the household. The goods are consumed; but on his return A refuses to pay for them.

(2) A, seeing in B's field some cattle which he believes to be his own, forcibly seizes them and carries them off.

(3) A owns a valuable dog, which is attacked and killed in the street by another dog, belonging to B.

XI. Write a SHORT explanatory note on each of the following:—(1) The *Novellae;* (2) *Curatela;* (3) *Donatio mortis causâ;* (4) *Cretio vulgaris;* (5) *Substitutio exemplaris;* (6) *Clausula codicillaris;* (7) *Condictio indebiti;* (8) *Diligentia mera;* (9) *Injuria;* and (10) *Obligatio quasi ex delicto.*

CONSTITUTIONAL LAW.

Candidates are not to attempt more than EIGHT *questions, but these should include No. II.*

SECTION I.

I. (1) "The English Constitution forms a part of the common law."

(2) "The Cabinet is a body unknown to the law."

Discuss fully these statements, in relation to the Constitution of the United Kingdom.

II. Write a *short* note on each of the following subjects discussed in your text-book:—(1) The comparative merits of the "Parliamentary" and "Federal" systems of Government; (2) The processes by which the collection and expenditure of the revenue in the United Kingdom are kept subject to Parliamentary control; (3) The circumstances under which a public meeting may become unlawful; and (4) The precise effect of a suspension of the Habeas Corpus Act.

III. "A person subject to military law . . . . has duties and rights as a citizen as well as duties and rights as a soldier. His position in each respect is under English law governed by definite principles." State shortly the principles here referred to.

A, an officer in command of a body of troops called out for the purpose of quelling possible disorder at a time of great political excitement, orders his men to fire on a crowd. In consequence of this, B, who is under A's command, fires and wounds C, who had mingled with the crowd. Upon what considerations will the liability of (1), A and (2) B, respectively, depend?

SECTION II.

IV. (1) Examine the territorial limits of the applicability of the laws made by the Federal Parliament. (2) What do you consider to be the effect of the power conferred on the Federal Parliament to legislate "with respect to external affairs" (s. 51, sub-s. 29)?

V. "The King has come to be recognised at law as the sole legal representative of the State or organised community." Discuss briefly the effects of this conception on the legal relations of the Commonwealth and the States of Australia. In what respects have these results been modified by legislation?

VI. What provision is made by (1) The Commonwealth of Australia Constitution Act, with respect to the jurisdiction, original or appellate, to be exercised by the High Court of Australia; (2) The Judiciary Act, 1903, with respect to the jurisdiction of the High Court to hear appeals from the judgments of the Courts of a State; and (3) The Acts Interpretation Act, 1901, with respect to the computation of time and distance, in Acts passed by the Federal Parliament?

VII. Write a *short* note on any four of the following points:—

(1) The different forms of political status recognised under the laws of the Commonwealth; (2) The *exclusive* powers of the Federal Parliament; (3) The conditions under which the Federal Parliament may forbid "preference" or "discrimination" by any State; (4) The right of the Commonwealth to control and regulate the waters of navigable rivers; and (5) The case of D'Emden *v.* Peddar (1 C.L.R. 91).

SECTION III.

VIII. What provision is made by (1) The Constitution Statute, with respect to the boundary between New South Wales and Victoria; (2) The Constitution Act, 1902, with respect

to the appointment of public officers; (3) The Parliamentary Electorates and Elections Act, 1902, with respect to the method of determining disputed elections; and (4) The Interpretation Act, 1897, with respect to the power to be implied from the conferring of express authority to make appointments?

IX. (1) What are the different sources of Parliamentary privilege in New South Wales? (2) What points were decided in the cases of Taylor *v.* Barton (7 N.S.W.R. 30); Toohey *v.* Melville (13 N.S.W.R. 132); and Norton *v.* Crick (15 N.S.W.R. 172)?

X. (1) What is the source and present extent of (*a*) the Probate and (*b*) the Bankruptcy jurisdiction exercised by the Supreme Court? (2) How far is the Supreme Court invested with an appellate jurisdiction in criminal cases?

XI. Give a brief account of (1) The limitations now attaching to the jurisdiction of the District Courts; (2) The constitution and jurisdiction of (*a*) Courts of Quarter Sessions, and (*b*) Children's Courts; and (3) The functions of a Justice of the Peace other than at Sessions.

XII. Write a short explanatory note on each of the following:—(1) The special rules applicable to the passing of Money Bills in New South Wales; (2) The mode in which a Private Bill develops into law; (3) The nature of a "dilatory" motion; and (4) The modes of communication between the two Houses.

JURISPRUDENCE.

TWO HOURS AND A HALF.

Candidates are not to attempt more than SIX *questions, but these should include Nos. IV. and V.*

I. Contrast, briefly, the value of the services rendered to Jurisprudence by Austin and Maine, respectively.

II. Discuss the applicability of Austin's theory of Sovereignty to the Constitution of (1) Belgium; and (2) The United States of America.

III. (1) On what grounds would you justify the division of Law into Public and Private Law? (2) Explain and illustrate, also, the division into Constitutional and Administrative Law.

IV. Give a brief outline of the theory and system of judicial precedents that obtain in English Law. How would you determine the relative authority of judicial precedents?

V. Analyse and classify (according to Holland's scheme of law) the rights and relations arising in the following cases:—

(1) A duly agrees to purchase a horse from B. B wrongfully refuses delivery.

(2) A obstructs B's use of the highway.

(3) A patents an invention.

(4) A purchases B's picture, including the copyright.

(5) A, being a trustee for B, commits a breach of trust.

(6) A commits adultery with B's wife.

VI. Write a short explanatory note on each of the following:— "right," "duty," "fact," "event," "intention," "negligence," "property," and "possession."

VII. Describe the more important expedients by which progressive communities have endeavoured to overcome the obstacles to the transfer of property, existing in ancient times?

VIII. "The history of Contract gives a complete account of the march of ideas from one great landmark of Jurisprudence to another."—(MAINE.)

Explain and illustrate this statement.

ELEMENTS OF POLITICAL SCIENCE.

TWO HOURS.

Candidates are not to attempt more than SIX *questions*

I. "The nineteenth century falls into three periods during each of which a different current . . . . of opinion predominated, and in the main governed the development of the law of England." Explain and illustrate this statement.

II. What do you understand by the "individualistic" theory of government? What, shortly, are its underlying principles, and the arguments used in support of it? What qualifications would you regard as necessary, with a view to its application in practice?

III. State shortly the theory of the "Single Tax." What are its merits and defects?

IV. (1) What arguments may be adduced for and against "complete freedom of testamentary disposition"? What restrictions are advocated by Bentham?

(2) What are the merits and defects of a system of progressive death duties?

V. (1) How far, according to Bentham, should (*a*) motive and (*b*) intention, be taken into account in the affixing of punishment to crime?

(2) What view does Bentham take of the degree of criminality involved in (*a*) infanticide; (*b*) arson; (*c*) extortion by a public official; and (*d*) embezzlement by a clerk?

VI. What special provision is made by the law in force in this State, with respect to the treatment of (1) Habitual drunkards; (2) First offenders; and (3) Juvenile offenders?

VII. Discuss the difficulties attaching to Socialism as "a scheme of production."

VIII. Write a short note on each of the following subjects:—(1) Freedom of Contract; (2) The system of Bimetallism; (3) The general purport and effect of the Early Closing Acts, 1899 and 1900; and (4) The objects served by the industrial employment of prisoners.

NOTE.—Candidates are at liberty to submit a thesis on the following subject, as a substitute for three out of the six questions otherwise required to be answered:—

"An outline of the policy which you would consider best calculated to promote the interests of small settlement and agriculture in this State."

INTERNATIONAL LAW.—(PUBLIC AND PRIVATE.)

Candidates are not to attempt more than EIGHT *questions, but these should include* FOUR *questions in Section I., including No. VI., and* FOUR *questions in Section II.*

SECTION I.

I. "The Law of Nations is a part of the municipol law of each State." Examine this statement in its application to English Law (as in force in New South Wales).

II. Give a brief outline of the results achieved by the Hague Conference, 1899, with respect to—(1) The limitation of national armaments; (2) The pacific settlement of international disputes; and (3) The amelioration of the laws of war.

III. To what extent does International Law recognise right of "visit and search" over vessels at sea—(1) in time of peace,—and (2) in time of war? What forms are usually observed in the exercise of this right?

IV. Examine—(1) The modern practice with respect to the treatment of "enemy property" found within the territory of a belligerent on the outbreak of war;—and (2) The rights and duties of a belligerent whilst in "military occupation" of enemy territory.

V. "To constitute the offence of carrying contraband, a belligerent destination is essential; and hence there can be no contraband where the voyage is from one neutral port to another." Discuss this statement from the point of view both of principle and authority.

VI. Write a short note upon each of the following subjects:—(1) The principles usually accepted as the basis of extradition treaties; (2) The provisions of the Anglo-French Convention, 1904, with respect to French fishing rights in Newfoundland; (3) The "Twenty-four hour rule," and its modern developments; (4) The rights of a belligerent carrying on war at sea with respect to the use by a neutral vessel of wireless telegraphy; (5) The case of the "Knight Commander"; and (6) The facts and decision in the case of the "Charkieh."

SECTION II.

VII. What do you understand by Private International Law, or the conflict of Laws? How would you classify the main topics with which it deals?

VIII. (1) A, who is domiciled in France, dies intestate leaving freeholds in New South Wales, leaseholds in Victoria, and money on deposit in Queensland. By what law or laws will the descent of these interests be determined?

(2) A, who was domiciled in Victoria, dies leaving a will, in which he appoints B as his executor, and devises and bequeaths all his property real and personal to C. His estate includes land in New South Wales, money in English funds, and a debt secured by bond owing to him by a person resident in New York. Advise B as to what proceedings are necessary in order to realize the estate.

IX. A, whilst resident at Hamburg, makes a contract with B (the representative of a firm carrying on business in London), which is to be performed in New South Wales. A subsequently commits a breach of the contract. What rules (according to the view adopted by English Courts) will govern (1) the capacity of the parties;—(2) the form of the contract,—(3) its material validity,—(4) its interpretation,—and (5) the remedy for breach?

X. Under what conditions will the Supreme Court of New South Wales (1) dissolve a marriage duly contracted in a foreign country between persons previously domiciled there; and (2) recognize the jurisdiction of a foreign court to dissolve a marriage originally contracted in New South Wales?

XI. By what law (according to the view adopted by the English Courts) would you determine (1) the capacity of a testator to make a will; (2) the validity of the will in point of (*a*) form and (*b*) substance; and (3) its construction? Would it make any, and if so what, difference, if the testator were a British subject?

XII. Discuss the following cases, stating the principles involved:—

(1) A, who is domiciled in France, and is under interdiction for "prodigality," enters into a contract with B whilst in England, and subsequently sues B thereon. B sets up A's disability under the law of his domicile.

(2) A, who is domiciled in England, possesses (*a*) lands, and (*b*) shares in a company, respectively situated and registered in New South Wales. A is adjudicated bankrupt in England, and B is appointed trustee in his bankruptcy. Advise B as to his legal rights with respect to the property in New South Wales.

(3) A, who is domiciled in New South Wales, is the owner of the schooner "Mary." The "Mary" is wrecked on the coast of New Caledonia, and the cargo, which also belonged to A, is sold at Noumea (wrongfully according to English law), by the captain to B, who acquires a good title according to French law. B subsequently brings a part of the goods to Sydney. Advise A as to his rights in the matter.

FINAL EXAMINATION FOR THE DEGREE OF LL.B.

THE LAW OF CONTRACT AND MERCANTILE LAW.

Candidates are not to attempt more than EIGHT *questions, but these should include No. XI.*

I. "Obligation may also arise from quasi contract." (Anson, p. 8.) Distinguish between an "implied contract" and a "quasi-contract." To what extent is the conception of "quasi contract" recognised by English Law? Give examples.

II. A writes to B offering to sell him specific goods for £500. B replies by letter to the effect that he will buy the goods for £450. B's letter is delayed in the post. Meanwhile B telegraphs to A stating that on reconsideration he will buy the goods at A's price. The telegram reaches A shortly before the letter. A, however, after receiving the letter, refuses to let B have the goods. Advise B as to his position in the matter, stating the principles involved, and citing authority for your conclusions.

III. (1) What is the liability of an infant in respect of contracts made by him, under the law in force in this State?

(2) How far, if at all, is a parent liable for necessaries supplied to a son during his minority?

IV. What was the former attitude of the Common Law and of Equity, respectively, towards "misrepresentation"? What are the rights of a party who has been induced to enter into a contract (not being a contract *uberrimae fidei*) by misrepresentation, under the law now in force in this State?

V. (1) In what different ways may (*a*) a contract,—and (*b*) a right of action arising out of breach of contract,—be discharged?

(2) A duly agrees with B to act at his theatre in Sydney for a period of one month from 1st January, 1906; A agreeing also to be in Sydney at least six days before the 1st

January for the purposes of rehearsal. A only arrives in Sydney on the 29th December. B, thereupon, claims to regard the contract as discharged by A's breach. Advise A as to his position, stating the principles involved, and citing authority for your conclusion.

VI. (1) What, apart from statute, are the rights and remedies of a principal, whose agent has accepted a bribe from the other party to the contract?

(2) In what respects are the liabilities of agents of the Crown, on contracts made by them in that capacity, different from those of ordinary agents?

VII. What facts are necessary to constitute the holder of a B/X a "holder in due course"? What are the rights of a "holder in due course"?

Discuss the following cases:—(1) A draws a B/X for £100 on B, in favour of C, and induces B to accept the bill by falsely representing it to be a guarantee. Subsequently the bill is endorsed for value to D, who takes without notice of the fraud. A and C abscond, and D sues B.

(2) A directs his clerk, B, to draw a cheque for £100 in favour of C, a customer of A. B draws the cheque and obtain A's signature thereto. B then misappropriates the cheque, and having forged the endorsement of C, he negotiates the cheque, with D, who takes in good faith and for value. D obtains payment from the Bank on which the cheque was drawn.

VIII. When are the goods of an unpaid seller deemed to be "in course of transit" so as to be subject to a right of stoppage *in transitu*, in the event of the purchaser's insolvency.

Apply your answer to the following cases:—(1) A, at Dubbo, consigns wheat by rail to B, a miller, in Sydney. The wheat remains in the trucks for one day after arrival. B then agrees with the Railway Commissioners to pay them storage for the next two days; after which the wheat is removed to his store by a carrier employed by him. Up to what point can A exercise his right of stoppage *in transitu* in the event of B's insolvency?

(2) A, who resides at Dubbo, consigns wheat to C, another miller, in Sydney. On their arrival at Darling Harbour, D, a friend of A, having heard of C's insolvency, claims delivery of the goods as the agent of the unpaid seller. In fact D had no authority to act for A, but A afterwards ratifies D's act. Upon what circumstances will the validity of the stoppage depend?

IX. (1) What conditions or terms (apart from Statute) are implied, in a Bill of Lading, on the part of (*a*) the ship-owner, and (*b*) the shipper?

(2) To what extent are these conditions or terms modified by the "Sea Carriage of Goods Act," 1904 (Federal)?

X. Discuss the following cases, stating the principles involved:

(1) A owes B £1000. B insures A's life for £1500. A duly pays off the debt, but B keeps up the policy and upon A's death makes a claim for the full amount.

(2) A draws a B/X on B in favour of C for £100. A induces B to accept the bill by depositing with him a share certificate, with a transfer executed by A as owner of the shares, as security. A and B both become insolvent before the B/X matures. Advise C as to his rights in the matter.

(3) A orders from B a dozen ivory billiard balls similar to one which he leaves as a sample. B supplies the balls; but it turns out that both the balls supplied and the sample are made of composition ivory. A refuses to accept the balls supplied.

(4) A and B are in partnership. B retires and A carries on the business with a new partner, C. D, a customer of the old firm subsequently sells and delivers goods to the new firm, after the change, but without notice thereof. The new firm subsequently becomes insolvent. D sues B.

XI. Write a short note on each of the following points:—(1) The distinction between a void, a voidable and an unenforceable contract; (2) The circumstances under which a passenger will be bound by conditions printed on the back of his ticket; (3) The rules for distinguishing between "penalty" and "liquidated damages" in cases of contract; (4) The

nature of a "*del credere*" agency; (5) The conditions and effect of a valid "notice of abandonment" under a policy of marine insurance; and (6) The nature and effect of a "legal tender."

THE LAW OF TORTS AND CRIMES.

SECTION I.—TORTS.

Candidates are not to attempt more than FIVE *questions, but these should include No. IV.*

I. What is it necessary to prove in order to establish a cause of action for (1) deceit; (2) trespass to land; (3) nuisance occasioned by noisy machinery; and (4) malicious prosecution?

II. Illustrate the statement that the same facts may (1) give Z a remedy in contract against A and also a remedy in tort against B, or (2) make X liable in contract to C, and in tort to D.

III. What are the limitations to the exercise of statutory powers by which injury may be occasioned to private property or rights?

Discuss the following case:—

A statute authorises the construction of a railway. A's house near the line is injured by blasting used in excavating a cutting. Had the house been substantially built, the blasting would not have affected it. To excavate without the use of explosives would have enormously increased the cost of construction.

IV. Discuss the following cases, stating the principles involved:—

(1) A addresses a letter to the Postmaster-General, charging B, a letter-carrier, with stealing newspapers posted to A. The charge is not true, but A on reasonable grounds believes it. At the request of B's friends A withholds the letter. After the lapse of a week he forwards it. He would not have done so, had he not in the meantime quarrelled with B about a private business transaction.

(2) The window of A's shop is broken by a stone thrown from the street. A's manager, B, assuming wrongly that C was the culprit, gives him in charge. C sues A for false imprisonment.

(3) A sells B a growing crop. When B enters to cut the crop A orders him off the ground, and upon B's refusal to leave, forcibly ejects him, using no more force than is necessary for that purpose. B sues A for assault.

(4) A goes to a railway station to see a friend off by the train. He steps into a hole on the platform, which has become dangerous by neglect, and sprains his ankle. A sues the Railway Commissioners.

V. What is the doctrine of common employment? In what respects has it been modified by the Employers' Liability Act?

VI. Write a short explanatory note on each of the following:—(1) *volenti non fit injuria;* (2) trespass *ab initio;* (3) *res ipsa loquitur;* and (4) exemplary damages.

SECTION II.—CRIMES.

Candidates are not to attempt more than FIVE *questions, but these should include Nos. II. and IV.*

I. Discuss the defences of (1) necessity, and (2) coercion by husband, in criminal cases.

A falls ill while travelling across a back-country station. All his food is exhausted, and he is in imminent danger of death for want of nourishment. His wife, who is with him, there being no other way of obtaining food, kills a sheep. The wife is charged with larceny. Discuss this case.

II. What are the provisions of the Crimes Act, 1900, with reference to—(1) provocation in cases of homicide; (2) general deficiency in cases of embezzlement; (3) prosecutions for perjury; and (4) accessories before the fact?

III. What must be proved in order to support a conviction upon a charge of—(1) obtaining money by false pretences; (2) arson; (3) bigamy; and (4) larceny by a bailee?

IV. Discuss the following cases, stating the principles involved:—

(1) A, B and C are indicted for conspiring falsely to accuse D of a crime. The only evidence is that they went separately on the same day to a police station and charged D with the same crime, and that each of them knew the charge to be false.

(2) A steals B's watch. B discovers the theft, and A admits that he was about to sell it to C, and that C had frequently bought stolen goods from him. B then, in order to entrap C, allows A to take him the watch. A sells it to C, telling him that he had stolen it. C is charged with receiving the watch.

(3) A on leaving his club takes B's hat in mistake for his own. On discovering the mistake he gives the hat to his servant. A is charged with larceny.

(4) A murder having been committed, A, a constable, receives apparently trustworthy information that B was the murderer. B in fact is innocent. A endeavours to arrest B, who is on horseback. B spurs his horse forward, intending only to evade A, but A is knocked down and killed. B is charged with the murder of A.

V. In what cases, and to what extent, does a claim of right constitute a defence to a criminal charge?

A having bought a horse from B on credit refuses to pay when the term of credit expires. B, believing himself entitled to do so, enters A's paddock, takes the horse, and resells it. Discuss this case.

VI. (1) Under what circumstances is a Justice authorised to issue a search warrant? (2) What powers can lawfully be exercised under such warrant in respect of premises, goods found, and persons in whose possession they are found respectively?

THE LAW OF PROPERTY.

Candidates are not to attempt more than EIGHT *questions, but these should include Nos. VI., X., and XI.*

I. In what respects, and by what local enactments, has the law on the subject of Dower, which was in force in this State prior to 1837, been modified? What do you conceive to be the rules at present applicable?

II. In 1900, on the occasion of A's marriage with B, the fee simple of certain lands in Sydney was settled in trust for A for life, with remainder to B, his wife, if she survived him, with remainder to such children of the marriage as A might by will or deed appoint, and in default of such appointment to such children in equal shares. X and Y

are trustees of the settlement. A and B are both alive. There is issue of the marriage one child, C. It is desired to sell the lands. By whom (in default of express power in the settlement), and subject to what conditions, can such a sale be effected? Who can convey? To whom must the purchase money be paid, and how will it devolve?

III. (1) "The Statute of Uses is the foundation of all modern conveyancing." Explain, shortly, this statement.

(2) Discuss also the effect of the Statute upon the following dispositions:—

(*a*) Gift of lands "To A and his heirs to the use of B for ten years, and then to the use of the heirs of C."

(*b*) Gift of lands "To A and his heirs to the use of B for life, and after B's death to the use of A and his heirs in trust for the heirs of B."

IV. (1) What are the rights of a joint tenant of land with respect to alienation and partition?

(2) Land is conveyed to A, B, and C, and their heirs. C conveys his share to D in fee. D dies intestate, leaving a widow E, a son F, and two grand-daughters G and H (the children of a deceased daughter). What interest in the land will be taken by each of the above persons?

V. (1) "It is a rule that a limitation will not be construed as an executory devise or as a shifting use if it can fairly be construed as a remainder vested or contingent." Explain and illustrate this statement.

(2) In what ways may a contingent interest be alienated, under the law now in force in this State?

VI. What provision is made by the Real Property Act, 1900, with respect to (1) The powers of a lessor and the covenants of a lessee which will be *implied* in a lease; (2) The steps to be taken in order that a writ of execution may bind land under the Act; (3) The proceedings to be taken for the purpose of effecting a "foreclosure"; and (4) The remedy available in a case where a certificate of title has been lost or destroyed?

VII. (1) What is the nature and use of an abstract of title?

(2) A on the 1st January, 1906, duly agrees to purchase land held under a common law title from B. The contract contains a condition exempting B from the obligation of "abstracting or producing any deeds, &c., other than those in his possession." B delivers an abstract commencing with a deed dated 1880. Advise A as to his rights in the matter, citing authority for your conclusions.

(3) What covenants for title should be entered into upon a sale of freehold lands held under a common law title—by (*a*) a vendor who is himself a purchaser for value; (*b*) a vendor who derives his title by descent from a purchase for value; and (*c*) a vendor who sells as trustee?

VIII. (1) Explain, shortly, the methods by which mortgages of land held (*a*) under a common law title, and (*b*) under the Real Property Act, are respectively transferred.

(2) Examine the rights of a purchaser to rescind a contract for the purchase of land on the ground of misdescription (*a*) where it is a condition that no misdescription shall annul the sale, but that compensation shall be made, and (*b*) where there is no such condition.

IX. (1) To what extent and in what ways may future estates or interests be created in (*a*) chattels real, and (*b*) chattels personal?

(2) State briefly the general purport and effect of the Apportionment Act, 1905.

X. Discuss the following cases:—

(1) A and B, who are adjoining proprietors, bring their respective tenements under the Real Property Act. Owing to a misdescription a portion of A's property is wrongly included in the certificate of title issued to B. B in good faith erects a house on the portion wrongly included in his certificate. Subsequently A discovers the mistake. Advise A *precisely* as to his rights, and incidental obligations under the Act.

(2) A, who is the owner in fee of certain land held under a common law title, duly agrees to sell the same to B. B registers the contract, but A subsequently sells and conveys the lands for value to C without informing him of the prior agreement with B. What advice would you give to B, having regard to the present state of the authorities on this subject?

(3) A devises and bequeaths to B a freehold house together with certain furniture therein. B, at the time of A's death, was an undischarged bankrupt. B subsequently agrees to sell to C the house for £500, and the furniture for £300. Advise C as to whether he can safely proceed in the matter, giving reasons for your conclusion.

XI. Write a short explanatory note on each of the following points:—

(1) The conditions necessary to the valid transfer of an interest in a British ship; (2) The circumstances under which goods will be deemed to be in the "apparent possession" of a grantor, within the meaning of the Bills of Sale Act, 1898; (3) The general conditions necessary to the validity of a patent; (4) The nature and extent of copyright in a design; (5) The distinction between a legacy and a *donatio mortis causâ*; and (6) The distinction between a "common law" and a "maritime" lien.

EQUITY AND COMPANY LAW.

I. A by fraudulent misrepresentation induces B to convey to him land held under a common law title, at a gross undervalue. A having deposited the deeds with C by way of equitable security for money advanced, subsequently borrows the deeds, on the pretext that he wishes to prepare a proper legal mortgage to C. He then gives a legal mortgage, together with the deeds, to D; and a second mortgage to E. Discuss the respective rights of B, C, D and E, stating the principles involved.

II. In what cases does the Court of Equity grant relief:— (1) against a trespasser; (2) by way of damages; (3) by ordering accounts between principal and agent; (4) to one trustee against his co-trustee, where both are liable to their beneficiaries for a breach of trust; (5) for breach of a contract to sell chattels; and (6) for breach of a contract not in writing though required to be in writing by the Statute of Frauds?

III. The owner of a theatre runs a season of opera at his theatre. To finance the season he mortgages his theatre to a bank and obtains a joint and several guarantee to the bank

from A, B, and C for his account. The season is a failure, and as a result the owner of the theatre owes the bank £4000. A wishes to be advised as to his rights and liabilities.

IV. Explain the nature and incidents of a mortgage by deposit of deeds. How do you reconcile the validity of such a mortgage with the Statute of Frauds?

A has executed a legal mortgage to B to secure a debt of £500, with interest, and delivers the title deeds to B. B subsequently lends A a further sum of £100, and it is verbally agreed that the further loan shall be treated as secured by the original mortgage. Can B enforce his security for the whole £600? Give reasons for your answer.

V. Write a short note upon each of the following:—

(1) The right of a trustee to delegate his powers and duties, (2) The liabilities of a trustee who employs the trust property in his own business; (3) The duty of a trustee as regards trust properties of a wasting nature settled upon a tenant for life and remaindermen; (4) The rule in *Clayton's case*; (5) The practice of the Court as to ordering accounts on the footing of wilful default; and (6) The distinction between an "executed" and an "executory" trust.

VI. Discuss the following points of company law:—

(1) The shareholders of a limited company wish to engage in an undertaking which is outside the objects of their memorandum of association.

(2) A company wishes to purchase a property from A in consideration of an issue to him of fully paid-up shares.

(3) A limited company largely indebted to creditors has assets which by careful and gradual realisation would realise more than sufficient to pay all claims and a reasonable rate of interest. Some of the creditors are unwilling to wait for their money and insist on instant realisation at a sacrifice. This course the company desires to avoid.

Can these proposals be carried out; if so, how?

VII. What is meant by the list of contributories of a company in liquidation? What is the practice as to the settlement of the list, and who is liable to be placed on the list?

VIII. Explain what is meant by: (1) the consolidation of mortgages; (2) tacking securities; and (3) clogging the equity of redemption.

A has a mortgage over Blackacre and Whiteacre. B has a second mortgage over Whiteacre only. A proposes to sell Whiteacre under the powers in his mortgage. Can B prevent him, and what are B's rights generally?

IX. By a voluntary deed made in 1900 a husband to whom all the furniture in a house belongs purports to assign to his wife all the furniture then in the house and also all furniture which he may thereafter purchase and bring upon the premises. Five years afterwards there is a quarrel, the wife leaves the house and claims all the furniture, some of which was in the house at the date of the deed, the rest being recently purchased by the husband. The husband refuses to deliver up any of the furniture. Has the wife any remedy in Equity, and, if so, what? Give reasons for your answer.

THE LAW OF PROCEDURE.

Candidates are not to attempt more than NINE *questions, but these should include Nos. I., VII., IX. and XI.*

I. Advise the plaintiff as to the courses open to him in the following cases:—(1) He does not declare in time, and the defendant signs judgment; (2) The defendant pleads payment into Court of less than the amount claimed; (3) After issue joined he discovers that he should have added another person as co-plaintiff; (4) After a verdict in his favour, but before the time for signing judgment, he learns that the defendant is on the point of leaving for South Africa.

II. In what actions can the writ of summons be specially indorsed? How does the special indorsement affect the procedure in connection with (1) the appearance; (2) the declaration; and (3) the pleas?

III. Write a short explanatory note on each of the following:—(1) Trial of questions of law without pleading; (2) Sheriff's interpleader; (3) Nonsuit; and (4) Certificate for costs.

IV. State the steps in the procedure to enforce claims against the Government of (1) the State; and (2) the Commonwealth.

V. What are the conditions under which an appeal will lie from an interlocutory judgment of the Supreme Court to (1) the Privy Council; and (2) the High Court?

VI. (1) In what matters is the original jurisdiction of the High Court exclusive of that of the State Courts? (2) To what extent is federal jurisdiction vested in the State Courts?

VII. What are the provisions of the Crimes Act, 1900, with reference to—(1) judgment on demurrer; (2) amendment of variances; (3) joinder of counts upon distinct offences; and (4) refusal to plead?

VIII. What steps should be taken in the following cases?—

(1) The defendant in an action for debt dies after issue joined.

(2) The plaintiff in an action for negligence occasioning personal injuries, dies from the injuries after the case is set down for trial.

IX. (1) What distinction is there, in regard to the power of review by Superior Courts, between the decisions of Petty Debts Courts and of Justices exercising summary jurisdiction?

(2) Give an outline of the procedure upon an appeal by special case.

X. (1) In what cases can a writ of *capias ad satisfaciendum* be issued by a District Court?

(2) Enumerate the matters cognisable in the common law jurisdiction of the District Courts but not of the Supreme Court.

XI. State shortly the provisions of the District Court Act and rules with reference to the following matters:—(1) non-professional advocates; (2) notice to admit facts; (3) certiorari; and (4) steps to be taken at the hearing with a view to an appeal.

PLEADING AND EVIDENCE.

Candidates are not to attempt more than EIGHT *questions, but these should include Nos. IV., V., VIII. and X.*

I. Write a short explanatory note on each of the following:—(1) pleas in confession and avoidance; (2) joinder of causes of action; (3) *indebitatus* counts; and (4) equitable pleas.

II. What are the general principles governing the admissibility of pleas of set-off and cross-action?

A, a landlord, distrains upon the premises of B, his tenant, for £50, arrears of rent. Owing to an informality in the distress, he withdraws the bailiff. B sues A for wrongful distress. Advise A as to pleading by way of set-off or cross-action his claim for rent.

III. Explain and illustrate the following rules of pleading:—

(1) It is not necessary to state matter of which the Court takes notice *ex officio*.

(2) Pleas in abatement must give the plaintiff a better writ or declaration.

(3) Traverse must not be taken on an immaterial point.

IV. State (without drawing the pleas) by what pleas you would raise the following defences:—

(1) In an action against A for the negligent driving of his servant B, that B at the time was not engaged in A's business.

(2) In an action for £100 for goods sold and delivered, that the price of the goods was £50, and that this was paid at the time of the sale.

(3) In an action upon simple contract, that there was no consideration.

(4) In an action against a railway guard for assault, that the assault complained of was the arrest of the plaintiff under the authority of the Government Railway Act, 1901, s. 110, for fraudulently travelling in a first-class carriage with a second-class ticket.

V. (1) Draw a declaration by the indorsee against the indorser of a dishonoured promissory note.

(2) A declaration contains a count for assault and battery, and one for £100 money lent. The defence as to the assault and battery is that it was a boxing match between the plaintiff and defendant; as to the loan, that it was repaid. Draw pleas, raising these defences and also putting the plaintiff to the proof of his case.

VI. Write a short explanatory note on each of the following:—(1) burden of proof; (2) leading questions; (3) refreshing memory; (4) estoppel by conduct.

VII. State briefly the statutory provisions relating to the following matters:—(1) evidence by accused persons; (2) cross-examination as to previous written statements by the witness; (3) communications during marriage; (4) machine copies.

VIII. Discuss the admissibility of the evidence tendered in each of the following cases:—

(1) Action on a written contract for the sale of sheep at 7s. 6d. per head. The contract makes no provision as to terms of payment. Evidence is tendered that it was orally agreed that the purchaser should have one month's credit.

(2) A is the attesting witness to the execution of a deed by B. It is sought to prove the execution by calling C to give evidence that the signature is in B's handwriting. A is in Court.

(3) A sues B for libel. The imputation complained of is that A had committed forgery. B pleads "Not guilty." He tenders evidence that A had previously been convicted of obtaining money by false pretences.

(4) It is the course of business on a station for A, a boundary-rider, to report daily to B, and for B to enter in his journal, the particulars of any trespasses observed by A. A reports a trespass committed in his presence by C. In an action against C, A and B having both died, the entry in B's journal is tendered.

IX. (1) Give examples of rebuttable and irrebuttable presumptions.

(2) What presumptions arise in the following case, and how should they be dealt with by the Judge in charging the jury?—

A is prosecuted for bigamy in having married B in the lifetime of his wife C. The prosecution proves the marriage to C in 1896, and to B in 1904. A then puts in the record of his conviction in 1895 for bigamy in having in that year married X in the lifetime of his wife Y. This is all the evidence.

X. Advise on evidence in cases where it is required to prove:—

(1) a statement made in the presence of A, now in Melbourne; (2) B's signature to a contract, it being doubtful whether your witnesses can prove the signing or the handwriting; (3) a contract made by correspondence between your client (plaintiff) and the defendant; (4) the law of South Australia as to the liability of shareholders in a company for calls.

BANKRUPTCY, DIVORCE AND PROBATE.

Section I.

I. A trader being in debt to a wholesale house for a sum of £150, and to other creditors in various sums in all amounting to £500, mortgages the whole of his assets of the value of £500 to the wholesale house to secure the debt of £150 and a general advance of £100. Advise the other creditors with respect to their legal position, giving the authority for your conclusions.

II. To what extent are (1) The rights of a lessor affected by the bankruptcy of the lessee; (2) The rights of a mortgagee by the bankruptcy of the mortgagor; and (3) The rights of a Limited Company by the bankruptcy of the holder of partly paid-up shares?

III. Explain the following expressions in relation to the law of bankruptcy:—(1) A bankruptcy notice; (2) An examination under section 30; (3) Account of mutual credits; (4) Failure to keep usual and proper books of account; and (5) Ante-dating the bankruptcy.

SECTION II.

IV. An intestate domiciled in New South Wales dies without issue, leaving a widow, and two brothers, his only next of kin. He leaves *mobilia* and *immobilia* both in England and New South Wales. How would his estate be distributed?

V. (1) What protection is afforded to executors by statute against stale demands by (*a*) legatees, and (*b*) creditors of the testator?

(2) In what various ways may an executor be discharged from his executorship?

VI. A testator dies in 1905. By his will he devises to A an estate subject to a mortgage of £500 falling due in 1908; he bequeaths to B a policy of insurance for £1000 which has been deposited with a bank as security for an overdraft amounting at the date of death to £250. The residuary real estate, valued at £1000, is devised to C; the residuary personal estate, valued at £300, is bequeathed to D. The executor is not aware whether there are any other debts besides those mentioned, and no direction is given in the will how any of the debts are to be paid. The beneficiaries call on the executor to distribute. Advise the executor fully as to the steps to be taken and the principles governing the distribution.

VII. Write a short explanatory note on each of the following:—(1) Executor according to the tenor; (2) Probate in solemn form; (3) Administrator *pendente lite*; (4) "The Probate Court is not a Court of construction"; (5) A *devastavit*; and (6) Resealing a probate.

SECTION III.

VIII. What bearing has the law of the domicile of the parties upon the legality of a marriage that takes place in a country foreign to them both?

A, who is domiciled in New South Wales, marries in Paris B, who is domiciled in England. The marriage was legal according to the law of England and New South Wales, but illegal according to French law. What would be the position of A and B in New South Wales?

IX. What are the requisites of a valid marriage in New South Wales?

X. Write a short explanatory note on each of the following:—(1) Condonation and revival of a matrimonial offence; (2) Constructive desertion; (3) Domicile by operation of law *(domicilium necessarium)*; (4) Alimony *pendente lite*; (5) Intervention by the Crown Solicitor; and (6) Void as distinguished from voidable marriages.

FACULTY OF SCIENCE.

SECOND YEAR EXAMINATION.

PHYSICS I.

HONOURS.

1. Discuss the question of the accuracy attainable in ordinary laboratory practice in the measurement of mass, length, time, moment of inertia, rigidity, specific heat, electric resistance, electromotive force, current.
2. Explain fully how the incompressibility of a substance may be found by subjecting a truly cylindrical and uniform tube of the material to longitudinal tension, the tube being filled to a definite mark with a liquid.
3. Explain fully the procedure necessary in using mercury in glass thermometers in order to obtain temperatures to a high degree of precision.
4. Give an account of the experimental work which has been done on the question of the expansion of gases when no external work is performed. State the results obtained, and explain their practical importance.
5. Describe some reversible cycle of phenomena connected with temperature, but not connected with the expansion of gases. Apply the principles of thermodynamics to the case and explain the result derived.

PHYSICS II.

HONOURS.

1. Find an expression for the energy per unit volume in an electrostatic field, and show how an inferior limit to the force on an uncharged sphere in an electric field due to a point charge may be found.

2. A current flows symmetrically through a circular cylinder; find an expression for the magnetic force at a point outside and for a point inside the cylinder.

   A current i flows uniformly through a cylindrical shell circular in section, of negligible thickness, and a cms. radius; taking the mean magnetic force in the substance of the shell as i/a, find the mechanical effect on the shell due to the current.

3. Show, with a numerical example, the effect of a small air gap in the iron in diminishing the induction in a magnetic circuit.

4. Explain how the discussion of recent measurements of the mechanical equivalent of heat pointed to the necessity for the redetermination of some electrical constants.

   Give a brief account of the electrical researches undertaken in consequence, stating the results obtained.

5. Describe the measurement of some electrical quantity, indicating the nature of the corrections which would have to be applied to the observations, and the precautions which would have to be taken in order to attain the highest possible accuracy.

DEPARTMENT OF ENGINEERING.

FIRST YEAR EXAMINATION.

APPLIED MECHANICS.

HONOURS.

1. Make sketches showing how you would design the longitudinal and cross-girders of a bridge deck carrying a double line of railway; the cross-girders have a span of 25 feet, and are spaced 25 feet apart centre to centre. Assume for loading a consolidation engine having a total weight of 72 tons on four axles spaced 5 feet centre to centre.

   Make all necessary calculations.

2. Show how to design a riveted butt joint, with double cover plates connecting two plates each 9 inches wide by ½-inch thick, subjected to tension along the axis.

   Enumerate the various ways in which the joint may fail, and give the necessary equations for failure by shearing, tearing, and pressure on the bearing area.

3. Make sketches of any form of roof truss suitable for a span of 100 feet, and draw the reciprocal figures for dead load, and for a wind pressure on one side. Show how you would check the stresses given by the reciprocal figures by the method of moments, and indicate how you would tabulate the maximum stresses on the various members of the roof truss.

4. Investigate the equations of bending moments, shearing stresses, slope, and deflection in a beam supported at each end and loaded in the centre.

5. Write a specification of the tests which you would require for the following materials:—

   (*a*) Structural steel, as used in bridge work.

   (*b*) Rivet steel.

State the working stresses which you would allow in the following cases:—

(*c*) A plate-web girder in which the live load is ten times the dead load.

(*d*) A floor beam in a warehouse.

(*e*) A beam carrying a shop front in a building.

(*f*) A railway axle.

6. Make a sketch of either a Pratt truss or a lattice girder of about 150 feet span, and show how you would determine the stresses in the various members for a live load of 2 tons, and a dead load of 0·5 ton per foot run.

DESCRIPTIVE GEOMETRY.

HONOURS.

Written descriptions are not required, but the figures must be appropriately lettered. Thorough answers to a FEW questions are expected.

1. (*a*) Having given two intersecting straight lines, determine the plane containing them; also find the true angle between the lines.

(*b*) Determine the traces of a plane which shall be perpendicular to a given oblique plane VTH, pass through a given point A, and have a given inclination θ.

(*c*) Determine the traces of a plane which touches a given surface of revolution, axis vertical, at a given point P on its surface.

(*d*) Having given any two lines AB and CD, and the direction of the rays of light; to find the two points F and E in which a ray intersects both lines; that is, to find the shadow of the one line on the other.

2. OA, OB are the asymptotes of the rectangular hyperbola $x.y = 12$ square inches, and a surface is formed by the revolution of the hyperbola about OB. Draw the plan and elevation of the intersection of this surface by a right circular cylinder, of 3 inches diameter, whose axis is parallel to OA and intersects OB in a point 3 inches distant from O.

3. Draw the traces of a plane which is inclined at 60 degrees to the horizontal plane and at 45 degrees to the vertical plane. Draw also the plan and elevation of the section by such a plane of an L-shaped girder, size 4 inches by 4 inches by $\frac{1}{2}$ inch, which lies in the horizontal plane with its edges parallel to the vertical plane.

4. Given the projections of four points not in the same plane, determine the radius of the sphere having these points upon its surface.

5. Two equal right cones, height $1\frac{3}{4}$ inches, diameter of base $2\frac{1}{2}$ inches, have a common vertex. One rolls upon the other, which stands on the ground. Determine the locus of a point on the circumference of the base of the rolling cone.

6. "Let OA, OB, OC be any three lines of definite length in space, and *oa*, *ob*, *oc* any three lines of definite length in one plane; then the former lines can be projected into a figure similar to the latter by parallel projection."

Discuss this statement, and illustrate your remarks by reference to actual examples of trimetric projection.

SECOND YEAR EXAMINATION.

MECHANICAL ENGINEERING I.

HONOURS AND GRAHAME SCHOLARSHIP.

Not more than FOUR *questions should be attempted.*

1. Power is transmitted from one shaft to another by means of a belt. How is the transmission affected by (i.) journal friction, (ii.) stiffness of the belt, (iii.) elastic slip, (iv.) centrifugal tension of the belt? If it is required to deliver a given horse-power on the pulley shaft, show how to calculate the power to be supplied to the driver.

   Estimate the power lost in journal friction when 400 h.p. is delivered at 100 revolutions, the driving and the driven pulleys weighing 20 tons and 6 tons respectively, their journal diameters being 6 inches and $4\frac{1}{2}$ inches, and the coefficient of friction being 0·05.

2. A man purchases, at a nominal price, a simple engine (36 inches stroke, 24 inches diameter) operated by a Meyer's valve gear, with a boiler pressure of 60 lbs. per square inch, and intended to run at 75 revolutions per minute, the governor being of the ordinary loaded type.

   Having bought the engine he wishes to adapt it to his conditions. He has a boiler working at 90 lbs. per square inch, and desires to obtain from the engine 75 i.h.p. with the engine shaft running at 65 revolutions per minute.

   Explain generally how you would investigate such a problem, and the various methods that might be adopted, and indicate what you would probably advise the purchaser of the engine to do.

3. Prove that when a perfect gas expands adiabatically, the relation of pressure to volume is represented by the equation

$$PV^{\gamma} = \text{Constant.}$$

A pound of air enclosed in a vessel has a temperature of 45° F. It is compressed to one-third of its original volume. Calculate the work done on the air, supposing the compression to be (i.) isothermal, (ii.) adiabatic. What will be the final temperature of the air in the adiabatic process?

4. Give a short account of experiments which have revealed some of the important circumstances which attend the initial condensation and re-evaporation of water in the cylinder of an engine. By means of diagrams show how the temperature of the metal of the cylinder at some one point fluctuates with the temperature of the steam.

5. Describe the pin and slot mechanism, and show how it may be applied to give reciprocating motion to the ram of a slotting machine, and how the velocity ratio of the ram and the pin may be determined at any instant.

   In an actual case the slotted link is 13 inches long, centre to centre, the centre lines of the driving shaft and of the link pivot are in the same horizontal plane and are $6\frac{1}{2}$ inches apart, and the motion is communicated to the ram by a long connecting rod. Determine the positions of the pin and the ratios of time of cutting to time of return when the stroke length is 9 inches, 7 inches, and 5 inches respectively, and sketch a curve showing the velocity of the ram, both in cutting and in return, when the driving shaft makes 12 revolutions per minute, and the stroke is 9 inches.

6. Discuss, with the aid of neat diagrams and sketches, the principle of action of the Weston Gear Cutter.

7. Describe (with the aid of careful diagrams) and discuss the essential nature of, the accompanying mechanisms, *A*, *B*, *C*, *D*.

*MATRICULATION EXAMINATION.

LATIN.

1. Translate into English, extracts from Cicero pro Murena.

2. Translate, with brief comments—

   (*a*) Non usque eo L Catilina rem publicam despexit atque contempsit, ut ea copia, quam secum eduxit, se hanc civitatem oppressurum arbitraretur.

   (*b*) Mihi credite, iudices, in hac causa non solum de L Murenae, verum etiam de vestra salute sententiam feretis.

   (*c*) Et primum M Catoni vitam ad certam rationis normam derigenti et diligentissime perpendenti momenta officiorum omnium de officio meo respondebo.

3. Translate into Latin—

   (*a*) I beg you not to allow him to depart for Rome till he has given up the goods that he stole.

   (*b*) The crafty old Roman, though he pretended to be in favour of his friend's candidature, betrayed him.

   (*c*) I cannot understand why Cæsar was so inhuman as to forbid his men to succour the wounded Gauls.

   (*d*) The Cimbri sent envoys to demand that, when their brethren reached Italy, the Romans should give them lands. "Your brethren," replied Marius, "have already as much land as they are like to need:" and he produced some Teuton prisoners, who sufficiently explained the meaning of his words. The Cimbrian chief, nothing daunted, rode up to the Roman lines, and challenged the generals to fix the day and place for a battle. "The Romans," answered Marius, "are not wont to consult the enemy on such matters. However, we will humour you. Let the day be the third day hence; the place, the plain of Vercellae."

* The time allowed for each paper is three hours, except where otherwise stated.

4. Translate—

Postquam dicendi finem Perseus fecit, coniecti eorum, quī aderant, oculi in Demetrium sunt, velut confestim responsurus esset. Deinde diu fuit silentium, quum perfusum fletu appareret omnibus loqui non posse. Tandem vicit dolorem ipsa necessitas, quum dicere iuberent, atque ita orsus est: "Omnia, quae reorum antea fuerant auxilia, pater, praeoccupavit accusator. Simulatis lacrimis in alterius perniciem veras meas lacrimas suspectas tibi fecit. Quum ipse, ex quo ab Roma redii, per occulta cum suis colloquia dies noctesque insidietur; ultro mihi non insidiatoris modo, sed latronis manifesti et percussoris, speciem induit. Periculo suo te exterret, ut innoxio fratri per eundem te maturet perniciem."

GREEK.

1. Translate into English, with brief notes on the underlined words, extracts from Andocides de Mysteriis.

2. Translate into English—

ἐπερρώσθη δ' ἄν τις καὶ ἐκεῖνο ἰδὼν, Ἀγησίλαον μὲν πρῶτον, ἔπειτα δὲ καὶ τοὺς ἄλλους στρατιώτας ἐστεφανωμένους ἀπὸ τῶν γυμνασίων ἀπιόντας καὶ ἀνατιθέντας τοὺς στεφάνους τῇ Ἀρτέμιδι. ὅπου γὰρ ἄνδρες θεοὺς μὲν σέβοιντο, τὰ δὲ πολεμικὰ ἀσκοῖεν, πειθαρχεῖν δὲ μελετῷεν, πῶς οὐκ εἰκὸς ἐνταῦθα πάντα μεστὰ ἐλπίδων ἀγαθῶν εἶναι; ἡγούμενος δὲ καὶ τὸ καταφρονεῖν τῶν πολεμίων ῥώμην τινὰ ἐμβάλλειν πρὸς τὸ μάχεσθαι, προεῖπε τοῖς κήρυξι τοὺς ὑπὸ τῶν λῃστῶν ἁλισκομένους βαρβάρους γυμνοὺς πωλεῖν. ὁρῶντες οὖν οἱ στρατιῶται λευκοὺς μὲν διὰ τὸ μηδέποτε ἐκδύεσθαι, μαλακοὺς δὲ καὶ ἀπόνους διὰ τὸ ἀεὶ ἐπ' ὀχημάτων εἶναι, ἐνόμισαν οὐδὲν διοίσειν τὸν πόλεμον ἢ εἰ γυναιξὶ δέοι μάχεσθαι.

3. Translate into Greek—

(*a*) If the soldiers had not gone out of the city they would have been captured by the enemy.

(*b*) They feared that the Greeks would attack them during the night.

(*c*) He said that the general was dead.

(*d*) The leaders having been slain, Xenophon was made general.

(*e*) They sent out messengers to learn the number of the enemy.

(*f*) Do whatever he orders you.

FRENCH.

[*The answers are to be given up in two separate bundles, which are to be marked clearly* **A** *and* **B**. *Answers given up in the wrong bundle will receive no marks. Each sheet is to be clearly marked with the letter* **A** *or the letter* **B**.]

A.

1. Translate into English, extracts from Daudet, Tartarin de Tarascon.

2. (*a*) Write down (in the third person singular) the past definite and future of *faut*, *eût dit*, *avaient entendu*, *partir*, *luisait*, *voyait*.

   (*b*) Translate the following expressions, giving the numerals in full:—Five thousand men; five hundred men; five hundred and eighty men; five hundred and eighty four men; Napoleon died in the year 1825.

   (*c*) When is *de* in the partitive sense (*some*, *any*) used alone before nouns, and when is the article required as well?

B.

3. Translate into French—

   (*a*) (i.) How often must I tell you to go?

   (ii.) I did not hear you, sir.

   (iii.) You will certainly be late, unless you run.

   (iv.) What o'clock is it? I think my watch must be slow.

   (v.) It is a quarter past one.

   (vi.) Dear me! I fear they will all be gone.

   (*b*) Many stories are told of the artist, Holbein. When his works were becoming too numerous in his native town, he determined to go elsewhere, but he intimated that he would leave behind him a proof of his abilities. He had still at his house a portrait of one of his patrons, which he had just finished. On the forehead he painted a fly, and the picture to the person for whom it was intended. The

gentleman struck with the beauty of the piece, went eagerly to brush off the fly, and discovered his mistake. The story soon spread and made more impression than efforts of greater excellence. Orders were immediately given to prevent the city from being deprived of so wonderful an artist, but Holbein was already gone.

4. Translate (at sight)—

BERTRAND DU GUESCLIN.

Son père et sa mère, profondément affligés de ses façons rudes et grossières, le souffraient avec peine en leur présence; ils ne permettaient point qu'il s'assît à la table de famille; il prenait ses repas seul, relégué dans un coin. Mais sous cet extérieur laid, repoussant et dur, l'enfant cachait une âme ardente et sensible, aussi fière que généreuse; il dévorait ses larmes, et il lui arrivait parfois de se révolter contre les traitements dont il était l'objet. On raconte qu'un jour, à l'heure du repas de la famille, comme il mangeait seul dans son coin, le petite Bertrand, âgé de dix ans à peine, fut provoqué par quelques railleries. Outré de fureur, il se leva, s'élança vers la table où étaient assis sa mère avec ses frères et ses sœurs, et, s'adressant à ceux-ci d'un ton de maître, il leur commanda de lui faire place à côté d'eux, et au haut bout, comme à leur aîné. Intimidés par sa voix et son geste, ses frères obéirent. Bertrand prit place auprès d'eux sans que sa mère s'y opposât. A peine cependant fut-il assis, qu'il se comporta d'une façon si grossière et si malpropre, que sa mère indignée lui ordonna de se lever et de sortir. L'enfant obéit; mais dans le transport de sa colère, il secoua de sa petite main la massive table de chêne d'une telle force, qu'il renversa table, service et tous les mets sur les convives.

GERMAN.

1. Translate into English, extracts from Wildenbruch, Harold.
2. (*a*) Write down the principal parts of trieb, erklingt, spricht, schwellt, wirft, zerfleischt.

   (*b*) Write down the nominative plural of Haupt, Baum, Mund, Rittersmann, Fluchs, Friedens.

   (*c*) In what way, besides the imperative, can a command be expressed in German?

3. Translate into German—

(*a*) (i.) Have you been out of town lately?

(ii.) Yes, I was with my cousin for a week or two in the beginning of February.

(iii.) I should have liked to stay longer, but I was not allowed to do so.

(iv.) I suppose you are pretty busy?

(v.) I ought to be, for I have an examination in a fortnight.

(vi.) Reading and writing take up the whole day.

(*b*) When Gainsborough lived at home, both he himself and his neighbours were ignorant of his genius as artist till an accident revealed it. One day, seeing a country-fellow looking wistfully over his garden wall at some pears, he caught up a bit of board, and painted him so inimitably well that, the board being placed upon the wall, several of the neighbouring gentry and farmers immediately recognised the figure who had paid many unwelcome visits to their own orchards: and the man being by means of this likeness charged by one of them with the robbery of his fruit, acknowledged it, and agreed to go into the army to escape a worse fate.

4. Translate (at sight)—

Die glorreiche Schlacht Gustav Adolfs bei Leipzig hatte in dem ganzen nachfolgenden Betragen dieses Monarchen, sowie in der Denkart seiner Feinde und Freunde, eine große Veränderung gewirkt. Er hatte sich jetzt mit dem größten Heerführer seiner Zeit gemessen, er hatte die Kraft seiner Taktik und den Mut seiner Schweden an dem Kern der kaiserlichen Truppen, den geübtesten Europens, versucht und in diesem Wettkampf überwunden. Von diesem Augenblick an schöpfte er eine feste Zuversicht zu sich selbst, und Zuversicht ist die Mutter großer Thaten. Man bemerkt fortan in allen Kriegsunternehmungen des schwedischen Königs einen kühnern und sicherern Schritt, mehr Entschlossenheit auch in den mißlichsten Lagen, mehr trotzige Verhöhnung der Gefahr, eine stolzere Sprache gegen seinen Feind, mehr Selbstgefühl gegen seine Bundesgenossen und in seiner Milde selbst mehr die Herablassung des Gebieters. Seinem natürlichen Mut kam der andächtige Schwung seiner Einbildung zu Hilfe;

gern verwechselte er seine Sache mit der Sache des Himmels, erblickte in Tillys Niederlage ein entscheidendes Urteil Gottes zum Nachteil seiner Gegner, in sich selbst aber ein Werkzeug der göttlichen Rache.

ARITHMETIC.

TWO HOURS AND A HALF.

1. Divide £18,627 11s. 5d. among 621 persons, as evenly as possible giving each person an exact number of pence. How many will receive 1d. more than the others?

2. A rectangular paddock whose length is twice its breadth contains 12·8 acres. Find the cost of fencing in this paddock at 15s. a rod of $16\frac{1}{2}$ feet.

3. By how much does the sum of $\frac{1}{3}$, $\frac{3}{5}$, $\frac{4}{7}$, $\frac{7}{8}$ and $\frac{9}{11}$ fall short of 5?

4. Reduce $\frac{12997}{14637}$ to its lowest terms.

5. Eggs are bought at $11\frac{1}{2}$d. a dozen, and sold at 9s. 7d. a hundred. What profit do I make (expressed as a percentage of the money received)?

6. At what rate per cent. per annum, simple interest, will £1200 return £4 2s. 6d. each month?

7. I sell out £5000 N.S.W. $3\frac{1}{2}$ per cents. at $99\frac{1}{4}$ (brokerage, $\frac{1}{2}$ per cent.) and invest the proceeds as far as possible in Gas Company's shares, £6 each, at £$18\frac{1}{4}$ (no brokerage), paying 15 per cent. How much money is left in my hands uninvested, and by how much is my income increased?

8. A man enters into a speculation which returns him 40 per cent. profit. With the proceeds he again speculates, but makes a loss of 20 per cent.; again investing the proceeds he makes a loss of 15 per cent. If he started with £5000 how much had he at the end?

9. A gallon of water contains 277·3 cubic inches, and 1 cubic foot of water weighs 1000 ounces. Express the weight of a pint of water in lbs. correct to two decimal places.

ALGEBRA.

TWO HOURS AND A HALF.

SQUARED PAPER TO BE PROVIDED.

1. Find the remainder when

$$ax^3+bx^2+bx+a$$

is divided by $(x-1)$, and find when the expression contains $x-1$ as a factor.

2. Simplify the expression

$$\frac{3}{x-1}-\frac{4}{x-2}+\frac{1}{x-4},$$

and find for what value, or values of x, this expression vanishes.

3. Reduce to their lowest terms—

(i.) $\dfrac{2x^2-18}{3x^2+3x-18}$,

(ii.) $\dfrac{xy-xyz}{3bz-3bz^2}$,

(iii.) $\dfrac{3x^2+2x-1}{x^3+x^2+x+1}$.

4. A man makes 304 runs in 15 innings at cricket. How many must he make in the next three innings so that he may have an average of 20?

5. Solve the equations—

(i.) $\dfrac{6x+1}{3x-5}-\dfrac{2x-5}{3x-4}=\dfrac{27}{2}$.

(ii.) $\dfrac{x+a}{x-c}+\dfrac{x+c}{x-a}=2$.

(iii.) $\sqrt{2x}+\sqrt{5x}=\sqrt{7x+1}$,

verifying the solutions in each case.

6. What values of x and y will make the expressions—

(i.) $2x+3y-6$,

(ii.) $3x+6y-18$.

both zero?

Also solve the problem graphically.

7. A sum of £2 5s. is paid in half-crowns, shillings and sixpences. There are 40 coins in all, and the number of sixpences is double that of shillings. Find how many of each are used.

8. Solve the quadratic equations—

(i.) $2x^2-3x=0$,

(ii.) $1-26x^2=11x$,

(iii.) $x^2-px+q=0$,

without quoting any formula for the roots of a quadratic.

GEOMETRY.

TWO HOURS AND A HALF.

PAPER A.—(EUCLID.)

1. Any two sides of a triangle are together greater than the third.

2. If two triangles have two angles of the one equal to two angles of the other respectively and one side equal, etc. Complete this enunciation and prove the theorem.

If the diagonal AC of a quadrilateral ABCD bisects the angles at A and C, prove that it is at right angles to the diagonal BD.

3. Prove that the opposite sides and angles of a parallelogram are equal to one another and that each of the diagonals bisects the parallelogram. Prove also that the diagonals of a parallelogram bisect one another.

4. Two sides of a triangle are together greater than double the median that bisects the third side.

5. In an obtuse angled triangle, the square on the side subtending the obtuse angle is greater than the sum of the squares on the sides containing the obtuse angle by twice the rectangle contained by either of the sides containing the obtuse angle and the projection of the other upon it.

Investigate whether the triangle, whose sides are $3\frac{1}{2}$, $2\frac{1}{2}$, $1\frac{1}{2}$ inches, is obtuse or acute angled, and find the lengths of the projections of the sides whose lengths are $2\frac{1}{2}$ and $1\frac{1}{2}$ units on the sides, whose lengths are $1\frac{1}{2}$, $2\frac{1}{2}$ units respectively.

6. Prove that the shortest and longest lines which can be drawn from an external point to the circumference of a circle are the lines cut off by the circle on the line joining the external point to the centre of the circle.

7. Draw a tangent to a given circle from a given point without it. Prove that the two tangents which can be drawn to a circle from an external point are equal to one another.

8. If two chords of a circle intersect within it, the rectangle contained by the segments of the one is equal to the rectangle contained by the segments of the other. Prove this in the case when neither chord passes through the centre.

PAPER B.—(NEW REGULATIONS.)

SQUARED PAPER TO BE PROVIDED.

1. With your instruments construct a quadrilateral whose sides measure 2 inches, 1·5 inches, 2·4 inches and ·7 inches respectively, and having the angle between 2 inches and 1·5 inches a right angle. Show by measurement that the sum of the sides is greater than the sum of the diagonals but less than twice the sum of the diagonals.

2. Prove that the opposite sides and angles of a parallelogram are equal to one another and that each of the diagonals bisects the parallelogram. Prove also that the diagonals of a parallelogram bisect one another.

3. Prove that any two sides of a triangle are together greater than double the median that bisects the third side.

4. In an obtuse angled triangle, the square on the side subtending the obtuse angle is greater than the sum of the squares on the sides containing the obtuse angle by twice the rectangle contained by either of the sides containing the obtuse angle and the projection of the other upon it.

   The sides of a triangle are $1\frac{1}{2}$, $2\frac{1}{2}$, $3\frac{1}{2}$ inches respectively; find the projection of the $2\frac{1}{2}$ side on the $1\frac{1}{2}$ side and of the $1\frac{1}{2}$ side on the $2\frac{1}{2}$ side by calculation.

5. Prove a construction for dividing a straight line so that the rectangle contained by the whole and one part may be equal to the square of the other part.

   Taking the whole line 4 inches long, find by calculation the lengths of the two parts to the nearest tenth of an inch.

6. Prove a construction for drawing a tangent to a given circle from a given point without it.

7. Prove that the sum of the opposite angles of a quadrilateral inscribed in a circle is two right angles.

8. Prove that, if two chords of a circle, neither of which passes through the centre, intersect within the circle, the rectangle contained by the segments of the one is equal to the rectangle contained by the segments of the other.

If the radius of the circle is 5 inches and the chord is drawn through a point distant 3 inches from the centre, find by calculation the area of this rectangle.

*ENTRANCE EXAMINATION

FOR THE

FACULTIES OF LAW, MEDICINE AND SCIENCE,

INCLUDING THE

DEPARTMENT OF ENGINEERING AND P. N. RUSSELL SCHOLARSHIP.

LATIN.

1. Translate into English, extract from Cicero pro Murena.

2. Translate, with brief comments—

   (*a*) Et primum M Catoni vitam ad certam rationis normam derigenti et diligentissime perpendenti momenta officiorum omnium de officio meo respondebo.

   (*b*) Mihi credite, iudices, in hac causa non solum de L Murenae, verum etiam de vestra salute sententiam feretis.

3. Translate into English, an extract from Virgil, Æneid, Book II.

4. Translate, with brief comments on the underlined words—

   (*a*) Fuimus Troes, fuit Ilium et ingens
   gloria, Teucrorum; ferus omnia Iupiter Argos
   transtulit.

   (*b*) Et terram Hesperiam venies, ubi Lydius arva
   inter opima virum leni fluit agmine Thybris.

   (*c*) Inutile ferrum
   cingitur ac densos fertur moriturus in hostes.

5. Translate—

   Hannibal non adhibitus in consilium, propter colloquia cum Villio suspectus regi, et in nullo postea honore habitus, primo eam contumeliam tacitus tulit: deinde melius esse ratus, et percunctari causam repentinae alienationis, et purgare se, tempore apto, quaesita simpliciter iracundiae causa auditaque, "Pater Hamilcar," inquit, "Antioche, parvum admodum me, quum sacrificaret, altaribus admotum iureiurando adegit, nunquam amicum fore

---

* The time allowed for each paper is three hours, except where otherwise stated.

populi Romani. Sub hoc sacramento sex et triginta annos militavi: hoc me in pace patria mea expulit: hoc patria extorrem in tuam regiam adduxit: hoc duce, si tu spem meam destitueris, ubicunque vires, ubi arma esse sciam, huc veniam, toto orbe terrarum quaerens aliquos Romanis hostes."

6. Translate into Latin—

Meanwhile the conduct of Marius began to excite distrust in the mind of the general. When he named the rude soldier his lieutenant, he expected doubtless that the offer of serving under a Metellus would be honour sufficient. But the military talents of Marius had become manifest, and he had become a favourite with the soldiery. "If he had half the army," he used to say, "he would soon make an end of the war." He gave out that he intended to offer himself as candidate for the consulship, and requested leave of absence as soon as he could be spared. "It will be time for you to seek the consulship," said Metellus, "when my son (a youth of twenty years old) can be your colleague"—ungenerous words, that rankled for ever in the heart of Marius.

FRENCH.

The answers are to be given up in two separate bundles, which are to be marked clearly **A** *and* **B**. *Answers given up in the wrong bundle will receive no marks. Each sheet must be clearly marked with the letter* **A** *or the letter* **B**.

A.

1. Translate into English, extracts from Daudet, Tartarin de Tarascon.

2. Translate into English, extracts from Molière, L'Avare.

B.

3. Translate into French—

The sources of the noblest rivers, which spread fertility over continents, and bear richly laden fleets to the sea, are to be sought in wild and barren mountain tracts, incorrectly laid down in maps, and rarely explored by travellers. To such a tract the history of our country during the thirteenth century may not unaptly be compared. Sterile and obscure as is that portion of our annals, it is there that we must seek for the origin of our freedom, our prosperity, and

our glory. Then it was that the great English people was formed, that the national character began to exhibit those peculiarities which it has ever since retained, and that our fathers became emphatically islanders—islanders not merely in geographical position, but in their politics, their feelings, and their manners. Then first appeared with distinctness that constitution which has ever since, through all changes, preserved its identity; that constitution of which all the other free constitutions in the world are copies, and which, in spite of some defects, deserves to be regarded as the best under which any great society has ever yet existed during many ages.

4. Translate (at sight)—

Il se trouve dans certaines villes de province des maisons dont la vue inspire une mélancolie égale à celle que provoquent les cloîtres les plus sombres, les landes les plus ternes ou les ruines les plus tristes. Peut-être y a-t-il à la fois dans ces maisons et le silence du cloître, et l'aridité des landes, et les ossements des ruines; la vie et le mouvement y sont si tranquilles, qu'un étranger les croirait inhabitées, s'il ne rencontrait tout à coup le regard pâle et froid d'une personne immobile dont la figure à demi monastique dépasse l'appui de la croisée, au bruit d'un pas inconnu. Ces principes de mélancolie existent dans la physionomie d'un logis situé à Saumur, au bout de la rue montueuse qui mène au château, par le haut de la ville. Cette rue, maintenant peu fréquentée, chaude en été, froide en hiver, obscure en quelques endroits, est remarquable par la sonorité de son petit pavé caillouteux, toujours propre et sec, par l'étroitesse de sa voie tortueuse, par la paix de ses maisons, qui appartiennent à la vieille ville et que dominent les remparts. Des habitations trois fois séculaires y sont encore solides, quoique construites en bois, et leurs divers aspects contribuent à l'originalité qui recommande cette partie de Saumur à l'attention des antiquaires et des artistes.

ARITHMETIC.

TWO HOURS AND A HALF.

1. Simplify $(2189^2-2171^2)\div(3275^2-3265^2)$.

2. Express as a decimal correct to five places

$$\frac{1}{1^2}+\frac{1}{1^2.3^2}+\frac{1}{1^2.3^2.5^2}+\frac{1}{1^2.3^2.5^2.7^2}+\cdots$$

3. Define the G.C.M. and L.C.M. of two numbers. Show that the product of the G.C.M. and L.C.M. of two numbers is equal to the product of the numbers. Is this theorem true for three numbers?

4. A wheel makes 514 revolutions in passing over, with no slipping, 2 miles 2804 feet. Find its circumference and its radius.

5. A closed rectangular packing case is 2 feet 8 inches by 2 feet 2 inches by 1 foot 6 inches outside measurements. It is made of material $\frac{3}{4}$ inch thick. Find the cubic contents of the case, and the area of the outer surface.

6. A ratio whose true value is 43:36 is taken for practical purposes as 6:5 What is the percentage of error estimated on the value taken?

7. What sum of money will amount to £87 10s. at 3 months at 7 per cent. per annum simple interest? If a banker discounts a bill for this amount and period at 7 per cent., find how much he will give for it. The days of grace may be disregarded.

8. A franc=100 centimes; £1=25·22 francs. A merchant invests £100 in 10-centime pieces and puts them into circulation in London as pennies. What gross profit does he make?

9. Express 10 francs per metre as pence per yard, taking 1 metre=39·37 inches.

10. Show that if the lengths of the diagonals of a quadrilateral and the angle between them are given the area is thereby fixed. Express the area in acres when the lengths are 1000 feet and 1200 feet and the angle is 60°.

ALGEBRA.

TWO HOURS AND A HALF.

LOGARITHM TABLES AND SQUARED PAPER ARE PROVIDED.

1. Solve the following equations

(i.) $\sqrt{5x+1}-2\sqrt{x-3}=2$

(ii.) $$\left.\begin{aligned} x-2y&=1 \\ 3x^2-7xy+2y^2&=0 \end{aligned}\right\}$$

(iii.) $x^2-2x=2\sqrt{x^2-3x}+x.$

2. Find the formula for the roots of a quadratic equation, and prove that if α, β are the roots of the equation

$$x^2-px+q=0$$
$$\alpha+\beta=p$$
$$\alpha\beta=q.$$

3. Find the different quadratic equations whose roots (α, β) satisfy

$$(\alpha+\beta)^2=4a^2$$
$$(\alpha-\beta)^2=4b^2.$$

4. What is the advantage in numerical calculation of rationalizing the denominator of a fraction involving surds?

Reduce

$$\frac{7+\sqrt{7}}{(5-\sqrt{7})(\sqrt{7}+2)}$$

to its simplest form with a rational denominator, and calculate its value as a decimal with a limit of error of ·001.

5. Show how to obtain the rth term from the beginning, and also the rth term from the end of the Arithmetical Series whose first term and last term are a and l, and whose common difference is d.

Hence prove that the sum of n terms is

$$\frac{n}{2}(a+l).$$

Prove that the ratio of the sum of the first n odd positive integers to the sum of the first n even positive integers is $n:n+1$.

6. If $\dfrac{x+y}{x-y}=\dfrac{2}{3}$, find $\dfrac{x^2-xy+y^2}{x^2+xy+y^2}$.

7. Explain how the operations of multiplication and division in arithmetic are reduced to those of addition and subtraction by the use of logarithms.

Find the value of $c^{\frac{1}{2}}$ when

$$c=a^{\frac{1}{2}}+b^{\frac{1}{2}}$$
and $a=1\cdot234$
$b=4\cdot321.$

8. Prove the Binomial Theorem for the case of n, a positive integer, and show that

$$(a+\sqrt{a^2-1})^6+(a-\sqrt{a^2-1})^6=2(32a^6-48a^4+18a^2-1).$$

GEOMETRY.

TWO HOURS AND A HALF.

N.B.—While all candidates are required to know the subject matter of the first four books of Euclid, Euclid's sequence will not be insisted upon in the case of those whose instructions have followed another order. Such candidates are required to state the text-books they have studied.

1. Prove that the four sides of any quadrilateral are together greater than the sum of the two diagonals, but are less than twice the sum of the diagonals.

2. In any right-angled triangle the square described on the hypothenuse is equal to the sum of the squares on the other sides.

   Divide a straight line into two parts the sum of the squares on which shall be equal to a given square. What limit is there to the size of this given square?

3. ABC is a triangle and D is the middle point of BC. Prove that

$$AB^2+AC^2=2(AD^2+BD^2)$$

   If the angle BAC is made very obtuse so that the point A finally falls on BC, what does this theorem become?

4. If one circle touches another internally, the straight line joining their centres on being produced passes through the point of contact.

5. Circles described on the two sides of a right-angled triangle which contain the right angle as diameters will be touched by a circle whose centre is the middle point of the hypothenuse and whose diameter is equal to the sum of the sides containing the right angle.

6. Establish the converse of the proposition that the sum of the opposite angles of a quadrilateral inscribed in a circle is equal to two right angles.

   Prove that the bisectors of the exterior angles of any quadrilateral form a quadrilateral about which a circle can be described.

7. The angles between the tangent to a circle at any point and a chord through that point are equal to the angles in the alternate segments.

ABCD is a cyclic quadrilateral AC, BD intersect at E. Prove that the tangent at E to the circle ABE is parallel to CD.

8. Show how to inscribe a circle in, and circumscribe a circle about any triangle.

If these two circles are concentric, prove that the triangle is equilateral.

Additional for Candidates for the P. N. Russell Scholarships.

9. Triangles which are equiangular to one another are similar. Through one of the points of intersection of two given circles any straight line is drawn cutting the circles again in P and Q; show that the locus of the point which divides PQ in a given ratio is a circle.

10. If two straight lines are parallel and one of them is perpendicular to a plane, the other is also perpendicular to that plane.

TRIGONOMETRY.

TWO AND A HALF HOURS.

LOGARITHM TABLES TO BE PROVIDED.

1. Find by the aid of a diagram the sine, cosine and tangent of 30°.

Write down the values of

$\sin 150°$, $\cos 210°$, $\tan 330°$.

2. Establish the following identities :—

(i.) $\dfrac{\cot\theta+\operatorname{cosec}\theta}{\cot\theta-\operatorname{cosec}\theta}+\dfrac{\sin^2\theta}{(1-\cos\theta)^2}=0.$

(ii.) $\dfrac{\sin^3 A+\cos^3 A}{\sin A+\cos A}+\dfrac{\sin^3 A-\cos^3 A}{\sin A-\cos A}=(2\operatorname{cosec}^2 A-\cos^2 A\operatorname{cosec}^2 A).$

3. A flagstaff AB is 50 feet high and at D 10 feet from the top a horizontal cross bar CDE is fastened, CD and DE being each 12 feet. Ropes are attached to the top of the flagstaff A and to D. Those from D are fastened to pegs in the

ground distant 10 feet from B. Those from A pass through C and E, and are then fastened to two of these pegs in the plane ACD. Find the angles which these ropes make with the vertical.

4. Prove geometrically that

$$\sin(180^\circ - A) = \sin A,$$
$$\sin(270^\circ - A) = -\cos A,$$

taking $0^\circ < A < 90^\circ$.

Express $\sin 780^\circ$, $\cos 810^\circ$, $\tan(-920^\circ)$, in terms of ratios of angles between 0° and 45°.

5. Assuming the formula for $\tan(A+B)$, find that for $\tan 2A$ in terms of A, and deduce the value of $\tan 22^\circ 30'$, verifying your answer by the tables.

6. Prove that

$$\frac{\tan\frac{A-B}{2}}{\tan\frac{A+B}{2}} = \frac{a-b}{a+b},$$

and apply this result in the solution of the triangle in which

$$a = 39{\cdot}8,$$
$$b = 44{\cdot}2,$$
$$C = 38^\circ 15'.$$

7. From the top D of a tower CD, 200 feet high, the bearings of two points A and B on a horizontal plane are observed to be due N. and due E. Their angles of depression are 20° and 30°. Find the area of the triangle ABC and the length of AB.

8. Find expressions for the inscribed radius r and the circumscribed radius R of a triangle in terms of the sides.

Prove that

$$2Rr(a+b+c) = abc.$$

EXAMINATION FOR THE PETER NICOL RUSSELL SCHOLARSHIPS FOR MECHANICAL AND ELECTRICAL ENGINEERING.

The papers are the same as those set in the Entrance Examination for Law, Medicine, Science and Engineering, with the addition of the following :—

APPLIED MECHANICS.

1. Explain the following terms:—Limit of elasticity, coefficient of elasticity, yield point, tensile, compressive, shearing and torsional stress, modulus of rupture, coefficient of rigidity. Give numerical values for cast-iron and structural steel.

2. Investigate the equations of bending moments and shearing stresses in the following cases, and sketch diagrams showing the distribution of the stresses.
   (*a*) A beam supported at each end and loaded with a uniformly distributed load.
   (*b*) A beam supported at each end and loaded unsymmetrically with a uniformly distributed load over one half of the span.
   (*c*) A beam supported at each end and loaded at four points dividing the beam into five equal parts.
   (*d*) A beam supported at two points 6 feet apart, and overhanging on each side 3 feet, loaded with a uniformly distributed load extending over the 6 feet between the supports; also loaded at the ends with 10 tons.

3. Investigate the intensity of shearing stress in a rectangular timber beam, and obtain the equation:—

   $$\text{Intensity of stress} = \frac{S}{2I}(y_1^2 - y^2)$$

   In a beam of yellow pine timber the modulus of rupture in 7000 lbs. per square inch, and the horizontal shearing resistance 250 lbs. per square inch. What is the ratio of span to depth for a distributed load, in order that the

beam should just be on the point of failing by horizontal shearing stress, at the same time as it fails by direct stresses in bending.

4. What do you understand by the terms:—Velocity ratio, mechanical advantage, and efficiency of a machine?

   In a three-sheaved pulley block, the pull P on the rope was 110 lbs., and the weight lifted W was 369 lbs. What was the mechanical efficiency? And if the friction were 80 % of its former value when reversed, what would be the reversal efficiency, and what resistance would have to be applied to the rope in order to allow the weight to gently lower?

5. Find the quantity of water delivered and horse-power required to drive a single-acting pump, working under the following conditions:—Diameter of pump-barrel, 2 feet; length of stroke, 6 feet; slip, 4 per cent.; head of water on pump, 50 feet, exclusive of friction; speed of flow in main, 3 feet per second; length of main, 1 mile; strokes of pump, 20 per minute; mechanical efficiency, 80 per cent.

6. Describe and illustrate with neat sketches, either a modern screw-cutting lathe or a planing machine.

CHEMISTRY.

1. What do you understand by the terms oxidation and combustion? What are the principal changes which take place during the combustion of a piece of coal?

2. What are the chief impurities usually present in rain, river and spring waters respectively? How can such waters be purified?

3. How could you prove the composition of hydrochloric acid by analysis and by synthesis?

4. How are the atomic weights of the elements ascertained?

5. Why are the elements divided into non-metals and metals?

6. How does the element iron occur in nature? Briefly describe with equations the process for extracting it from its ores.

7. Why are the metals calcium, strontium and barium classed together?

8. How could you detect the presence of the following in a mixture, viz. :—Tin, antimony, manganese, potassium, sulphur, chlorine and silica?

9. How much carbon dioxide by weight and by volume at 21°C and 720 mm. pressure would be formed by the combustion of 1 kilogramme of coal gas containing 30 per cent. of carbon by weight?

   If the combustion occurred in a closed room 10 x 10 x 10 metres in size, what would be the proportion of carbon dioxide in the air when the combustion was finished? Would the air be fit to breathe?

   H=1, C=12, O=16. 1 litre of H at 0°C and 760 mm. weighs ·09 gramme.

PHYSICS.—PART I.

1. Give an explanation of the apparent attractions or repulsions of small floating bodies on the surface of a liquid.

2. Describe an experiment for determining the compressibility of a liquid.

3. Explain, with illustrations, the effect of pressure on the melting point.

4. What is meant by the expression "the mechanical equivalent of heat?" Describe, in detail, an experiment for the determination of the constant.

5. Explain the meaning of the term resonance in connection with vibratory systems.

6. Give illustrations of interference in connection with wave motion, and explain the phenomena.

7. Describe the construction of an achromatic system of lenses, and explain why such a construction is used.

PHYSICS.—PART II.

1. Describe the earth's magnetic field at Sydney, defining any magnetic terms you use.

2. Define the terms unit magnetic pole, moment of a magnet, magnetic force at a point in air, intensity of magnetisation.

3. Describe and give an explanation of the facts of electrification by induction.

4. Explain how the potential of an isolated conductor varies with its charge, and explain the meaning of the expression "the capacity of the conductor."

5. Describe Œrsted's discovery of the magnetic forces associated with currents. Give the magnitude and direction of the force in some particular case.

6. Find an expression for the heat produced in a given time by a current flowing along a wire. For each quantity in the expression state the unit of measurement.

7. Explain, with full detail, how a metallic article is electroplated.

8. Describe, with full theoretical and practical detail, any measurement of an electrical quantity which you have carried out.

MECHANICAL DRAWING.

The drawings are to be in pencil, on the paper provided, to a scale of full size. Neat and accurate drawing is essential, and candidates should note that the sketch given is not necessarily to scale.

Section lines are to be drawn freehand, and should be appropriate to the materials used.

Given the sectional elevation of a steam cylinder and slide valve, suitable for a vertical engine, you are required to—

(*a*) Hatch the parts in section in the given sketch, naming on the sketch the material used in the construction of the various parts, such as studs, glands, rods, bushes, etc.

(*b*) Draw a sectional elevation on A.B.

(*c*) Draw a section on C.D.

(*d*) Indicate by red lines the surfaces to be machined.

(*e*) Write a description of the manner in which the valve distributes the steam, lettering your drawings for reference, and comment generally on the design, drawing attention to any errors you may discover.

W. E. Smith, Printer to the University, Bridge Street, Sydney.